YAZAKI PART NO.	COLOR
7122-8307	NATURAL
7122-8307-30	BLACK
7122-8307-60	GREEN
7122-8307-90	BLUE

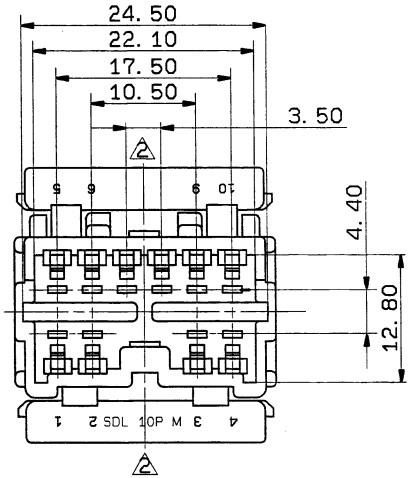

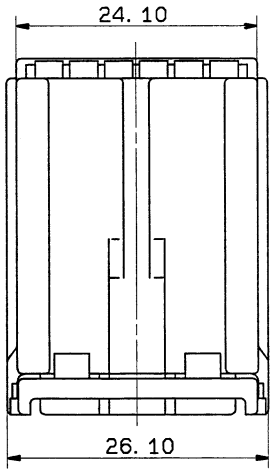

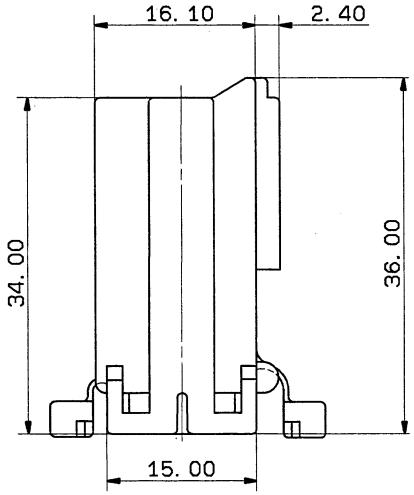

注記

1. 嵌合相手品番 : 7123-8307 ETC.
2. 適用ターミナル品番 : 7114-1470 ETC.
: 7114-1475 ETC.

NOTES

1. MATING PART NO : 7123-8307 ETC.
2. MATING TERMINAL NO. : 7114-1470 ETC.
: 7114-1475 ETC.

ISSUE MARK

LET	DATE	REVISION RECORD	NO.	CHKD
2	93. 07. 26	ADDED STAMP & RENEW	C93-L770	T. M
1	91. 01. 14	ADDED PART NO. & RENEW	C91-6034	S. I
	87. 10. 02	NEW	7MC-0609	H. S

GENERAL TOLERANCE

	10MAX	50MAX	100MAX	250MAX	2500VR	ANGLE	ECCENT
A	±0. 15	±0. 2	±0. 3	±0. 5	±0. 75	±30'	0. 1
B	±0. 2	±0. 3	±0. 55	±0. 95	±1. 4	±30'	0. 1
C	±0. 3	±0. 5	±0. 8	±1. 4	±2	±30'	0. 15

SPECIFIED

MASS g

CUSTOMER

CUSTOMER PART NO. | CUSTOMER DWG NO.

OFFICE | TRIAL PART NO.

VENDOR

VENDOR NO.

DWG TYPE	DWG SOURCE	DWG DATE	UNIT	SCL	ANGLE
R	NEW	87. 10. 02	mm	2/1	3

APPROVED	CHECKED	CHECKED	DESIGN	DRAWN
齋藤		前島	H. SAITOH	ISHIZUKA
93. 7. 26		93. 07. 26	87. 10. 02	93. 07. 26

MATL. SPEC. PBT

TREAT. & FIN.

NAME SDL TYPE CONNECTOR HOUSING 10P (M)

PART NO. 7122-8307 ETC.

DWG NO. 7122-8307:R

YAZAKI CORPORATION