注記

1. かん合相手品番:7118-3110 ETC.
2. 適用端子品番 :7114-1050 ETC.

NOTE

1. MATING PART NO. : 7118-3110 ETC.
2. APPLICABLE TERMINAL PART NO. : 7114-1050 ETC.

| | YAZAKI PART NO. AND CH. CODE | COLOR |
|---|---|---|
| | 7118-3110 | NATURAL |
| 2 | 7118-3110-90 | BLUE |
| 3 | 7118-3110-50 | ORANGE |
| 4 | 7118-3110-60 | GREEN |
| 4 | 7118-3110-70 | YELLOW |
| 4 | 7118-3110-80 | BROWN |
| 5 | 7118-3110-30 | BLACK |
| 6 | 7118-3110-10 | DARK GRAY |
| 7 | 7118-3110-40 | LIGHT GRAY |

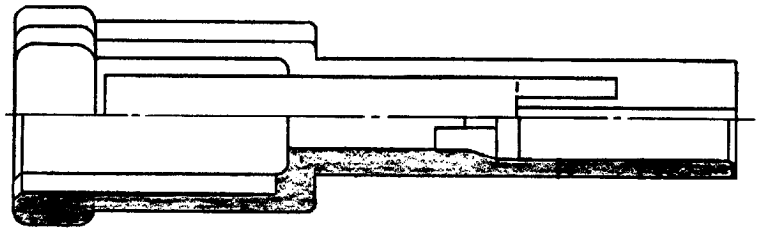

SEC. A-A

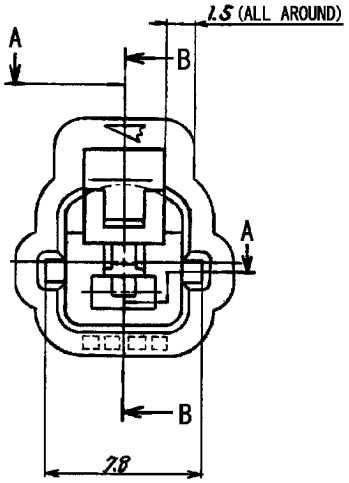


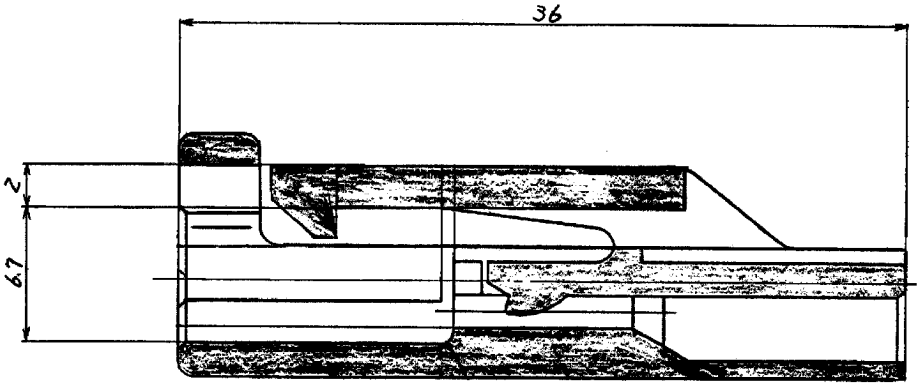


SEC. B-B

| LET | DATE | REVISION RECORD | NO. | CHKD |
|---|---|---|---|---|
| 8 | 2011/03/08 | REPLACED DRAWING ETC. | C11-Z176 | K.K |
| 7 | 1988/11/28 | ADDED COLOR PART NO. | 8MC-1638 | 山本久 |
| 6 | 1988/04/21 | ADDED COLOR PART NO. | 8MC-0450 | 山本久 |
| 5 | 1986/04/02 | ADDED COLOR PART NO. | C86-5393 | 及川 |
| 4 | 1982/04/26 | ADDED PART NO. | C82-2389 | 佐原 |
| 3 | 1981/06/25 | ADDED COLOR PART NO. | C81-2538 | 山田 |
| 2 | 1980/07/17 | ADDED BLUE COLOR PART NO. | C80-2467 | 兼子 |
| 1 | 1980/01/29 | CHANGED FORM | C80-2016 | 兼子 |
| | 1979/06/04 | NEW | C9-2288 | 兼子 |

8 GENERAL TOLERANCE

| | 10MAX | 50MAX | 100MAX | 250MAX | 2500VR | ANGLE | ECCENT |
|---|---|---|---|---|---|---|---|
| A | ±0.15 | ±0.2 | ±0.3 | ±0.5 | ±0.75 | ±30' | 0.1 |
| B | ±0.2 | ±0.3 | ±0.55 | ±0.95 | ±1.4 | ±30' | 0.1 |
| C | ±0.3 | ±0.5 | ±0.8 | ±1.4 | ±2 | ±30' | 0.15 |

SPECIFIED | MASS

ISSUE MARK

| | | | | | |
|---|---|---|---|---|---|
| CUSTOMER | | | | | |
| CUSTOMER PART NO. | | CUSTOMER DWG NO. | | | |
| OFFICE | | TRIAL PART NO. | | | |
| VENDOR | | | | | |
| VENDOR NO. | | | | | |
| DWG TYPE | DWG SOURCE | DWG DATE | UNIT | SCL | ANGLE |
| R | NEW | 1979/06/04 | mm | FREE | 3 |
| APPROVED | CHECKED | CHECKED | DESIGN | DRAWN | |
| M. FUKUDA | O. SUGIYAMA | K. KIDA | KANEKO | R. MAJERANO | |
| 2011/03/08 | 2011/03/08 | 2011/03/08 | 1979/06/04 | 2011/03/08 | |

MATL. SPEC. 66NYLON

TREAT. & FIN.

NAME 8 PA 1P MALE HOUSING

PART NO. / CH. CODE 7118-3110 ETC.

DWG NO. 7118-3110:R

SET DWG NO.

YAZAKI CORPORATION