PART NO. AND CH. CODE	⚠2 W1 ±0.4	⚠2 W2 ±0.4	H1	H2	A	B	WIRE SIZE	⚠5 MATERIAL
⚠1 7116-4030 (7B16-4030)	2.90	3.90	⚠2 (2.62)	⚠2 (3.43)	3.00	6.20	AVS/CAVS 0.3～0.5 CHFUS 0.35～0.5,HFSS 0.5	BRASS(t=0.40)
⚠1 7116-4031 (7B16-4031)	3.60	4.70	⚠2 (3.34)	⚠2 (4.20)	4.00	7.20	AVS 0.5～1.25,AVSS 0.75～1.25 CAVS 0.85～1.25,CHFUS/HFSS 0.75～1.5	BRASS(t=0.40)
7116-4032	4.90	6.40	⚠2 (4.63)	⚠2 (5.66)	4.00	7.20	AVS 2～3 HFSS 2,HF 3	BRASS(t=0.40)
⚠5 7196-1064-02	4.90	6.40	(4.63)	(5.66)	4.00	7.20	AVS 2～3 IVSSH 3	COPPER ALLOY(t=0.40)

注記

1. かん合相手品番：7114-4030 ETC.
2. ⚠1 ( )内品番は、エアバック回路及び特別管理回路に使用する時に適用すること。

NOTES

1. MATING PART NO.:7114-4030 ETC.
2. ⚠1 ( )PART NO. IS USED FOR PARTS ASSOCIATED WITH A/B CIRCUITS OR OTHER SPECIFIED CIRCUIT.

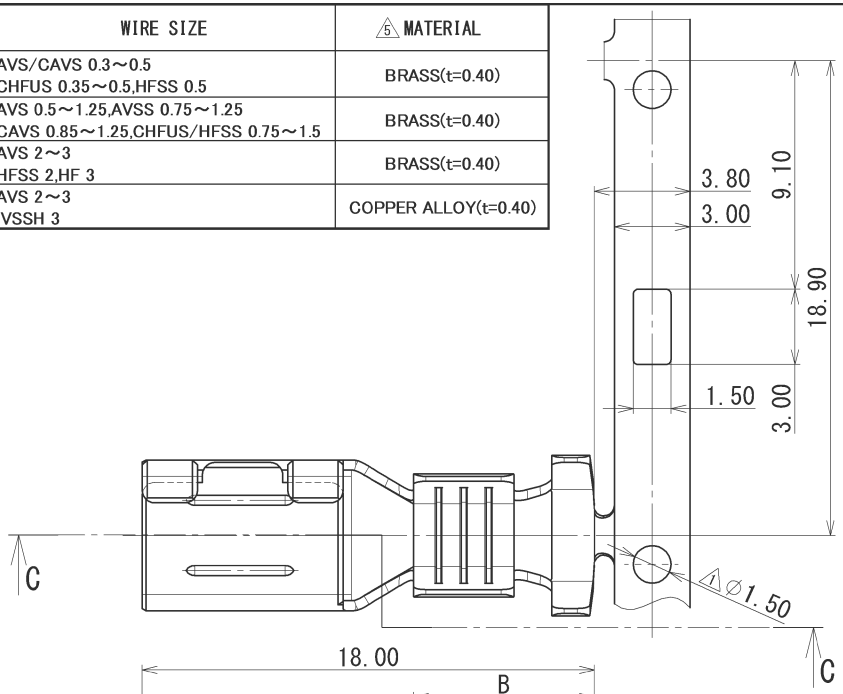

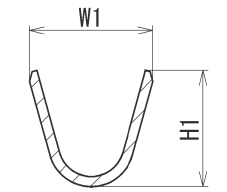

SEC. K-K

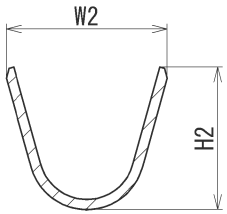

SEC. M-M

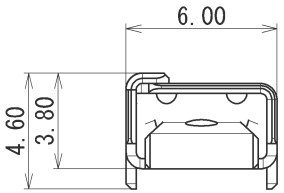

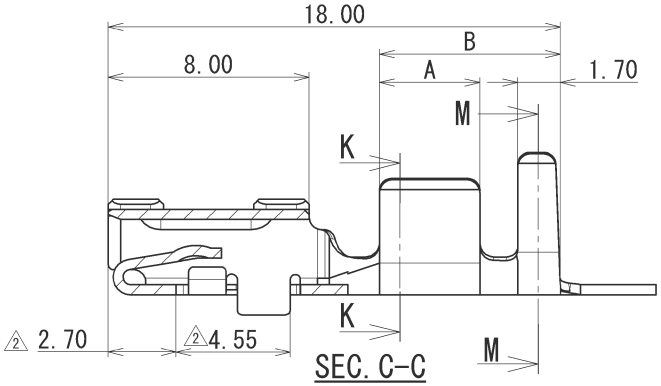

SEC. C-C

LET	DATE	REVISION RECORD	NO.	CHKD
⚠5	2016/11/28	ADDED PART NO.	C16-P295	M. S
⚠4	2007/02/19	CORRECTION OF CLERICAL ERROR	C07-Z148	H. I
⚠3	2006/12/19	CHANGED WIRE SIZE, ETC.	C06-ZD41	H. I
⚠2	1998/07/18	CHANGED DIMENSION & NOTE	C97-N460	H. K
⚠1	1997/01/20	CHANGED FORM & ADDED A/B PART NO.	C97-L057	H. K
	1988/12/24	NEW	C89-L002	K. J

GENERAL TOLERANCE

	10MAX	50MAX	100MAX	250MAX	2500VR	ANGLE	ECCENT
A	±0.15	±0.2	±0.3	±0.5	±0.75	±30'	0.1
B	±0.2	±0.3	±0.55	±0.95	±1.4	±30'	0.1
Ⓒ	±0.3	±0.5	±0.8	±1.4	±2	±30'	0.15

SPECIFIED

MASS

CUSTOMER	
CUSTOMER PART NO.	CUSTOMER DWG NO.
OFFICE	TRIAL PART NO.
VENDOR	
VENDOR NO.	

DWG TYPE	DWG SOURCE	DWG DATE	UNIT	SCL	ANGLE
R	NEW	1988/11/14	mm	5:1	3

APPROVED	CHECKED	CHECKED	DESIGN	DRAWN
S. SUZUKI	M. NAGANO	Y. IKEDA	SUEYOSHI	M. SUZUKI
2016/11/28	2016/11/28	2016/11/28	1987/03/04	2016/11/28

ISSUE MARK

MATL. SPEC. ⚠5 SEE TABLE

TREAT. & FIN. ⚠5 TIN PLATING

NAME ⚠3 4.8 TERMINAL FEMALE

PART NO. CH. CODE ⚠1 7116-4030 ETC. (7B16-4030 ETC.)

DWG NO. 7116-4030:R

SET DWG NO.

YAZAKI CORPORATION