⚠2 YAZAKI PART NO.	MATERIAL
7116-2030	BRASS t=0.4
7116-2030-02	BRASS t=0.4 TIN PLATED

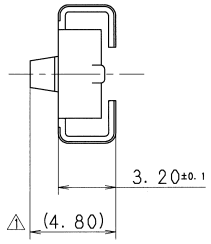

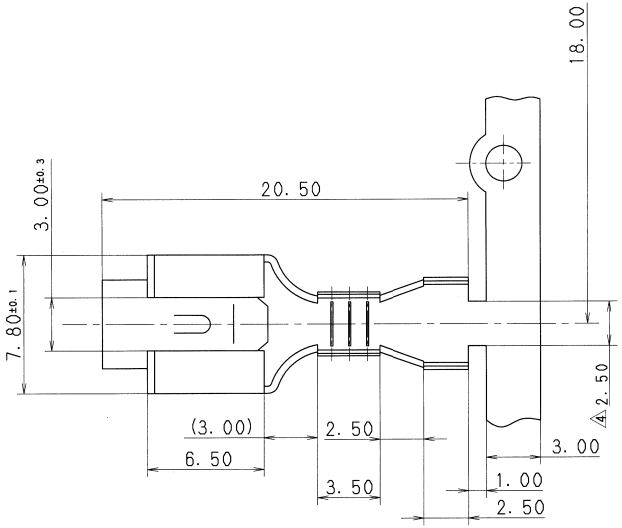

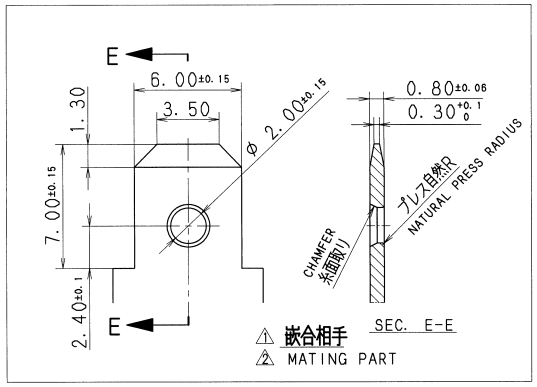

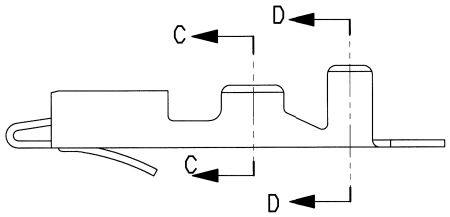

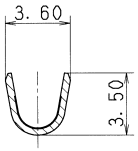

SEC. C-C

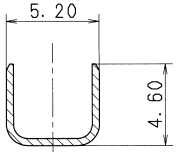

SEC. D-D

注記

1) 適用電線サイズは 0.5~2とする。

⚠2 NOTE

1) APPLICABLE WIRE SIZE:0.5~2

LET	DATE	REVISION RECORD	NO.	CHKD
⚠4	08.08.26	CHANGED PART NAME, ETC.,	C08-Z625	T.E
⚠3	02.10.14	CORRECTION OF NOTES.	C02-Q444	N.K
⚠2	93.11.09	ADDED PART NO. ETC.	C93-7091	Y.I
⚠1	92.11.25	CHANGED FORM & RENEW	C92-7228	I.K
-	79.07.25	NEW	C79-2366	T.I

GENERAL TOLERANCE

	10MAX	50MAX	100MAX	250MAX	2500VR	ANGLE	ECCENT
A	±0.15	±0.2	±0.3	±0.5	±0.75	±30′	0.1
B	±0.2	±0.3	±0.55	±0.95	±1.4	±30′	0.1
C	±0.3	±0.5	±0.8	±1.4	±2	±30′	0.15

SPECIFIED ±0.2 ANGLE:±30° ECCENT:±0.1 MASS g

CUSTOMER					
CUSTOMER PART NO.		CUSTOMER DWG NO.			
OFFICE		TRIAL PART NO.			
VENDOR					
VENDOR NO.					
DWG TYPE	DWG SOURCE	DWG DATE	UNIT	SCL	ANGLE
R	NEW	79.07.25	mm	5/1	3
APPROVED	CHECKED	CHECKED	DESIGN	DRAWN	
川野	T.MIWA 三輪	T.ENDO 遠藤	—	J.GALLARES	
08.08.29	08.08.27	08.08.27		08.08.26	

MATL. SPEC. ⚠2 SEE TABLE

TREAT. & FIN.

NAME ⚠4 250 TERMINAL FEMALE

PART NO. ⚠2 7116-2030 ETC.

DWG NO. 7116-2030-02:R

YAZAKI CORPORATION

ISSUE MARK