PART NO. AND CH. CODE	R_1	R_2	W_1	W_2	MATL. & SPEC.	WIRE SIZE (mm²)	WIRE DIAMETER UNSEALED	WIRE DIAMETER SEALED
7116-4720-02	0.30	0.80	1.80	2.90	COPPER ALLOY TIN PLATING (t=0.25)	0.22 ~ 0.35	φ 1.10 ~ 1.70	φ 1.40 ~ 1.70
7116-4721-02	0.40	0.90	2.20	3.40	③ COPPER ALLOY TIN PLATING (t=0.25)	0.5 ~ 0.75	φ 1.40 ~ 2.20	φ 1.40 ~ 2.20
①7116-4720-08	0.30	0.80	1.80	2.90	③ COPPER ALLOY GOLD PLATING (t=0.25)	0.22 ~ 0.35	φ 1.10 ~ 1.70	φ 1.40 ~ 1.70
①7116-4721-08	0.40	0.90	2.20	3.40	COPPER ALLOY GOLD PLATING (t=0.25)	0.5 ~ 0.75	φ 1.40 ~ 2.20	φ 1.40 ~ 2.20

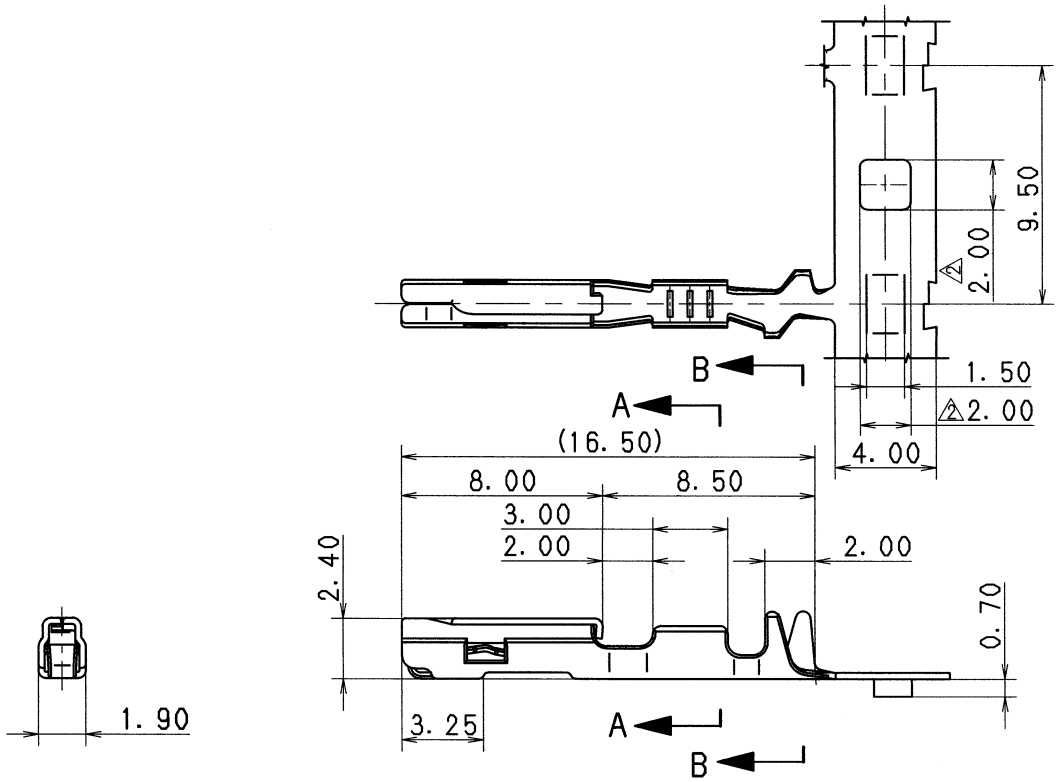

注記

1. 嵌合相手端子品番 :7114-4720-02 ETC.

NOTES

1. MATING PART NO. :7114-4720-02 ETC.

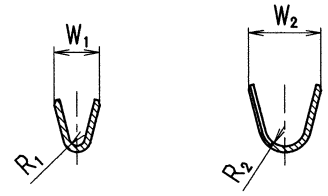

SEC. A-A SEC. B-B

LET	DATE	REVISION RECORD	NO.	CHKD
③	03.07.07	CORRECTION OF A CLERICAL ERROR	C03-Q342	N.S
②	01.10.02	REVISED DIMENSION	C01-X983	N.S
①	01.07.31	ADDED PART NO.	C01-X746	N.S
	01.03.30	NEW	C01-X349	N.S

ISSUE MARK

GENERAL TOLERANCE

	10MAX	50MAX	100MAX	250MAX	2500VR	ANGLE	ECCENT
A	±0.15	±0.2	±0.3	±0.5	±0.75	±30′	0.1
B	±0.2	±0.3	±0.55	±0.95	±1.4	±30′	0.1
Ⓒ	±0.3	±0.5	±0.8	±1.4	±2	±30′	0.15

SPECIFIED

MASS g

CUSTOMER

CUSTOMER PART NO. | CUSTOMER DWG NO.

OFFICE | TRIAL PART NO.

VENDOR

VENDOR NO.

DWG TYPE	DWG SOURCE	DWG DATE	UNIT	SCL	ANGLE
R	NEW	01.03.30	mm	5/1	3

APPROVED	CHECKED	CHECKED	DESIGN	DRAWN
Takeuchi		N. Sugie	N. SUGIE	K. nonami
'03.07.09	03.7.7	03.7.7	00.12.07	03.07.07

MATL. SPEC. SEE TABLE | TREAT. & FIN.

NAME 0.64 SYSTEM CONNECTOR FEMALE TERMINAL

PART NO. CH. CODE 7116-4720-02 ETC.

DWG NO. 7116-4720-02:R | SET DWG NO.

YAZAKI CORPORATION