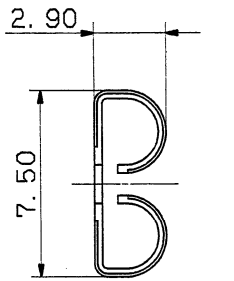

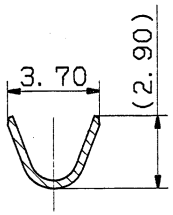

SEC. B-B

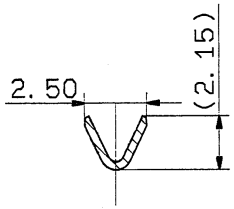

SEC. A-A

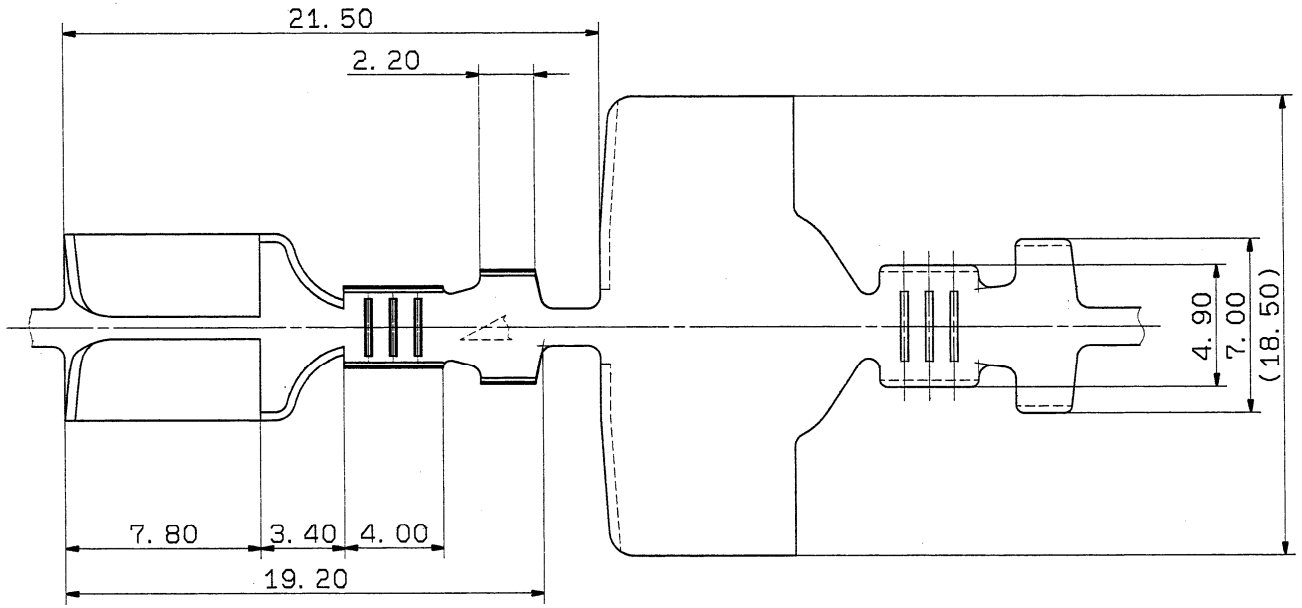

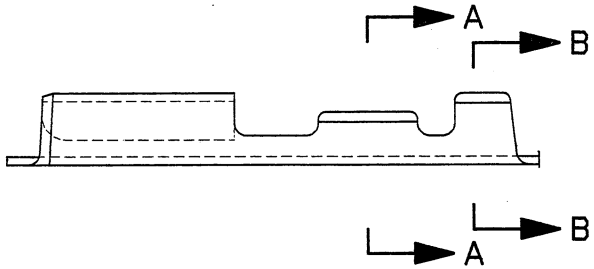

NOTES

1) APPLICABLE WIRE SIZE : AVS 0.3~0.5
2) MATING PART NO. : 7114-2630-02 ETC.
3) MATERIAL: COPPER ALLOY t=0.32
GLOSS TIN PLATING

注記

1) 適用電線サイズ: AVS 0.3~0.5
2) 嵌合相手品番 : 7114-2630-02 ETC.
3) 材料 : 銅合金 t=0.32 光沢スズメッキ条材

ISSUE MARK

LET	DATE	REVISION RECORD	NO.	CHKD
	95.09.08	NEW	C95-M339	K.O

GENERAL TOLERANCE

	10MAX	50MAX	100MAX	250MAX	2500VR	ANGLE	ECCENT
A	±0.15	±0.2	±0.3	±0.5	±0.75	±30'	0.1
B	±0.2	±0.3	±0.55	±0.95	±1.4	±30'	0.1
©	±0.3	±0.5	±0.8	±1.4	±2	±30'	0.15

SPECIFIED

MASS g

CUSTOMER
CUSTOMER PART NO. | CUSTOMER DWG NO.
OFFICE | TRIAL PART NO.
VENDOR
VENDOR NO.

DWG TYPE	DWG SOURCE	DWG DATE	UNIT	SCL	ANGLE
R	NEW	95.09.08	mm	2/1	3

APPROVED	CHECKED	CHECKED	DESIGN	DRAWN
			M. YAMAMOTO	TSURUTA
95.09.12	95.09.12	95.09.12	95.04.21	95.09.08

MATL. SPEC. SEE NOTES | TREAT. & FIN.

NAME 250 TERMINAL FEMALE (6.0MM)

PART NO. / CH. CODE 7116-2643-02

DWG NO. 7116-2643-02:R

YAZAKI CORPORATION