PART NO. AND CH. CODE	②L_4	H_1	H_2	W_1	R_1	W_2	R_2	WIRE SIZE (mm²)
7114-4110-02, Ⓐ	13.00	③(2.45)	③(3.55)	2.30	0.45	2.80	0.45	④0.3~0.6 OR EQUIVALENT
7114-4111-02, Ⓐ	13.00	③(3.25)	③(4.45)	3.00	0.65	3.60	0.65	④0.75~1.25 OR EQUIVALENT
7114-4112-02, Ⓐ	13.00	③(4.00)	③(5.50)	3.70	0.85	4.60	0.90	1.5 ~2.5 OR EQUIVALENT
②7114-4113-02, Ⓐ	18.50	(5.40)	(7.05)	4.90	1.50	6.50	1.50	3.0 ~5.0 OR EQUIVALENT

注 記

1. 嵌合相手品番：7116-4110-02 ETC.
③2. 7114-4113-02においての通電電流値は、2.5 mm²電線相当以下とする。
③3. 7114-4113-02に5 mm²電線を圧着して使用する場合には、専用ハウジングが必要となります。

NOTES

1. MATING PART NO. :7116-4110-02 ETC.
③2. CURRENT FOR 7114-4113-02 SHALL BE THE CURRENT FOR 2.5 mm² WIRE OR UNDER.
③3. IN CASE 5 mm² WIRE IS CRIMPED WITH THE TERMINAL 7114-4113-02, SPECIAL HOUSING IS REQUIRED.

APPLICABLE WIRE SIZE MARK

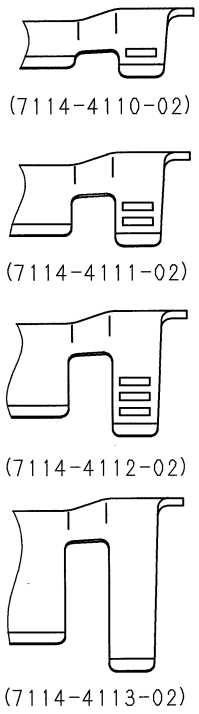

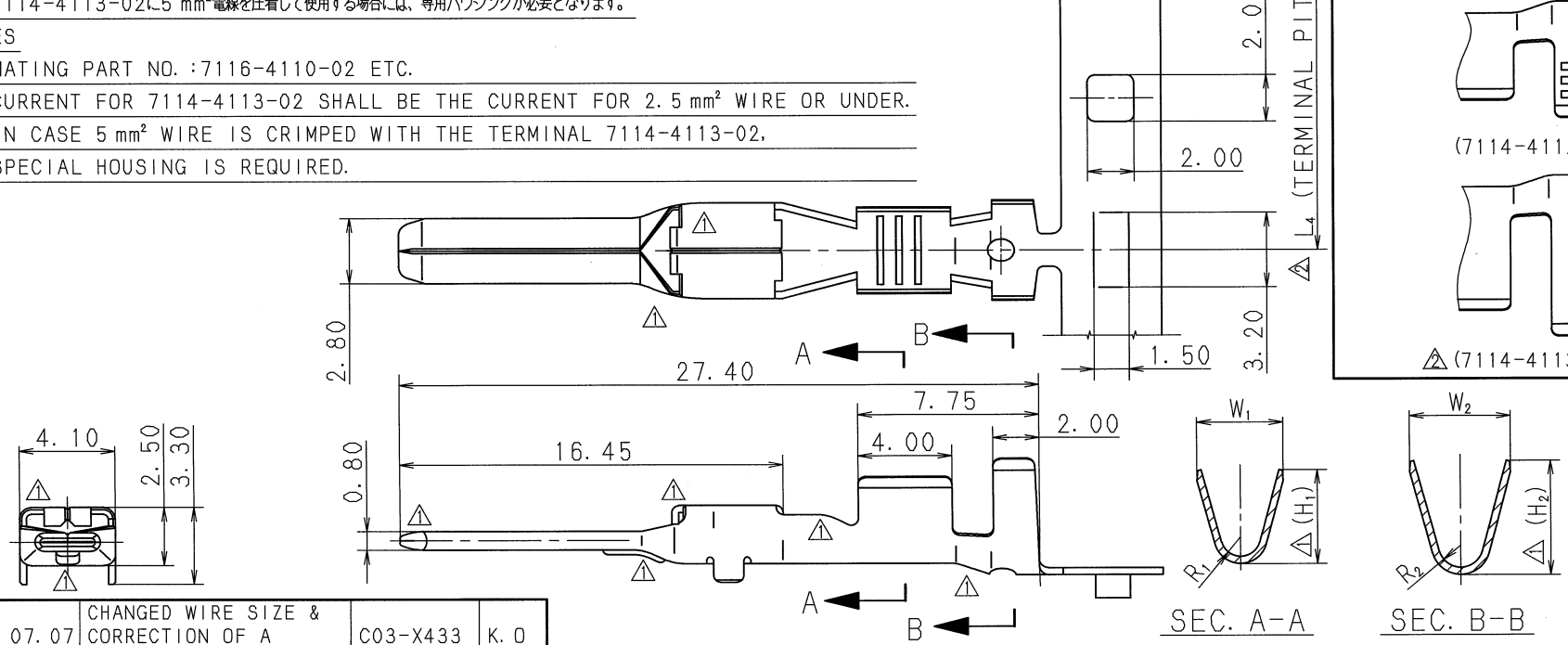

LET	DATE	REVISION RECORD	NO.	CHKD
④	03.07.07	CHANGED WIRE SIZE & CORRECTION OF A CLERICAL ERROR	C03-X433	K.O
③	99.10.11	ADDED NOTE ETC.	C99-7133	T.S
②	99.02.17	ADDED PART NO. ETC.	C99-L408	Y.U
①	97.07.25	CHANGED FORM, Ⓐ	C97-M151	H.K
—	95.07.25	NEW	C95-M193	Y.U

GENERAL TOLERANCE

	10MAX	50MAX	100MAX	250MAX	2500VR	ANGLE	ECCENT
A	±0.15	±0.2	±0.3	±0.5	±0.75	±30′	0.1
B	±0.2	±0.3	±0.55	±0.95	±1.4	±30′	0.1
Ⓒ	±0.3	±0.5	±0.8	±1.4	±2	±30′	0.15

SPECIFIED

MASS g

ISSUE MARK

CUSTOMER

CUSTOMER PART NO. | CUSTOMER DWG NO.

OFFICE | TRIAL PART NO.

VENDOR

VENDOR NO.

DWG TYPE	DWG SOURCE	DWG DATE	UNIT	SCL	ANGLE
R	NEW	95.07.25	mm	④5/1	3

APPROVED	CHECKED	CHECKED	DESIGN	DRAWN
外之内	土山	内牟禰	Y. UCHIDA	Y. OHKUBO 原
'03.8.20	'03.8.20	'03.8.19	95.05.31	03.07.07

MATL. SPEC. COPPER ALLOY t=0.3 (TIN PLITING) | TREAT. & FIN.

NAME ②2.8 SYSTEM CONNECTOR MALE TERMINAL

PART NO. CH. CODE 7114-4110-02 ETC.

DWG NO. 7114-4110-02:R | SET DWG NO.

YAZAKI CORPORATION