PART NO. AND CH. CODE	W_1	W_2	H_1	H_2	R_1	R_2	L	⑤(REFERENCE) WIRE SIZE (mm²)
7114-4100-02	2.50	2.80	(2.40)	(3.50)	0.45	0.45	9.10	⑤ 0.3~0.5 EQUIVALENT
7114-4101-02	3.30	3.40	(3.25)	(4.10)	0.65	0.65	9.90	⑤ 0.6~1.25, 0.35+0.35, 0.35+0.5 EQUIVALENT
7114-4104-02	③3.40	3.70	(3.25)	(4.60)	0.65	0.65	10.90	⑤ 0.35+0.75, 0.5+0.5 1.5 EQUIVALENT

⑥GENERAL TOLERANCE

	10MAX	50MAX	100MAX	250MAX	2500VR	R5MAX	R10MAX	R20MAX	R200VR	ANGLE	ECCENT
A	±0.15	±0.2	±0.3	±0.5	±0.75	±0.2	±0.3	±0.5	±2.5	±3°	0.1
B	±0.2	±0.3	±0.55	±0.95	±1.4					±3°	0.1
Ⓒ	±0.3	±0.5	±0.8	±1.4	±2					±3°	0.15

注記

1. 嵌合端子品番：7116-4100-02 ETC.
2. 7114-4104-02においての通電電流値は、1.0 mm²相当以下とする。

NOTES

1. MATING TERMINAL NO. :7116-4100-02 ETC.
2. CURRENT FOR 7114-4104-02 SHALL BE THE CURRENT FOR 1.0 mm² WIRE OR LESS.

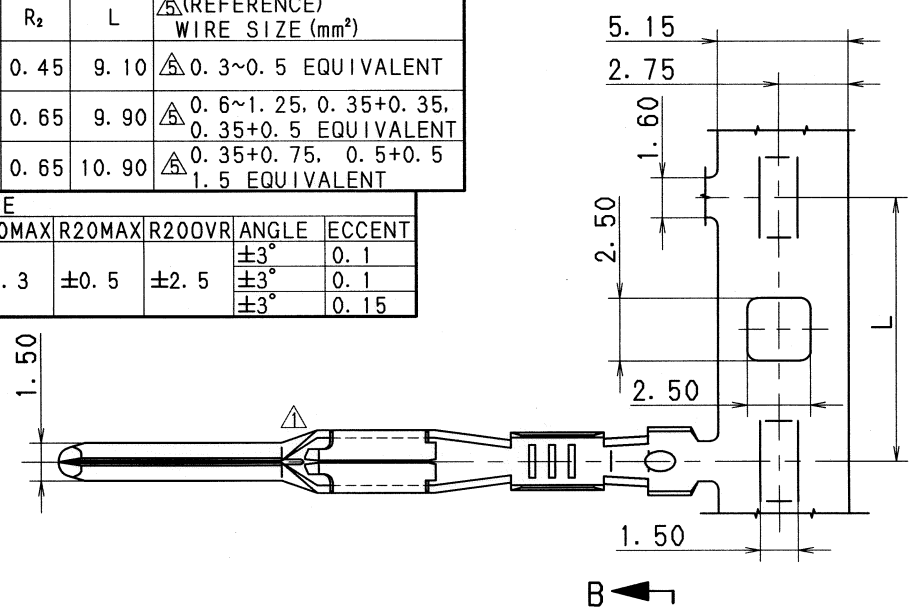

APPLICABLE WIRE SIZE MARK

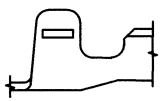

(7114-4100-02)

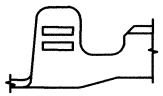

(7114-4101-02)

(7114-4104-02)

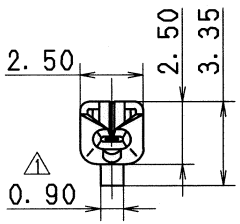

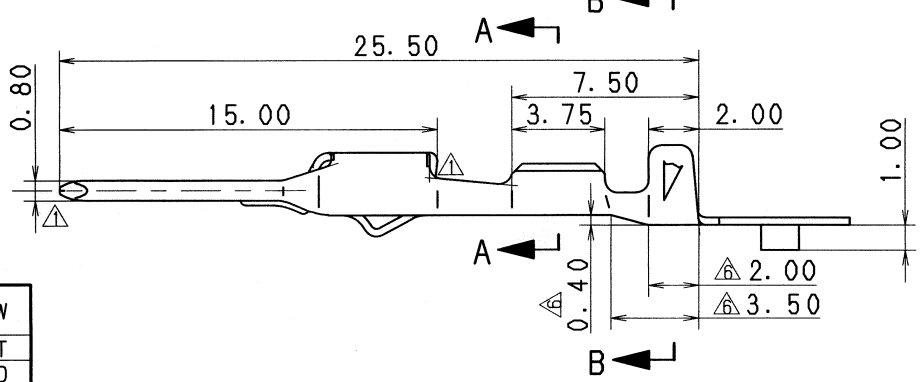

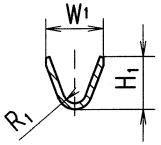

SEC. A-A

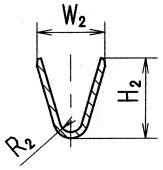

SEC. B-B

LET	DATE	REVISION RECORD	NO.	CHKD
⑥	05/10/18	CHANGED GENERAL TOLERANCE TABLE, ETC.	C05-ZD50	Y.W
⑤	04/06/25	CHANGED WIRE SIZE	C04-Z636	H.T
④	03/07/07	CHANGED WIRE SIZE	C03-X434	K.O
③	00/11/09	CORRECTION OF A CLERICAL ERROR	C00-M343	E.O
②	99/06/15	CHANGED WIRE SIZE & ADDED NOTE	C99-L932	H.O
①	96/01/09	CHANGED FORM	C96-L042	A.Y
–	95/09/06	NEW	C95-M058	Y.W

GENERAL TOLERANCE

	10MAX	50MAX	100MAX	250MAX	2500VR	ANGLE	ECCENT
A	±0.15	±0.2	±0.3	±0.5	±0.75	±30′	0.1
B	±0.2	±0.3	±0.55	±0.95	±1.4	±30′	0.1
C	±0.3	±0.5	±0.8	±1.4	±2	±30′	0.15

SPECIFIED

MASS g

ISSUE MARK

CUSTOMER

CUSTOMER PART NO. | CUSTOMER DWG NO.

OFFICE | TRIAL PART NO.

VENDOR

VENDOR NO.

DWG TYPE	DWG SOURCE	DWG DATE	UNIT	SCL	ANGLE
R	NEW	95/09/06	mm	5:1	3

APPROVED	CHECKED	CHECKED	DESIGN	DRAWN
土山	—	和田	K. OHTAKA	O. DAR KONRAD GALIZA
'05.10.25	—	'05.10.24	95/05/29	05/10/18

MATL. SPEC. COPPER ALLOY (t=0.3)

TREAT. & FIN. TIN PLATING

NAME 1.5 SYSTEM CONNECTOR MALE TERMINAL

PART NO. CH. CODE 7114-4100-02 ETC.

DWG NO. 7114-4100-02:R

SET DWG NO.

YAZAKI CORPORATION