STDLIB-SW2014

RUBBER PART GENERAL TOLERANCE	
0 TO 3	±0.3
3 TO 6	±0.4
6 TO 10	±0.5
10 TO 18	±0.6
18 TO 30	±0.8
30 TO 50	±1.0
50 TO 80	±1.2
80 TO 120	±1.4
120 TO 180	±1.6
180 TO 250	±2.0
250 TO 315	±2.5
315 TO 400	±3.0
400 TO 500	±3.5
500 OVER	±0.8%

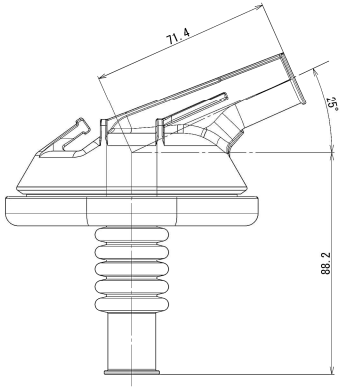

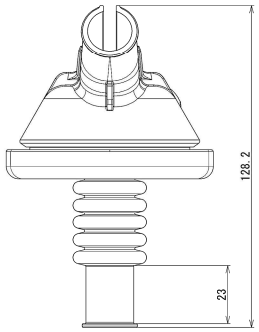

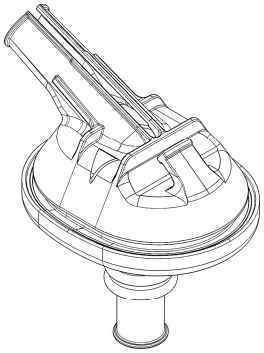

ISOMETRIC VIEW

注記
1. 基本肉厚:t=1.5mm
2. 適用パネル: 62.7X82.8、t=0.9mm
バーリング高さ : 3.5mm(パネル板厚含む)
3. ※φ16拡張寸法=□62以下。

NOTES
1. GENERAL THICKNESS: t=1.5mm
2. APPLICABLE PANEL : 62.7X82.8, t=0.9mm
BURRING HEIGTH : 3.5mm(INCLUDE PANEL THICKNESS)
3. OPEN FROM ※φ16 = □62(MAX).

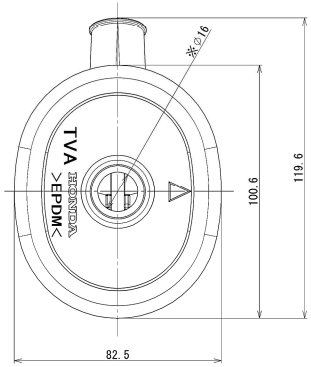

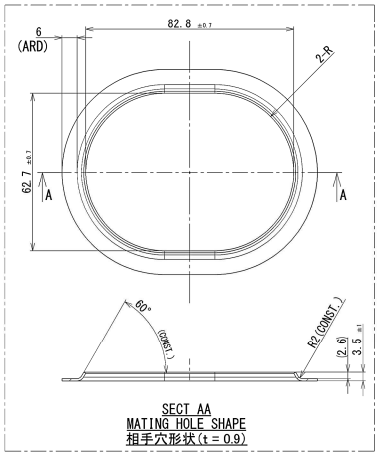

SECT AA
MATING HOLE SHAPE
相手穴形状(t = 0.9)

2D
3D

ISSUE MARK

LET	DATE	REVISION RECORD	CONTROL NO.	CHKD
	16.03.31	NEW	C16-2046	T.S.

GENERAL TOLERANCE						
	10MAX	50MAX	100MAX	250MAX	2500VR	ANGLE	ECCENT
A	±0.15	±0.2	±0.3	±0.5	±0.75	±0.5°	0.1
B	±0.2	±0.3	±0.55	±0.95	±1.4	±1.0°	0.1
C	±0.3	±0.5	±0.8	±1.4	±2.0	±1.5°	0.15
SPECIFIED	SEE RUBBER PART GENERAL TOLERANCE					MASS 106 g	

DWG TYPE	DWG SOURCE	DWG DATE	UNIT	SCL	ANGLE
R	NEW	16.03.31	mm	1:1	3

APPROVED	CHECKED	CHECKED	DESIGN	DRAWN
T.KATSUMATA		T.NOHARA	T.SAITO	T.SAITO
			16.03.31	16.03.31

CUSTOMER	
CUSTOMER PART NO.	CUSTOMER DWG NO.
OFFICE	TRIAL PART NO.
VENDER	
VENDER NO.	

MATL. SPEC. EPDM(BLACK) TREAT. & FIN.

NAME DASH GROMMET B

PART NO. 7075-1809-30

CH. CODE

DWG NO. 7075-1809-30:R

SET DWG NO.

YAZAKI CORPORATION

A1

2016年4月11日 21:53:20