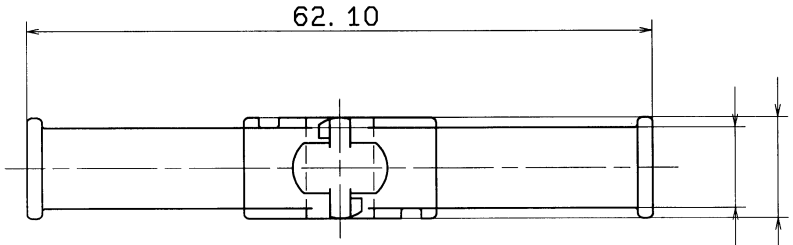

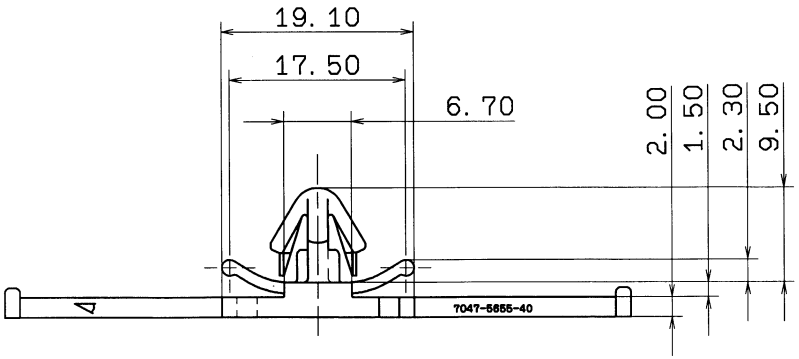

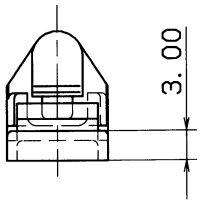

NOTES

1) SPECS OF CLIP A)INSERTION FORCE FOR MATING PANEL :MAX.49N{5Kgf}
B)SEPARATION FORCE FOR MATING PANEL :MIN.176.4N{18Kgf}
C)PANEL HOLE : $7.2^{\pm0.2}\times10^{+0.5}_{0}$
D)PANEL THICKNESS : t=0.6~2.0

注記

1) クリップ仕様 A)パネルへの挿入力 : 49N{5Kgf}以下
B)パネルからの離脱力 : 176.4N{18Kgf}以上
C)パネル穴 : $7.2^{\pm0.2}\times10^{+0.5}_{0}$
D)板厚 : t=0.6~2.0

ISSUE MARK

LET	DATE	REVISION RECORD	NO.	CHKD
1	98.10.22	CHANGED MATERIAL	C98-H088	H.S
	93.06.07	NEW	C93-H361	W.O

GENERAL TOLERANCE

	10MAX	50MAX	100MAX	250MAX	2500VR	ANGLE	ECCENT
A	±0.15	±0.2	±0.3	±0.5	±0.75	±30'	0.1
B	±0.2	±0.3	±0.55	±0.95	±1.4	±30'	0.1
C	±0.3	±0.5	±0.8	±1.4	±2	±30'	0.15

SPECIFIED

MASS g

CUSTOMER
CUSTOMER PART NO.
CUSTOMER DWG NO.
OFFICE
TRIAL PART NO.
VENDOR
VENDOR NO.

DWG TYPE	DWG SOURCE	DWG DATE	UNIT	SCL	ANGLE
R	NEW	93.06.07	mm	2/1	3

APPROVED	CHECKED	CHECKED	DESIGN	DRAWN
浮野	杉本	重上	SASAKI	吳子
'98 10 27	98.10.22	98.10.22	92.11.20	'98.10.22

MATL. SPEC. P.P (DARK GRAY)
TREAT. & FIN.
NAME CLIP (7.2X10, t=0.6~2.0)
PART NO. 7047-5655-40
CH. CODE
DWG NO. 7047-5655-40:R
SET DRW NO.

YAZAKI CORPORATION