NO.	YAZAKI PART NO.	MATERIAL
①	7047-3643	NYLON-66(NATURAL)
②	7047-3643-30	NYLON-66(BLACK)

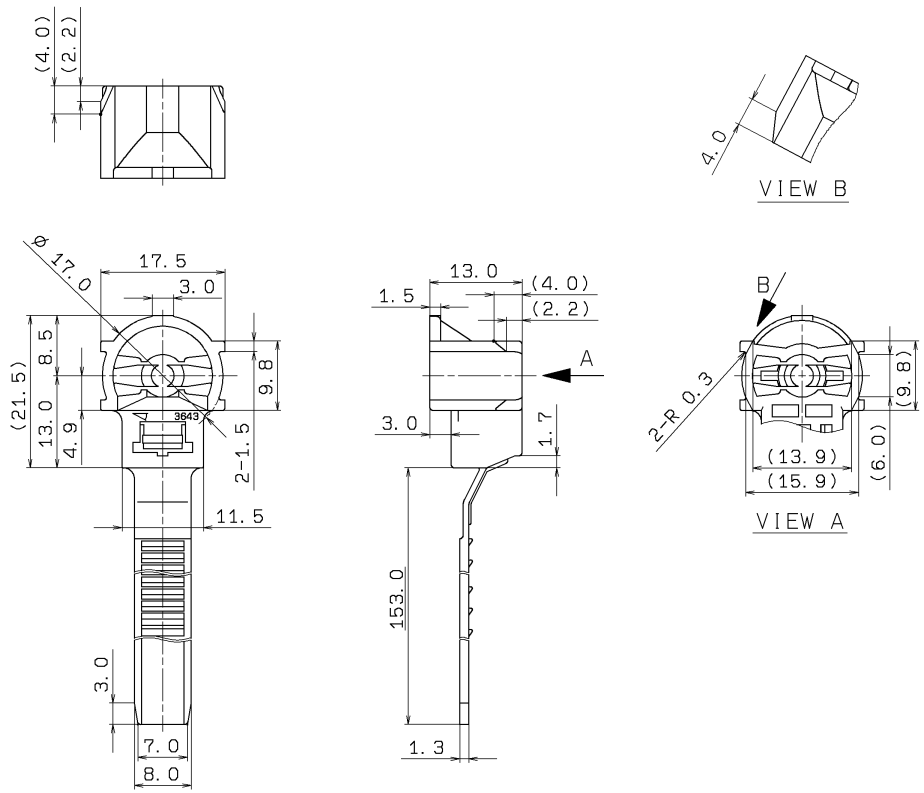

NOTES

1) MUST BE FREE OF FLASH IMPERFECTIONS AND CRACK THAT AFFECT FUNCTION.
2) APPLICABLE : M5, M6
   A) INSERTION FORCE BOLT-M5, M6 : MAX. 44.0N
   B) SEPARATION FORCE BOLT-M5, M6 : MIN. 147.0N
3) APPLICABLE W/H DIA. : ø1.6(CAVS0.5sq 1PC.)~ø35

注 記

1) 機能上有害な バリ ヒケ 割れ 変形等なきこと。
2) 適用ボルト : M5, M6
   A) M5, M6ボルト挿入力 : 44.0N以下
   B) M5, M6ボルト離脱力 : 147.0N以上
3) 適用ハーネス径 : ø1.6(CAVS0.5sq 1本)~ø35

LET	DATE	REVISION RECORD	NO.	CHKD
2	01.11.22	CHANGED FORM	C01-7276	E.O
1	00.11.08	ADDED PART No.	C00-H073	H.K
	99.05.07	NEW	C99-H027	E.O

GENERAL TOLERANCE

	10MAX	50MAX	100MAX	250MAX	2500VR	ANGLE	ECCENT
A	±0.15	±0.2	±0.3	±0.5	±0.75	±30'	0.1
B	±0.2	±0.3	±0.55	±0.95	±1.4	±30'	0.1
Ⓒ	±0.3	±0.5	±0.8	±1.4	±2	±30'	0.15

SPECIFIED

MASS 3.0 g

CUSTOMER
CUSTOMER PART NO. | CUSTOMER DWG NO.
OFFICE | TRIAL PART NO.
VENDOR
VENDOR NO.

DWG TYPE	DWG SOURCE	DWG DATE	UNIT	SCL	ANGLE
R	NEW	99.05.07	mm	2/1	3

APPROVED	CHECKED	CHECKED	DESIGN	DRAWN
	KAMEYAMA	KATAYAMA	OKADA	OKADA
01.11.27	01.11.27	01.11.26	99.04.13	01.11.22

MATL. SPEC. SEE TABLE
TREAT. & FIN. WATER ABSORPTION

NAME CLIP
(STAD BAND M5, M6)

PART NO. / CH. CODE 7047-3643 ETC.
DWG NO. 7047-3643:R
SET DWG NO.

YAZAKI CORPORATION

ISSUE MARK