PART NO. AND CH. CODE	W	H
7017-1180-02	⚠ 3.70	⚠ 3.09
7017-1181-02	4.00	3.75

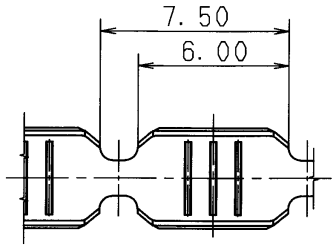

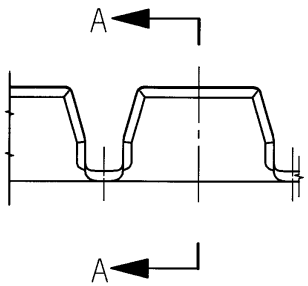

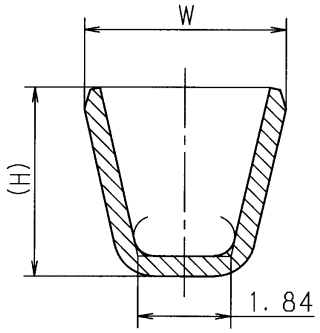

SEC. A-A (10/1)

ISSUE MARK

LET	DATE	REVISION RECORD	NO.	CHKD
⚠	02.06.07	CHANGED FORM	C02-X621	T.S
	00.11.10	NEW	C00-M031	T.S

GENERAL TOLERANCE

	10MAX	50MAX	100MAX	250MAX	2500VR	ANGLE	ECCENT
A	±0.15	±0.2	±0.3	±0.5	±0.75	±30′	0.1
B	±0.2	±0.3	±0.55	±0.95	±1.4	±30′	0.1
Ⓒ	±0.3	±0.5	±0.8	±1.4	±2	±30′	0.15

SPECIFIED

MASS g

CUSTOMER

CUSTOMER PART NO. | CUSTOMER DWG NO.

OFFICE | TRIAL PART NO.

VENDOR

VENDOR NO.

DWG TYPE	DWG SOURCE	DWG DATE	UNIT	SCL	ANGLE
R	NEW	00.11.10	mm	5/1	3

APPROVED	CHECKED	CHECKED	DESIGN	DRAWN
N. ASAKURA		T. SAKAGUTI	SAKAGUCHI	Y. IMAI
			99.10.15	02.06.07

MATL. SPEC. C2600 (t=0.40) TIN PLATING

TREAT. & FIN.

NAME JOINT TERMINAL

PART NO. CH. CODE 7017-1180-02 ETC.

DWG NO. 7017-1180-02:R

SET DWG NO.

YAZAKI CORPORATION