	10MAX	50MAX	100MAX	250MAX	2500VR	ANGLE	ECCENT
指定公差	±0.5	±0.8	±1.5	±2.5	±3	±5°	0.3

注 記

1)適用電線サイズ:AV(EB)30sq

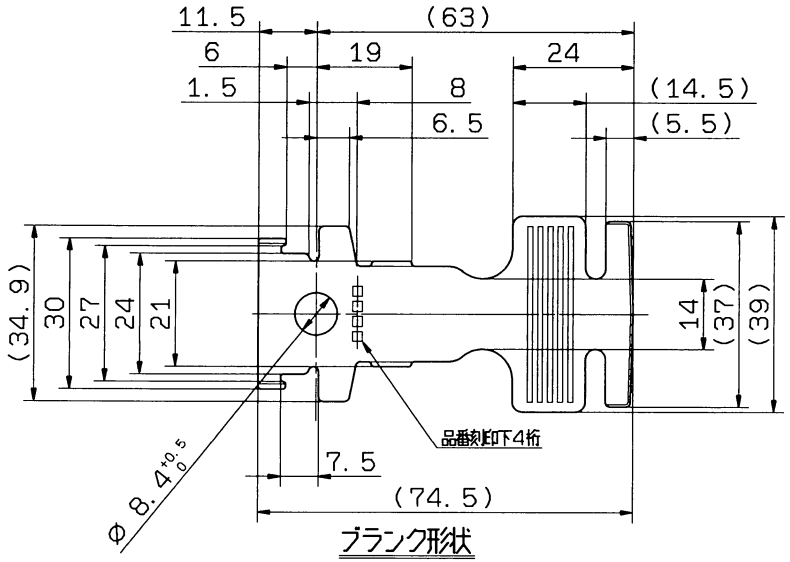

ブランク形状

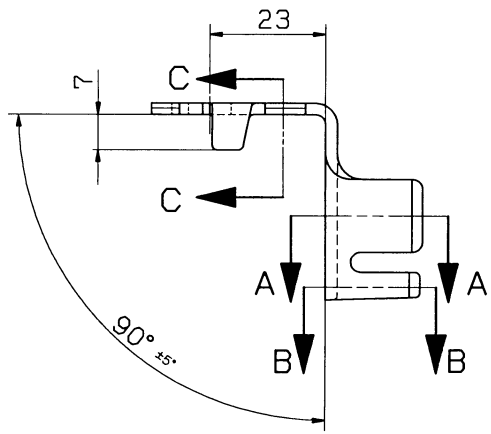

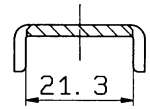

SEC. C-C

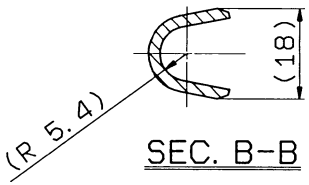

SEC. B-B

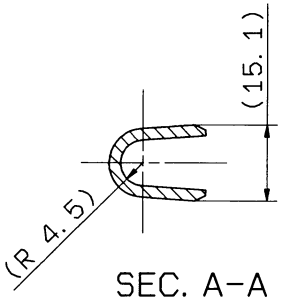

SEC. A-A

ISSUE MARK

LET	DATE	REVISION RECORD	NO.	CHKD
	93.07.13	NEW	C93-0610	M.K

GENERAL TOLERANCE

	10MAX	50MAX	100MAX	250MAX	2500VR	ANGLE	ECCENT
A	±0.15	±0.2	±0.3	±0.5	±0.75	±30'	0.1
B	±0.2	±0.3	±0.55	±0.95	±1.4	±30'	0.1
C	±0.3	±0.5	±0.8	±1.4	±2	±30'	0.15

SPECIFIED 指定公差

WEIGHT g

CUSTOMER

CUSTOMER PART NO. | CUSTOMER DWG NO.

OFFICE | TRIAL PART NO.

VENDOR

VENDOR NO.

DWG TYPE	DWG SOURCE	DWG DATE	UNIT	SCL	ANGLE
R	NEW	90.12.12	mm	1/1	3

APPROVED	CHECKED	CHECKED	DESIGN	DRAWN
堀越	鈴	前田	KATSUYA -SUZUKI	勝久(鈴)
93.7.13	93.7.13	93.7.13	90.12.12	93.7.13

MATL. SPEC. C2801P (T=2.3) (JIS H 3100)

TREAT. & FIN. 注記参照

NAME ターミナル

840H

PART NO. 7003-6815-02

DWG NO. 7003-6815-02:R

YAZAKI CORPORATION

A3