	10MAX	50MAX	100MAX	250MAX	2500VR	ANGLE	ECCENT
指定公差	±0.5	±0.8	±1.5	±2.5	±3	±5°	0.3

注記

1. 適用電線サイズ：AV(EB)30

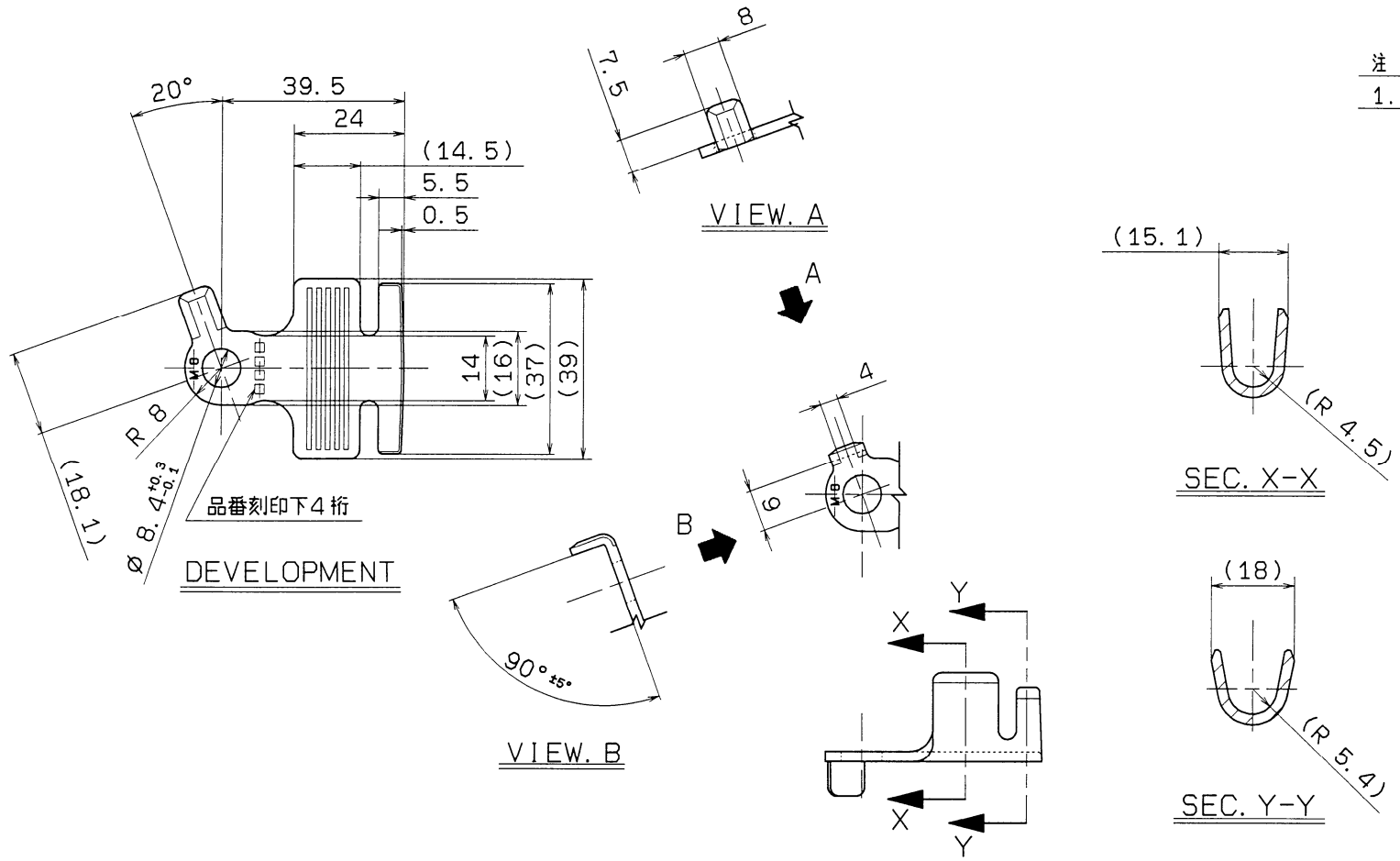

ISSUE MARK

LET	DATE	REVISION RECORD	NO.	CHKD
	94.02.28	NEW	C94-0147	荻野

GENERAL TOLERANCE

	10MAX	50MAX	100MAX	250MAX	2500VR	ANGLE	ECCENT
A	±0.15	±0.2	±0.3	±0.5	±0.75	±30'	0.1
B	±0.2	±0.3	±0.55	±0.95	±1.4	±30'	0.1
C	±0.3	±0.5	±0.8	±1.4	±2	±30'	0.15

SPECIFIED 指定公差

MASS g

CUSTOMER

CUSTOMER PART NO. | CUSTOMER DWG NO.

OFFICE | TRIAL PART NO.

VENDOR | 7F9303-2095

VENDOR NO.

DWG TYPE	DWG SOURCE	DWG DATE	UNIT	SCL	ANGLE
R	NEW	94.02.28	mm	1/1	3

APPROVED	CHECKED	CHECKED	DESIGN	DRAWN
(陸	義)	敏	Y. OGINO	義
94.2.28	94.2.28	94.2.28	94.02.28	2.28

MATL. C2801P, (t=2.3) SPEC. (JIS H 3100) | TREAT. & FIN.

NAME TERMINAL

PART NO. & CHANGE CODE STD NO. 7003-6018-02

DWG NO. 7003-6018-02:R

YAZAKI CORPORATION

A3