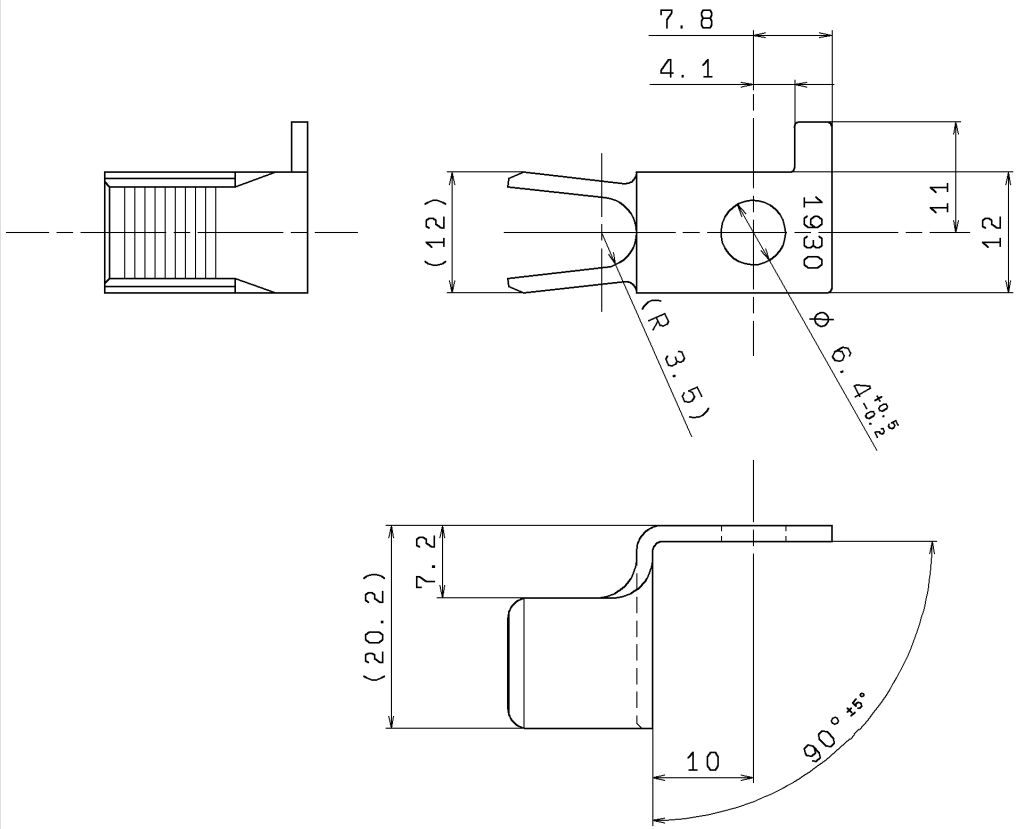

NOTES

1. MUST BE FREE OF BURR AND IMPERFECTION THAT AFFECT FUNCTION.
2. APPLICABLE WIRE SIZE:AV(EB)20~30
3. ATTACHED BOLT SIZE : M6

注 記

1. 機能上有害なバリ及びシャープエッジ，変形等無き事
2. 適用電線サイズ ： AV(EB)20~30
3. 適応ボルトサイズ：M6

ISSUE MARK

LET	DATE	REVISION RECORD	NO.	CHKD
	02.07.02	N E W	C02-0140	G. F

GENERAL TOLERANCE

	10MAX	50MAX	100MAX	250MAX	2500VR	ANGLE	ECCENT
A	±0.15	±0.2	±0.3	±0.5	±0.75	±30'	0.1
B	±0.2	±0.3	±0.55	±0.95	±1.4	±30'	0.1
Ⓒ	±0.3	±0.5	±0.8	±1.4	±2	±30'	0.15

SPECIFIED

MASS APPROX. 16 g

CUSTOMER
CUSTOMER PART NO.
CUSTOMER DWG NO.
OFFICE
TRIAL PART NO.
VENDOR
VENDOR NO.

DWG TYPE	DWG SOURCE	DWG DATE	UNIT	SCL	ANGLE
R	N E W	02.07.02	mm	2:1	3

APPROVED	CHECKED	CHECKED	DESIGN	DRAWN
市川	芹澤	赤松	藤井	藤井
			02.07.02	02.07.02

MATL. SPEC. CUPPER ALLOY (t=1.6)
TREAT. & FIN. TIN-PLATING
NAME TERMINAL
PART NO. CH. CODE 7003-1930-02
DWG NO. 7003-1930-02:R
SET DRW NO.
YAZAKI CORPORATION