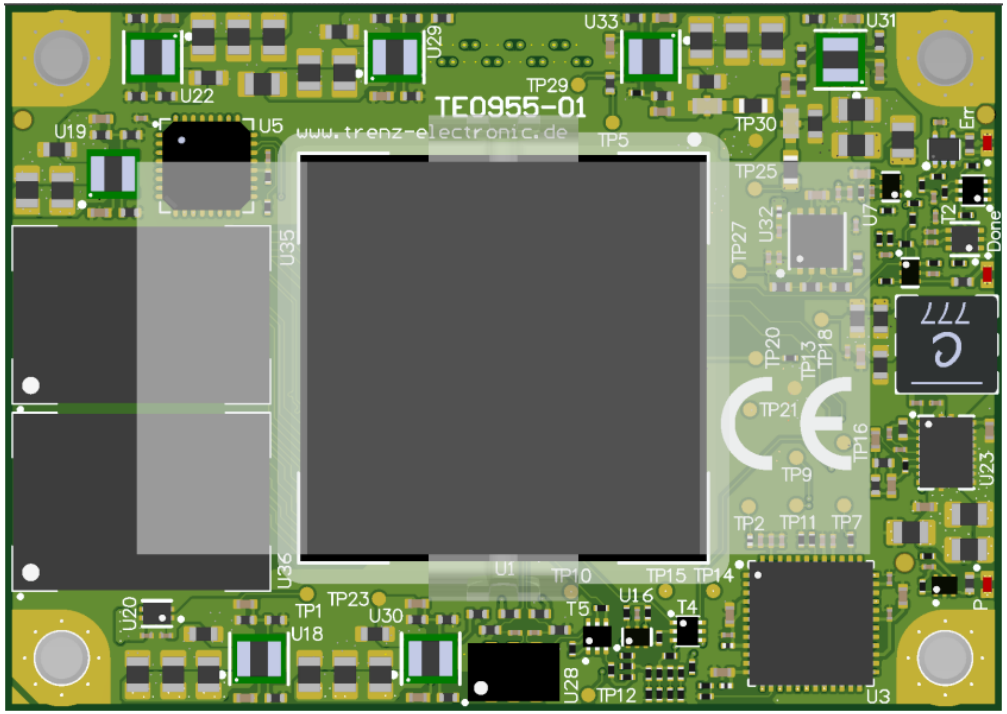

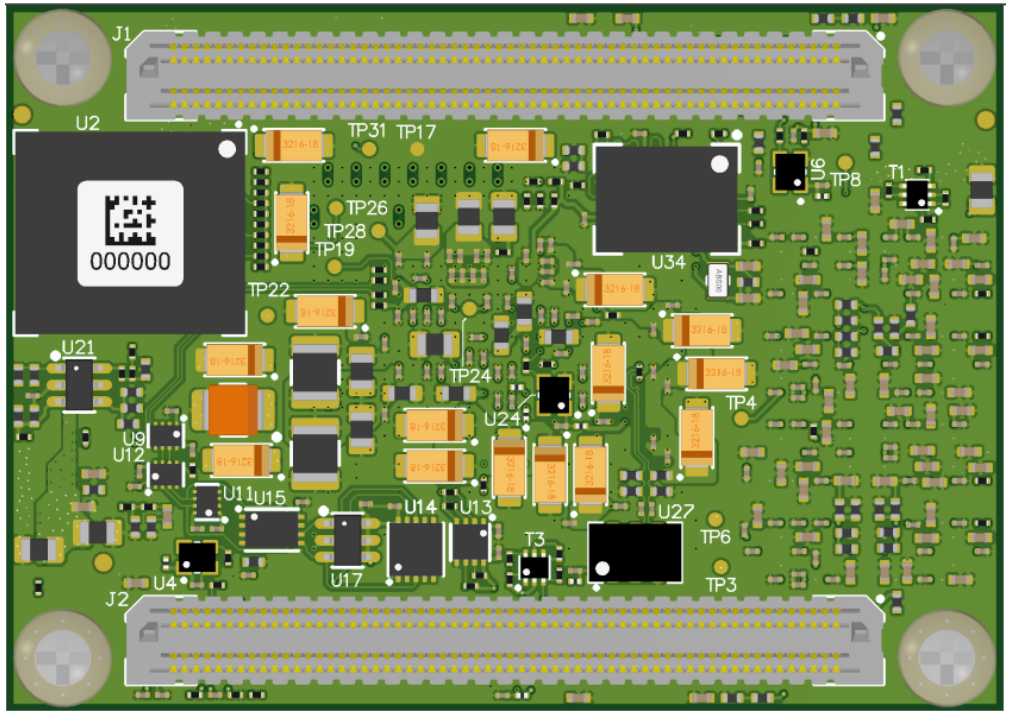

Regarding the usage of our schematics and alike documentation for Trenz module TE0955.

Project is protected under copyright and we strongly and strictly prohibit the reverse engineering or recreation, even if the design is just adapted or modified. TE0955 is protected under such right and in case of plagiarism we will have to do anything necessary in order to protect our assets.

Schematics and other handouts serve for informational purposes only!

trenz electronic	Title: Legal Notices		
A4	Number: TE0955 EGBE32-A		Rev. 01
Date: 20.02.2025	Copyright: Trenz Electronic GmbH		Page 1 of 28
Filename: Legal Notices Modules.SchDoc			

REV	Description	
-01	Initial revision	VY

Title: Revision Changes			
A4	Number: TE0955 EGBE32-A		Rev. 01
Date: 20.02.2025	Copyright: Trenz Electronic GmbH		Page 2 of 28
Filename: Revision_Changes.SchDoc			

Block Diagram:

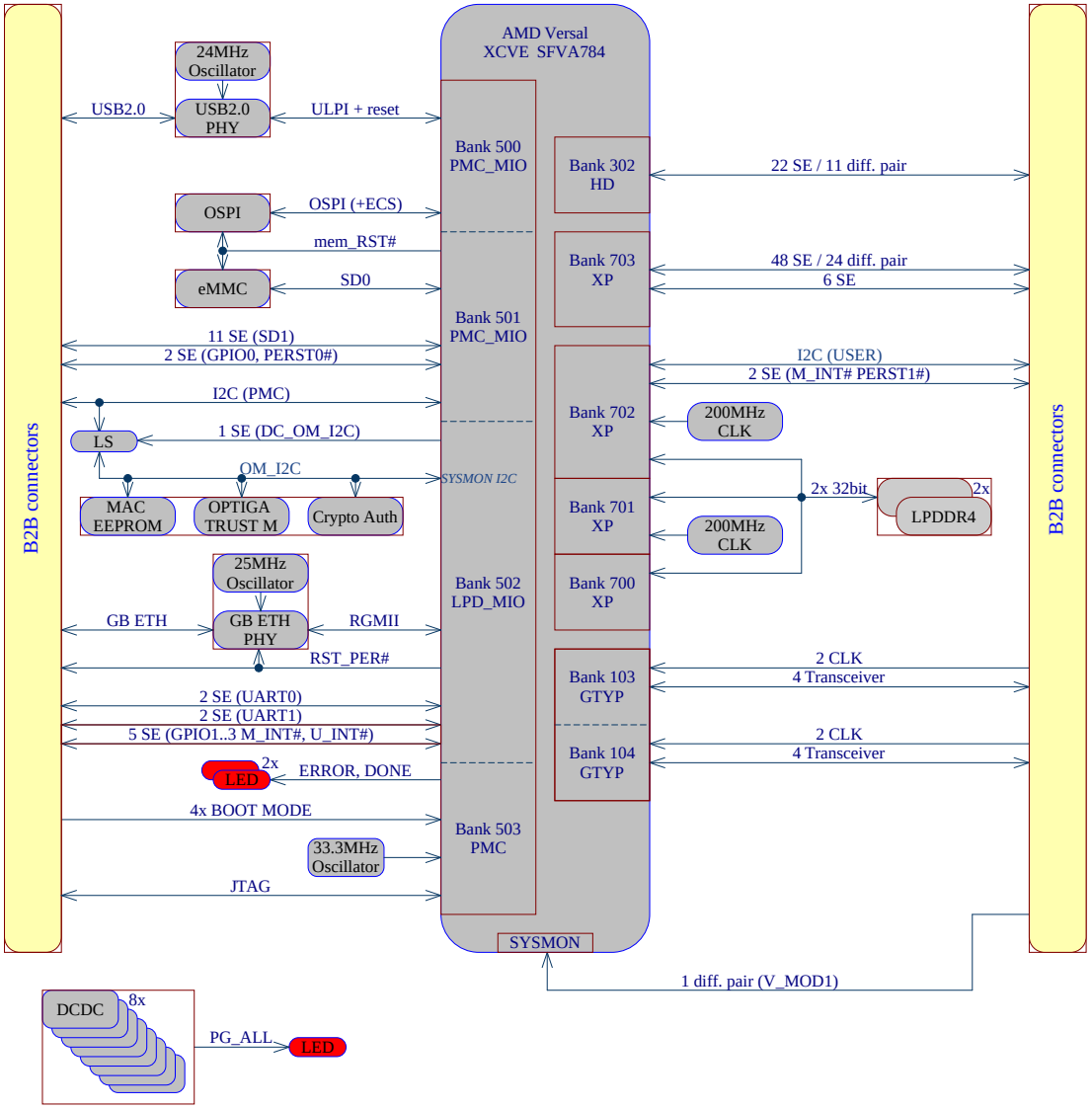

Supported Voltage Ranges:

Power Rail	Direction	Range	Tolerance	Description	Note
V_MOD1	IN	5V .. 12V	+/-5%	Module main power supply	-
3V3_AO	OUT	3.3V	+/-3%	Always On rail; Periphery supply	Max additional (low ESR) capacitance: 20µF
1V8	OUT	1.8V	+/-3%	Periphery supply	PMC 500 and LPD 502; Max additional (low ESR) capacitance: 40µF
V_IO_W01	IN	1.0V .. 1.5V	+/-5%	IO supply	XPIO Bank 703
V_IO_X3	IN	1.8V .. 3.3V	+/-3%	IO supply	HD Bank 302
V_IO_CFG	IN	1.8V	+/-5%	IO CFG supply	PMC 501 and 503; 3V3 possible, but not recommended. UART signals have 1.8V voltage levels, independent from V_IO_CFG.
V_BAT	IN	1.35V	+/-10%	Supply for Versal BB RAM and RTC	If not used connect to GND

I2C Addresses:

Device	Bus	Address	Note
Versal PL (or PS via EMIO)	U_I2C (PL)	- -	USER I2C Bus, B2B pin J2B-D33, J2B-D34 to Baseboard
Versal PMC	M_I2C (PMC)	- -	Master
-	M_I2C (PMC)	- -	Module I2C Bus ,B2B pin J2B-C50, J2B-C51 to Baseboard

Following devices are connected OM_I2C which is connected to M_I2C via Levelshifter (U12) and can be dissconnected by PS GPIO

24AA025E48T-I/OT (U14)	OM_I2C	1010011 53H	EEPROM for MAC with user area
SLS32AIA010MHUSON10XTMA2 (U11)	OM_I2C	0110000 30H	Crypto Authentication
ATECC608B-MAHCZ-S (U12)	OM_I2C	110000 60H	ORTIGA TRUST M Cryptographic Co-Processor
Versal SYSMON	OM_I2C	software defined	I2C address see reference design; via Levelshifter (U11)

trenz electronic	Title: Overview		
A4	Number: TE0955 EGBE32-A		Rev. 01
Date: 25.02.2025	Copyright: Trenz Electronic GmbH		Page 3 of 28
	Filename: Overview.SchDoc		

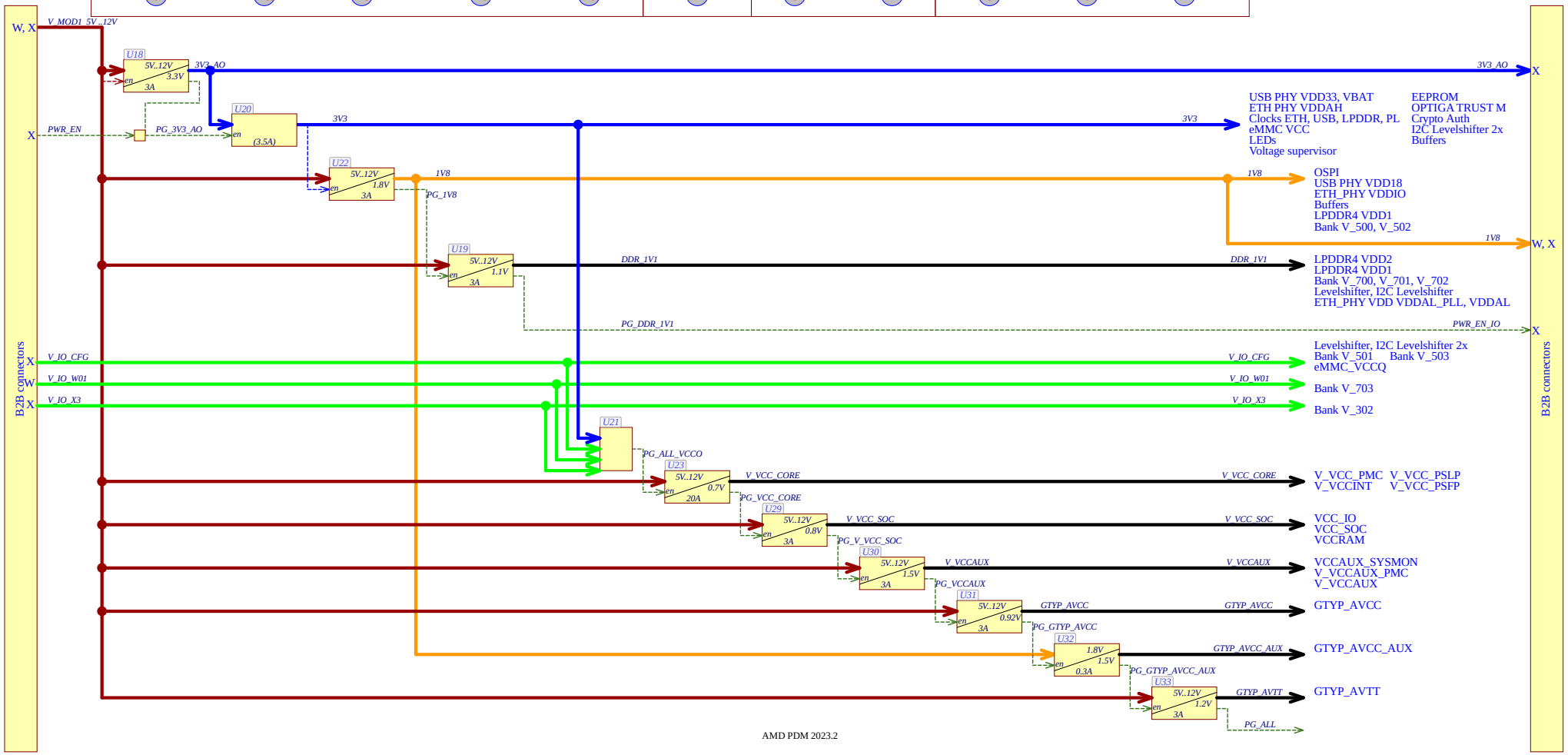

AMD PDM 2023.2

- ETH PHY (U2): 3V3 and 1V8 before 1V1_DDR
- Levelshifter (U25): 1V1_DDR before V_IO_CFG

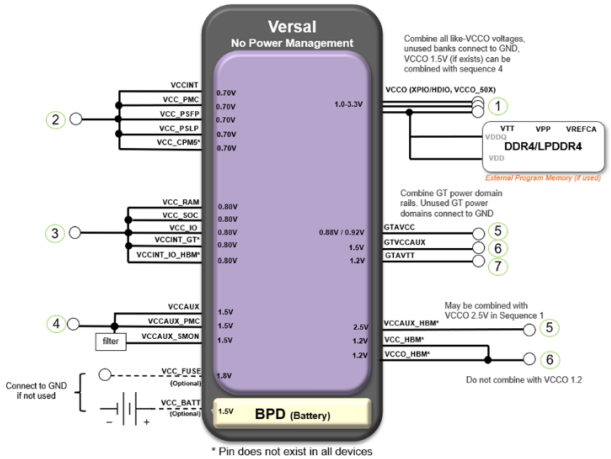

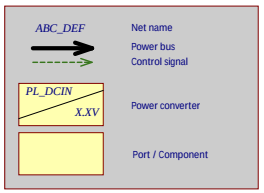

trenz electronic	Title: Power Diagram		
A3	Nummer: TE0955 EGBE32-A		Rev. 01
Datum: 2025-01-21	Copyright: Trenz Electronic GmbH		Page 4 of 28
Filename: Power_Diagram.SchDoc			

Special notes:

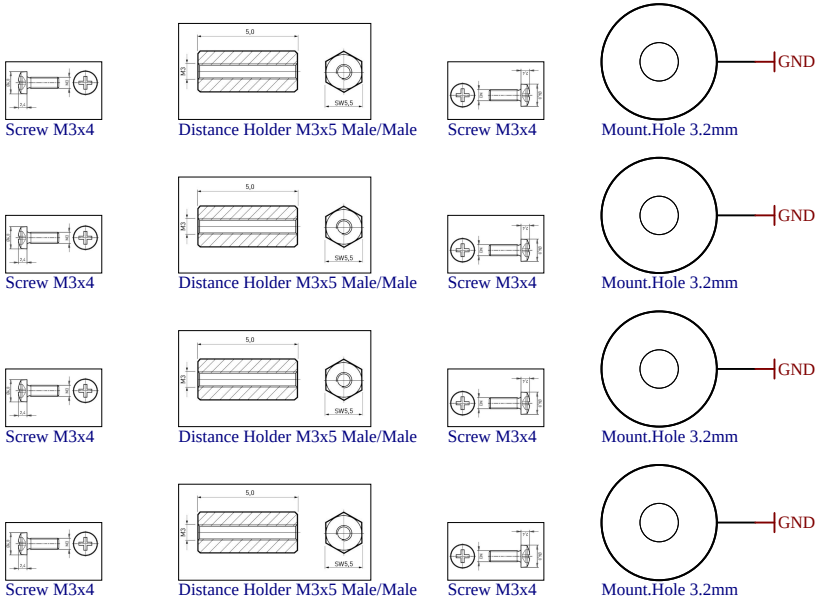

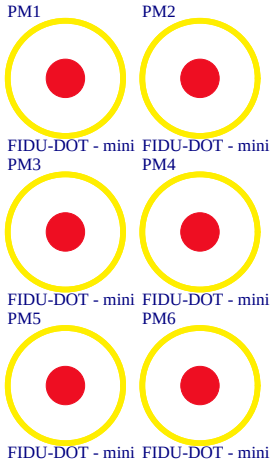

Serial1
Serial
Serialnumber 6,3 x 6.3mm
LOGO1

CE Logo on Top Overlay

CE-TOPOVERLAY

Assembly variant	EGBE32-A
Created by	MR
Modified by	MR
Modified at	2025-02-06

trenz electronic

Title: TE0955		
A4	Number: TE0955 EGBE32-A	Rev. 01
Date: 20.02.2025	Copyright: Trenz Electronic GmbH	Page 5 of 28
Filename: TE0955.SchDoc		

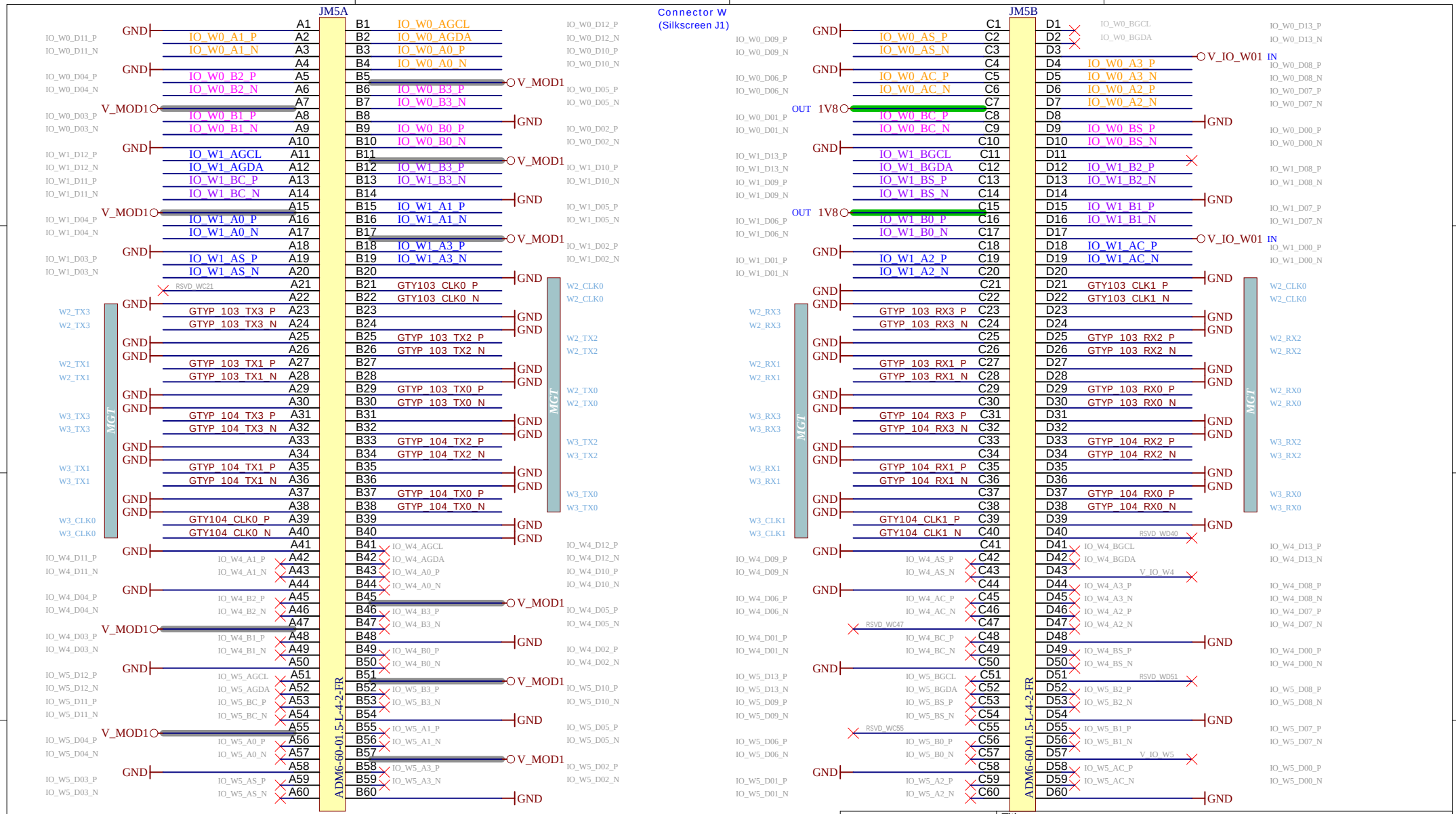

Title: B2B Connector 1

A4	Number: TE0955 EGBE32-A	Rev. 01
Date: 20.02.2025	Copyright: Trenz Electronic GmbH	Page 6 of 28
Filename: B2B_Connector_1.SchDoc		

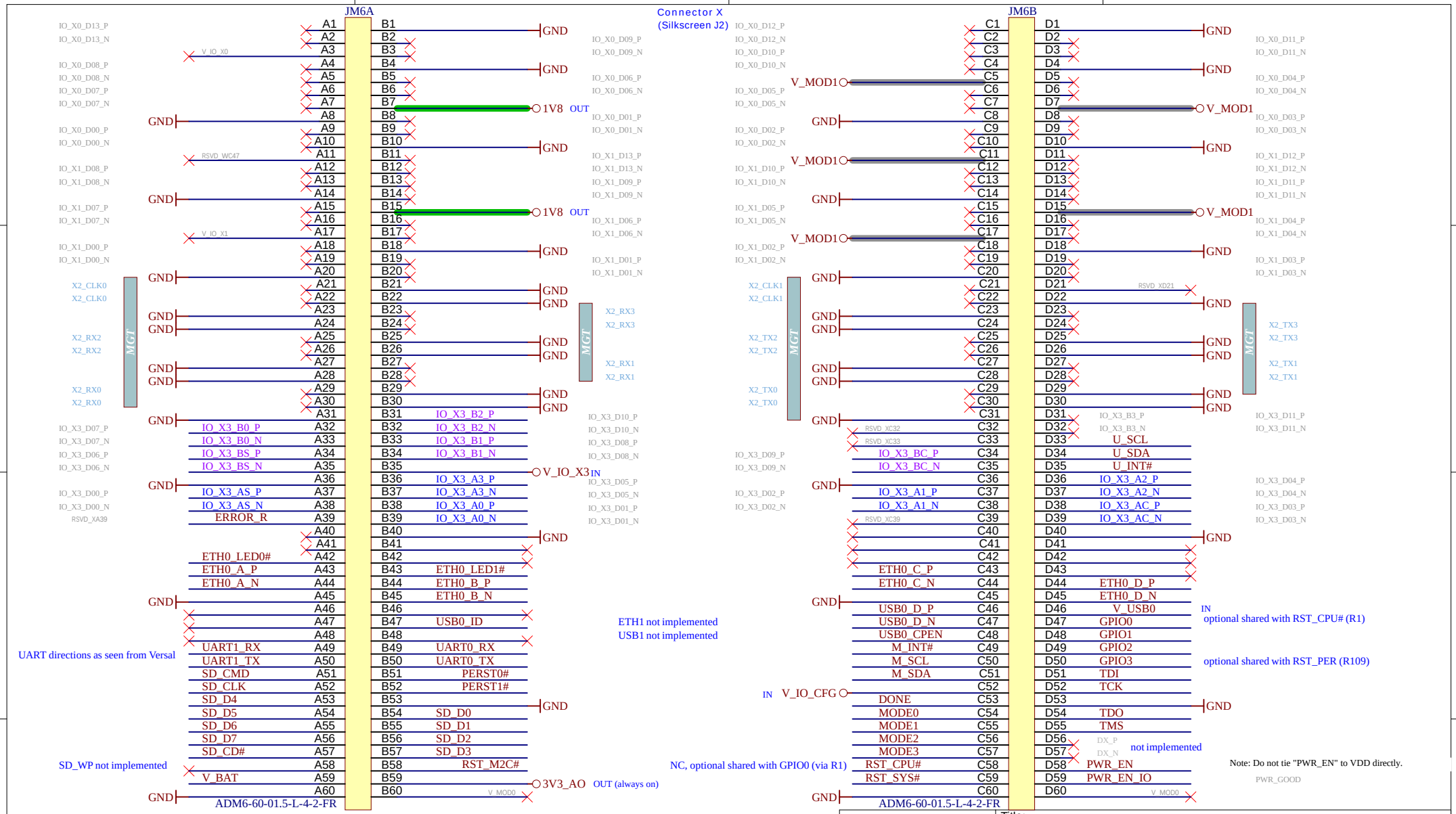

Title: B2B Connector 2			
A4	Number: TE0955 EGBE32-A		Rev. 01
Date: 21.02.2025	Copyright: Trenz Electronic GmbH		Page 7 of 28
Filename: B2B_Connector_2.SchDoc			

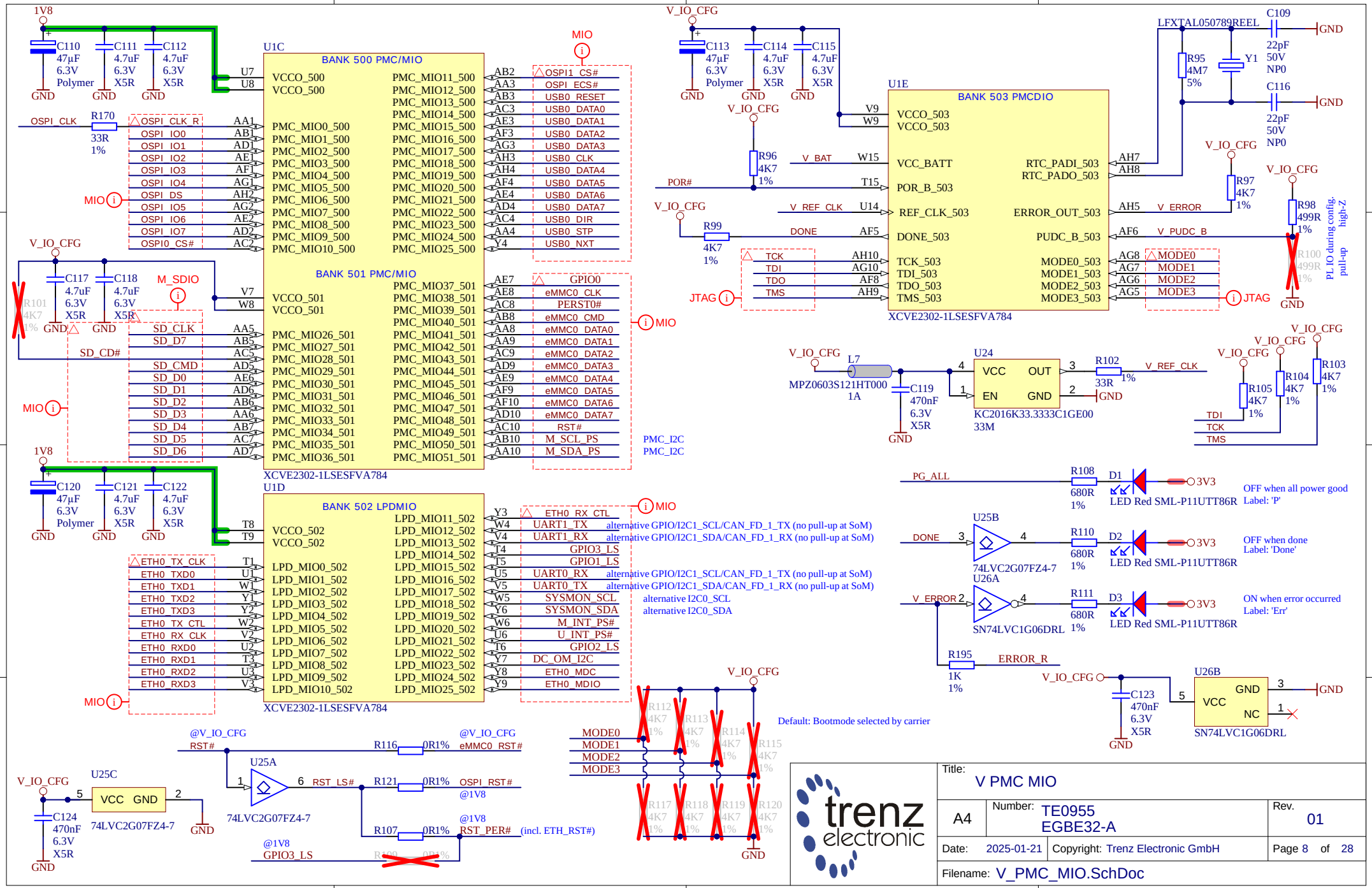
U1C
BANK 500 PMC/MIO
BANK 501 PMC/MIO
XCVE2302-1LSESFVA784
U1D
BANK 502 LPDMIO
XCVE2302-1LSESFVA784
U1E
BANK 503 PMCDIO
XCVE2302-1LSESFVA784
U24
KC2016K33.3333C1GE00
33M
U25B
74LVC2G07FZ4-7
U26A
SN74LVC1G06DRL
U26B
SN74LVC1G06DRL
U25A
74LVC2G07FZ4-7
U25C
74LVC2G07FZ4-7
LFXTAL050789REEL
Y1
MPZ0603S121HT000
1A
LED Red SML-P11UTT86R
OFF when all power good
Label: 'P'
OFF when done
Label: 'Done'
ON when error occurred
Label: 'Err'
Default: Bootmode selected by carrier
alternative GPIO/I2C1_SCL/CAN_FD_1_TX (no pull-up at SoM)
alternative GPIO/I2C1_SDA/CAN_FD_1_RX (no pull-up at SoM)
alternative I2C0_SCL
alternative I2C0_SDA
(incl. ETH_RST#)
PL IO during config.
high-Z
pull-up
trenz electronic
Title:
V PMC MIO
A4
Number:
TE0955
EGBE32-A
Rev.
01
Date:
2025-01-21
Copyright: Trenz Electronic GmbH
Page 8 of 28
Filename: V_PMC_MIO.SchDoc

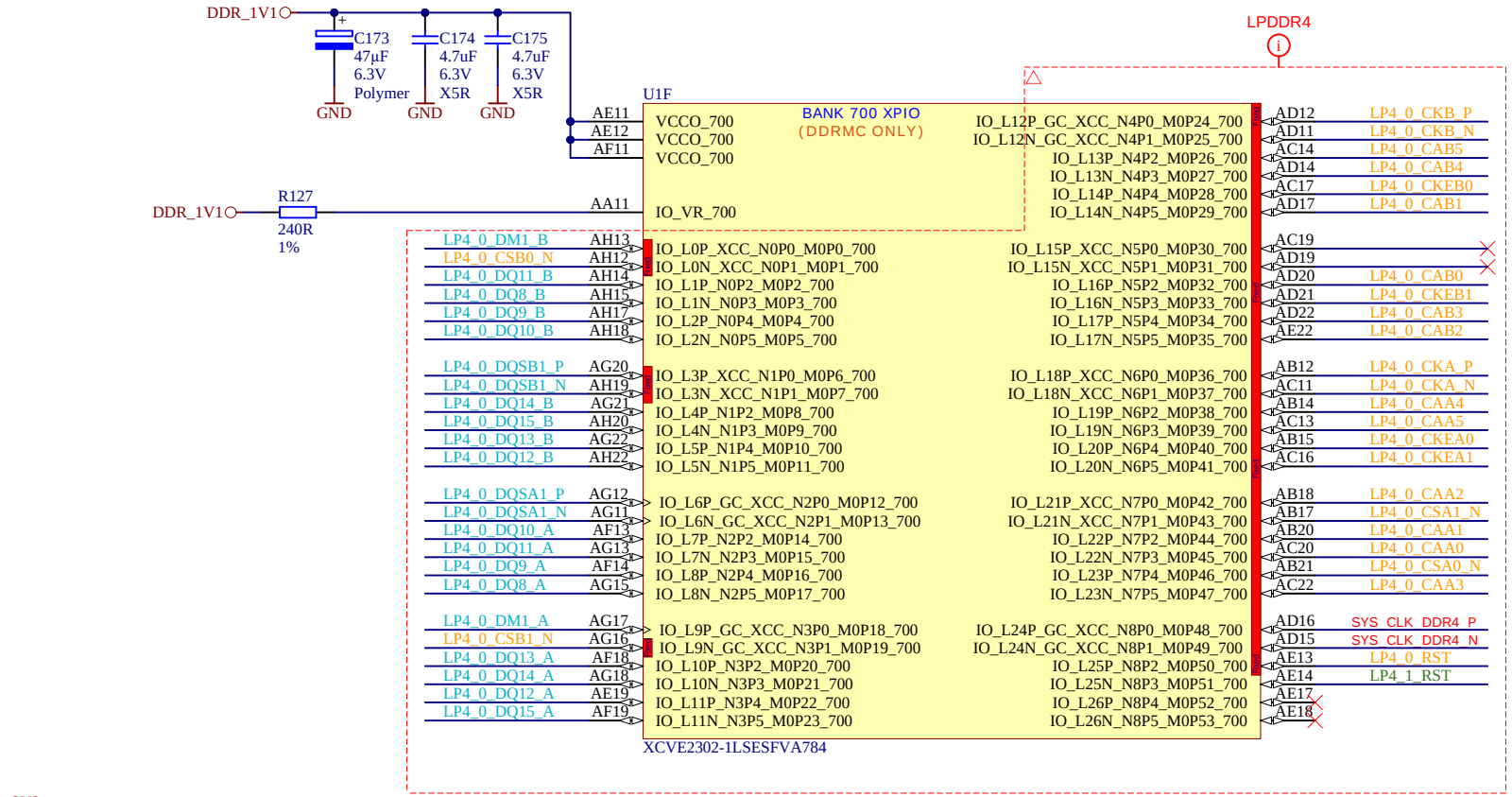

trenz electronic	Title: V XPIO 700		
A4	Number: TE0955 EGBE32-A		Rev. 01
Date: 2025-01-21	Copyright: Trenz Electronic GmbH		Page 9 of 28
Filename: V_XPIO_700.SchDoc			

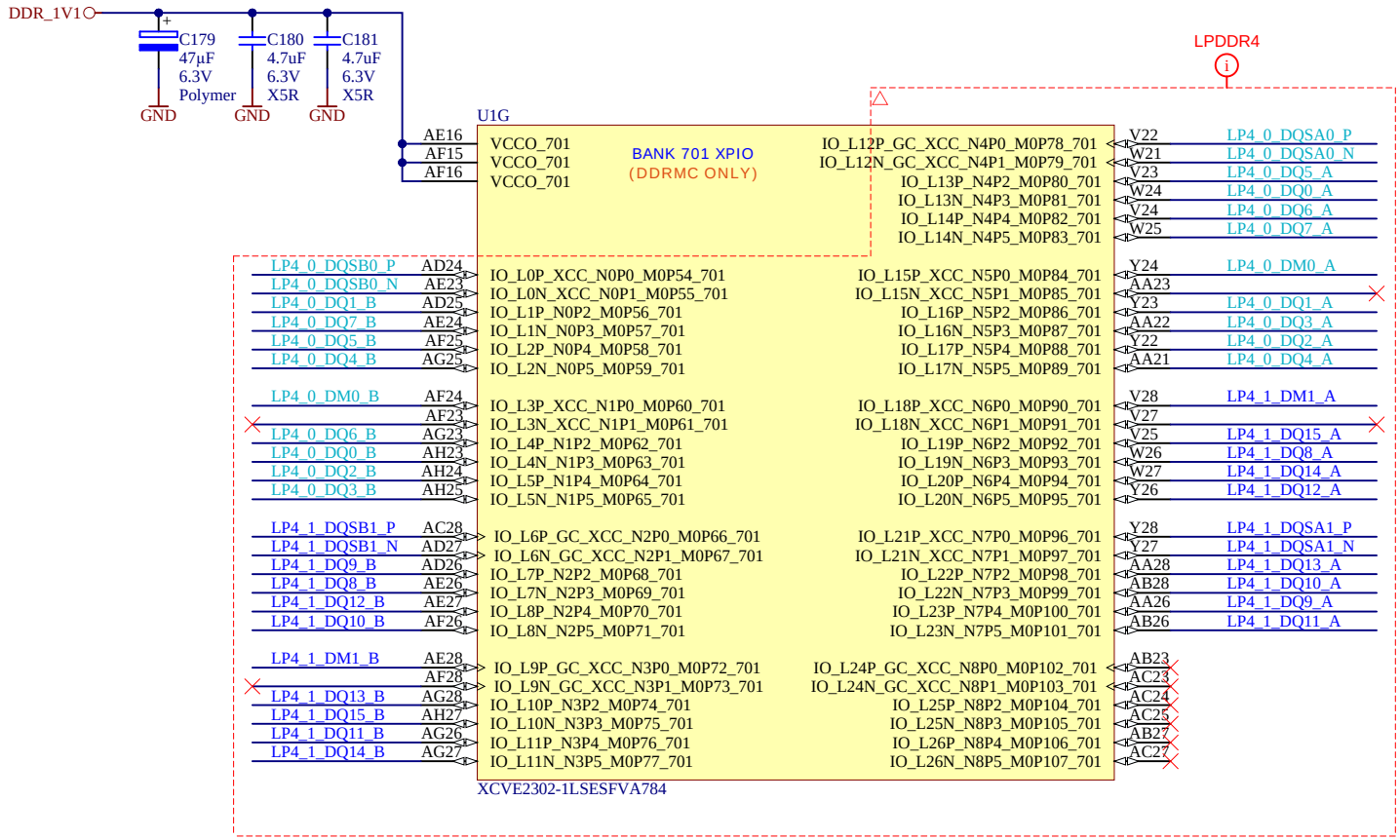

PG313, p.215:
5. If an entire nibble is free then it can be used for non-memory designs.

This are DDRMC ONLY pins. therefore not usabel!

trenz electronic	Title: V XPIO 701		
A4	Number: TE0955 EGBE32-A		Rev. 01
Date: 2025-01-21	Copyright: Trenz Electronic GmbH		Page 10 of 28
Filename: V_XPIO_701.SchDoc			

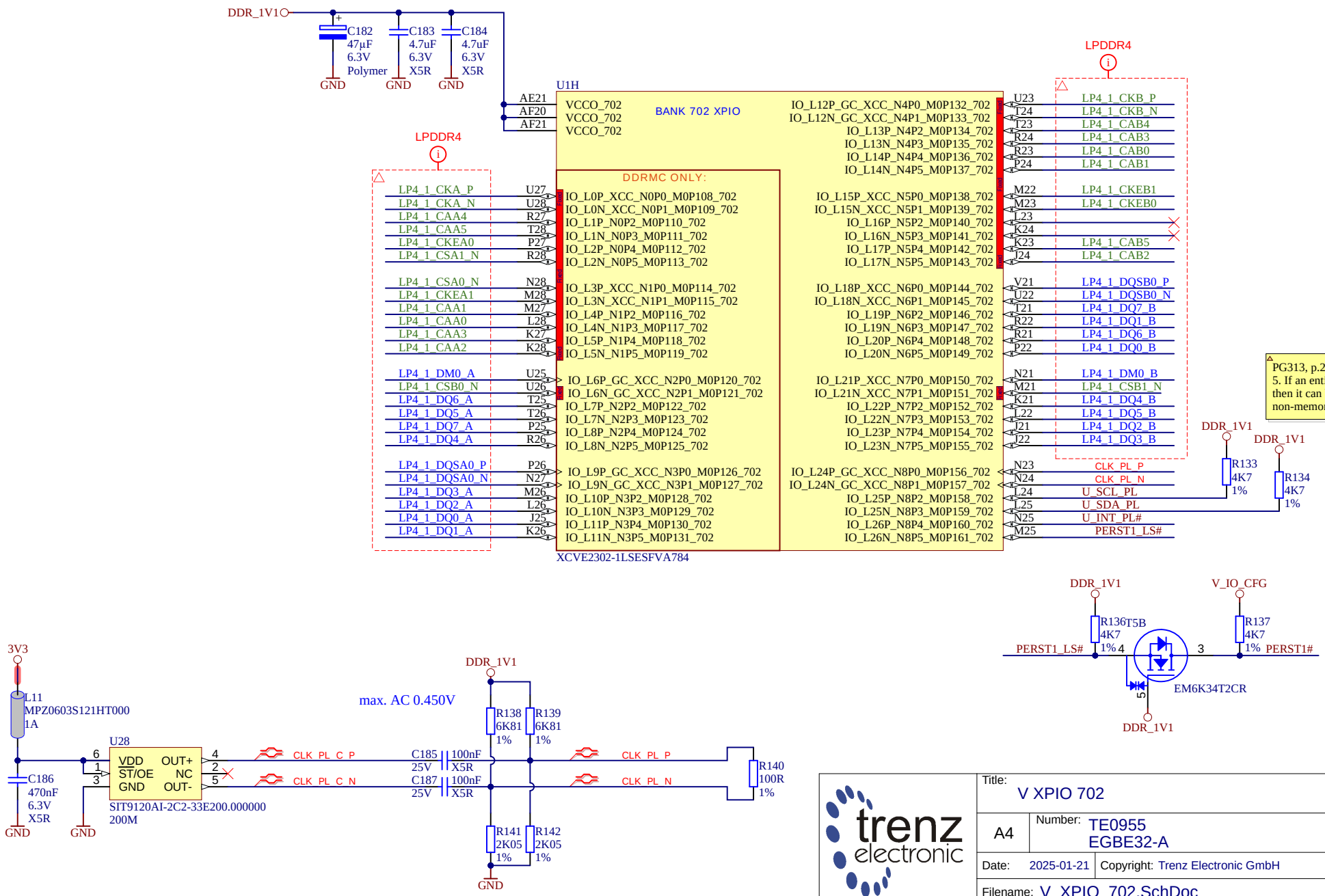

Title: V XPIO 702

A4	Number: TE0955 EGBE32-A	Rev. 01
Date: 2025-01-21	Copyright: Trenz Electronic GmbH	Page 11 of 28
Filename: V_XPIO_702.SchDoc		

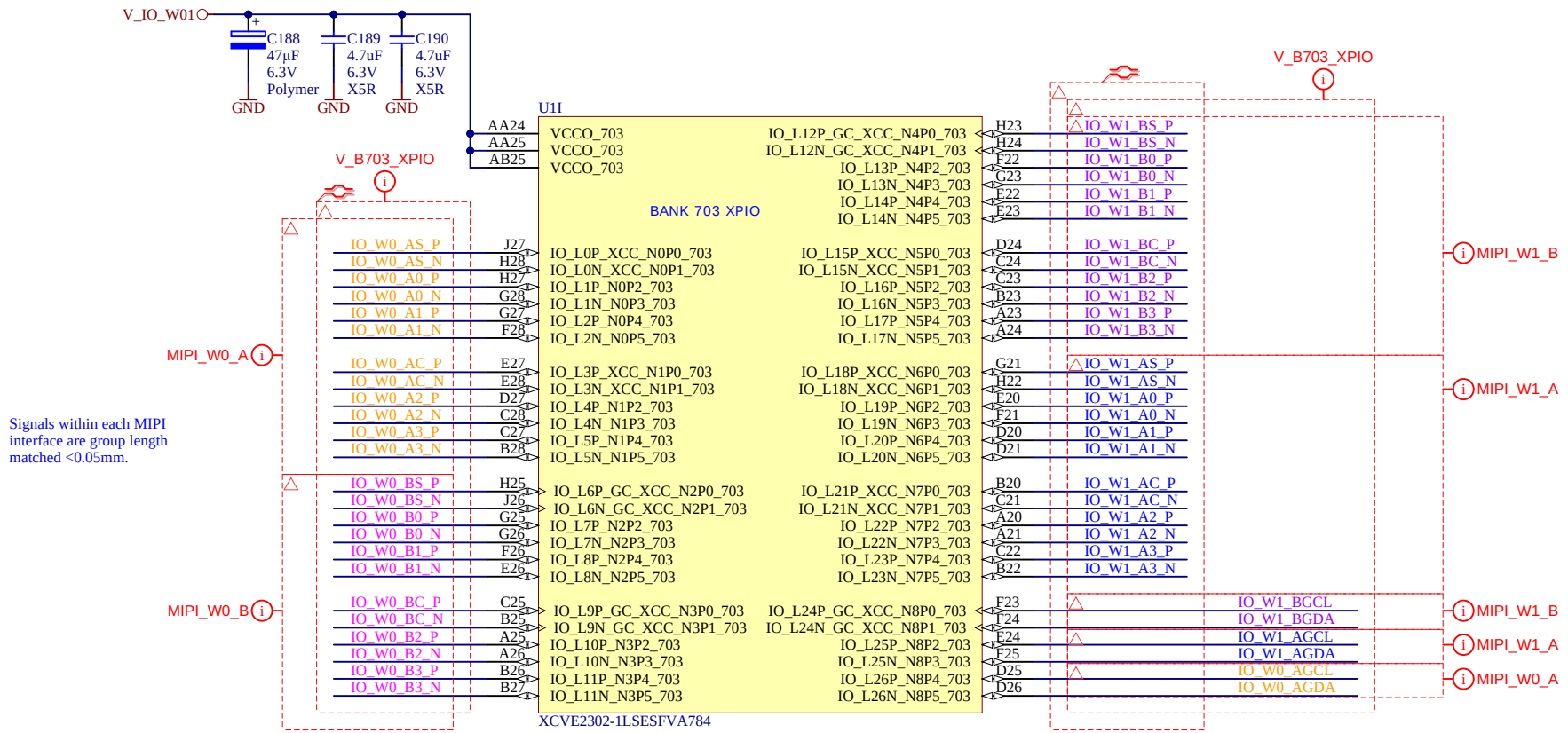

trenz electronic	Title: V XPIO 703		
A4	Number: TE0955 EGBE32-A		Rev. 01
Date: 2025-01-21	Copyright: Trenz Electronic GmbH		Page 12 of 28
Filename: V_XPIO_703.SchDoc			

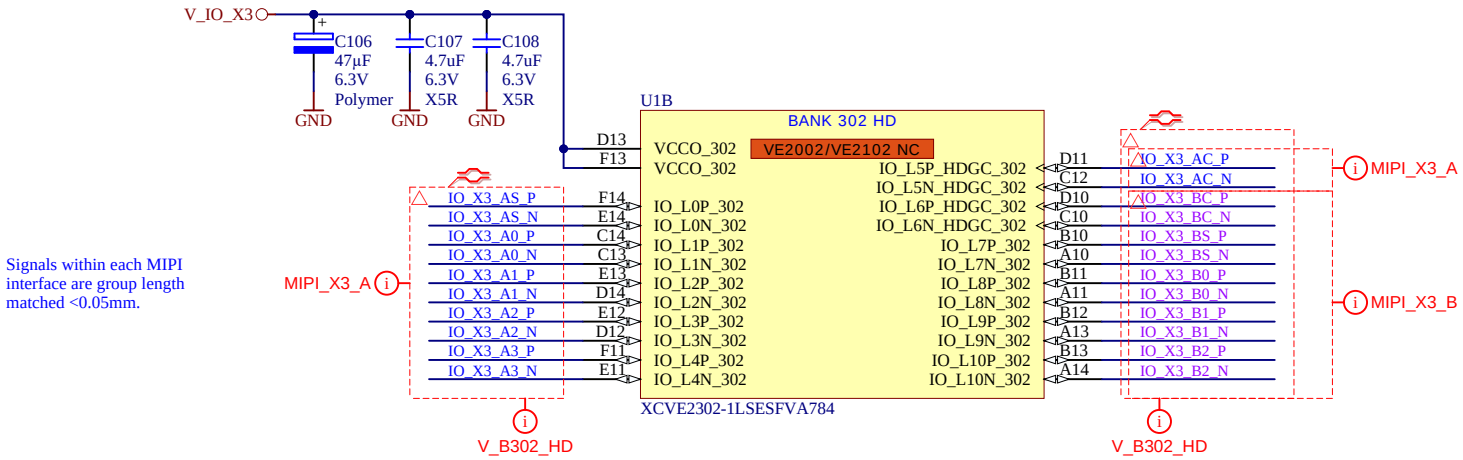

Signals within each MIPI interface are group length matched <0.05mm.

trenz electronic	Title: V HD		
A4	Number: TE0955 EGBE32-A		Rev. 01
Date: 20.02.2025	Copyright: Trenz Electronic GmbH		Page 13 of 28
Filename: V_HD.SchDoc			

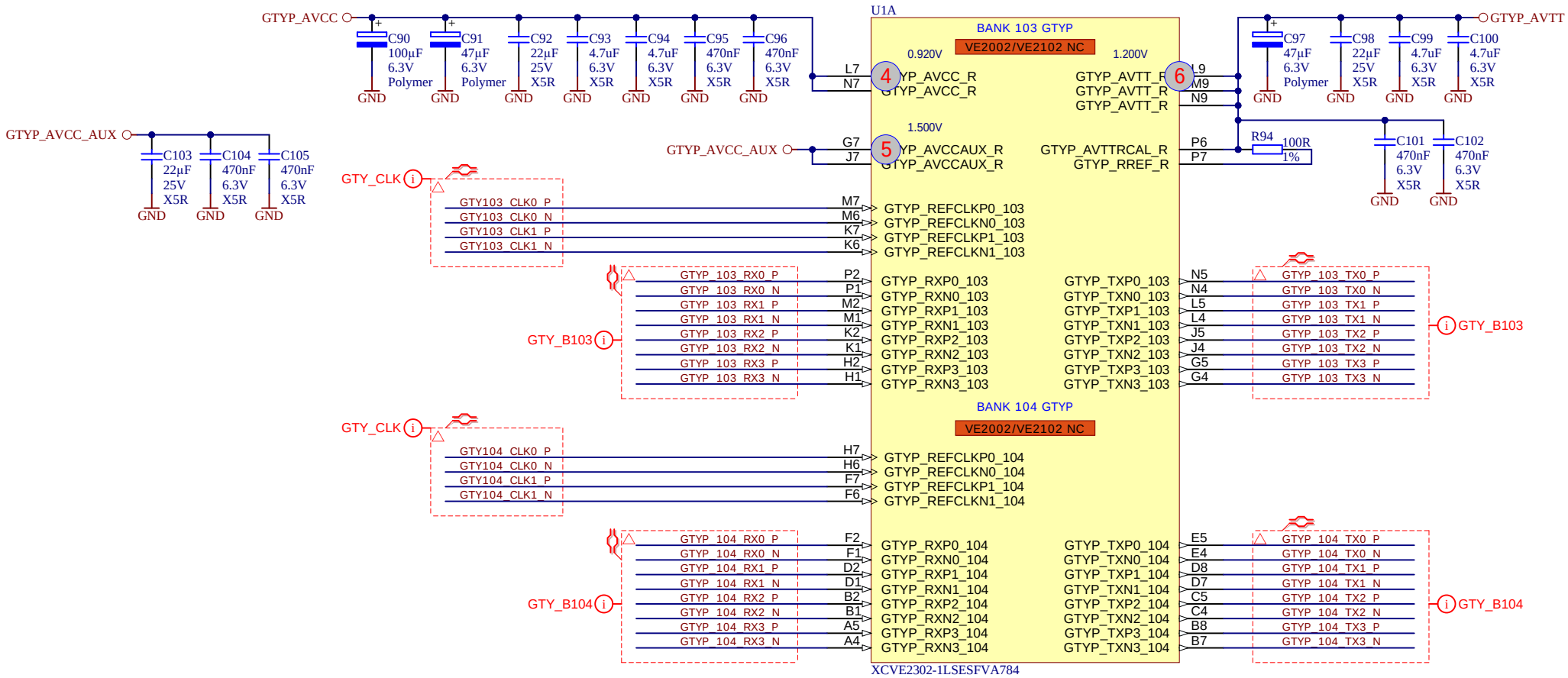

trenz electronic	Title: V GTYP		
A4	Number: TE0955 EGBE32-A		Rev. 01
Date: 2025-01-21	Copyright: Trenz Electronic GmbH		Page 14 of 28
Filename: V_GTYP.SchDoc			

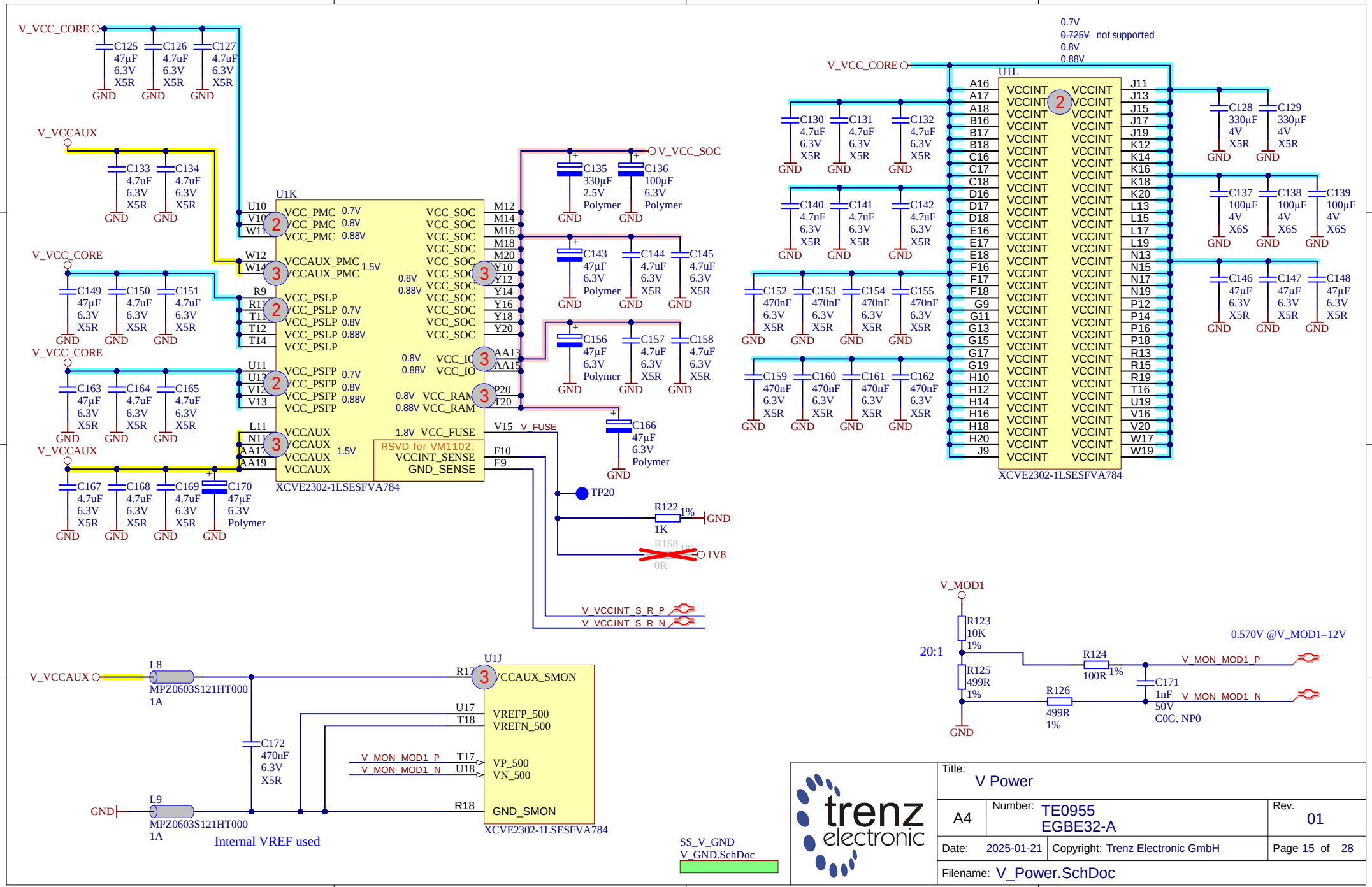
V_VCC_CORE
C125 47µF 6.3V X5R
C126 4.7uF 6.3V X5R
C127 4.7uF 6.3V X5R
GND
V_VCCAUX
C133 4.7uF 6.3V X5R
C134 4.7uF 6.3V X5R
U1K
VCC_PMC 0.7V
VCC_PMC 0.8V
VCC_PMC 0.88V
VCCAUX_PMC 1.5V
VCC_PSLP
VCC_PSLP 0.7V
VCC_PSLP 0.8V
VCC_PSLP 0.88V
VCC_PSFP 0.7V
VCC_PSFP 0.8V
VCC_PSFP 0.88V
VCCAUX 1.5V
VCC_SOC
VCC_IO
VCC_RAM
1.8V VCC_FUSE
RSVD for VM1102:
VCCINT_SENSE
GND_SENSE
XCVE2302-1LSESFVA784
V_VCC_SOC
C135 330µF 2.5V Polymer
C136 100µF 6.3V Polymer
C143 47µF 6.3V Polymer
C144 4.7uF 6.3V X5R
C145 4.7uF 6.3V X5R
C156 47µF 6.3V Polymer
C157 4.7uF 6.3V X5R
C158 4.7uF 6.3V X5R
C166 47µF 6.3V Polymer
V_FUSE
TP20
R122 1% 1K
R168 1% 0R
1V8
V_VCCINT_S_R_P
V_VCCINT_S_R_N
C149 47µF 6.3V X5R
C150 4.7uF 6.3V X5R
C151 4.7uF 6.3V X5R
C163 47µF 6.3V X5R
C164 4.7uF 6.3V X5R
C165 4.7uF 6.3V X5R
C167 4.7uF 6.3V X5R
C168 4.7uF 6.3V X5R
C169 4.7uF 6.3V X5R
C170 47µF 6.3V Polymer
0.7V
~~0.725V~~ not supported
0.8V
0.88V
U1L
VCCINT
XCVE2302-1LSESFVA784
C130 4.7uF 6.3V X5R
C131 4.7uF 6.3V X5R
C132 4.7uF 6.3V X5R
C128 330µF 4V X5R
C129 330µF 4V X5R
C137 100µF 4V X6S
C138 100µF 4V X6S
C139 100µF 4V X6S
C140 4.7uF 6.3V X5R
C141 4.7uF 6.3V X5R
C142 4.7uF 6.3V X5R
C146 47µF 6.3V X5R
C147 47µF 6.3V X5R
C148 47µF 6.3V X5R
C152 470nF 6.3V X5R
C153 470nF 6.3V X5R
C154 470nF 6.3V X5R
C155 470nF 6.3V X5R
C159 470nF 6.3V X5R
C160 470nF 6.3V X5R
C161 470nF 6.3V X5R
C162 470nF 6.3V X5R
V_MOD1
R123 10K 1%
20:1
R125 499R 1%
R124 100R 1%
R126 499R 1%
C171 1nF 50V C0G, NP0
V_MON_MOD1_P
V_MON_MOD1_N
0.570V @V_MOD1=12V
L8 MPZ0603S121HT000 1A
L9 MPZ0603S121HT000 1A
C172 470nF 6.3V X5R
U1J
VCCAUX_SMON
VREFP_500
VREFN_500
VP_500
VN_500
GND_SMON
XCVE2302-1LSESFVA784
Internal VREF used
SS_V_GND
V_GND.SchDoc
trenz electronic
Title: V Power
A4
Number: TE0955 EGBE32-A
Rev. 01
Date: 2025-01-21
Copyright: Trenz Electronic GmbH
Page 15 of 28
Filename: V_Power.SchDoc

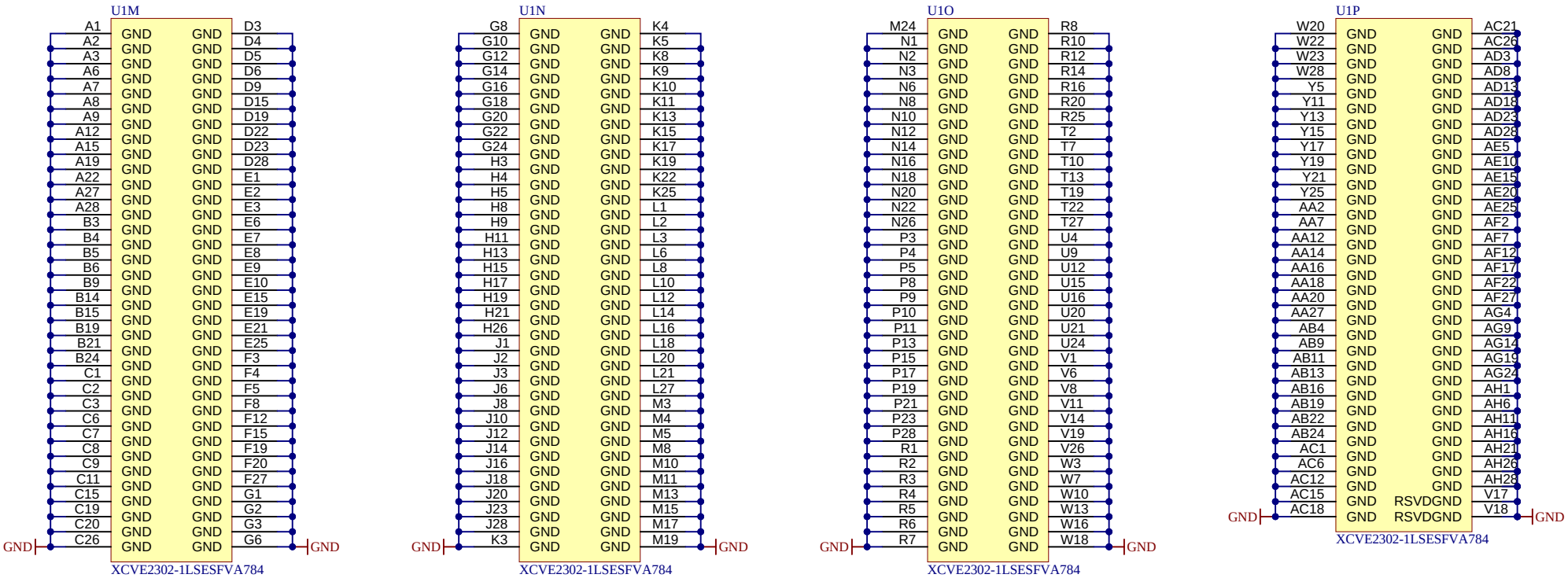

trenz electronic	Title: V GND		
A4	Number: TE0955 EGBE32-A		Rev. 01
Date: 2025-01-21	Copyright: Trenz Electronic GmbH		Page 16 of 28
Filename: V_GND.SchDoc			

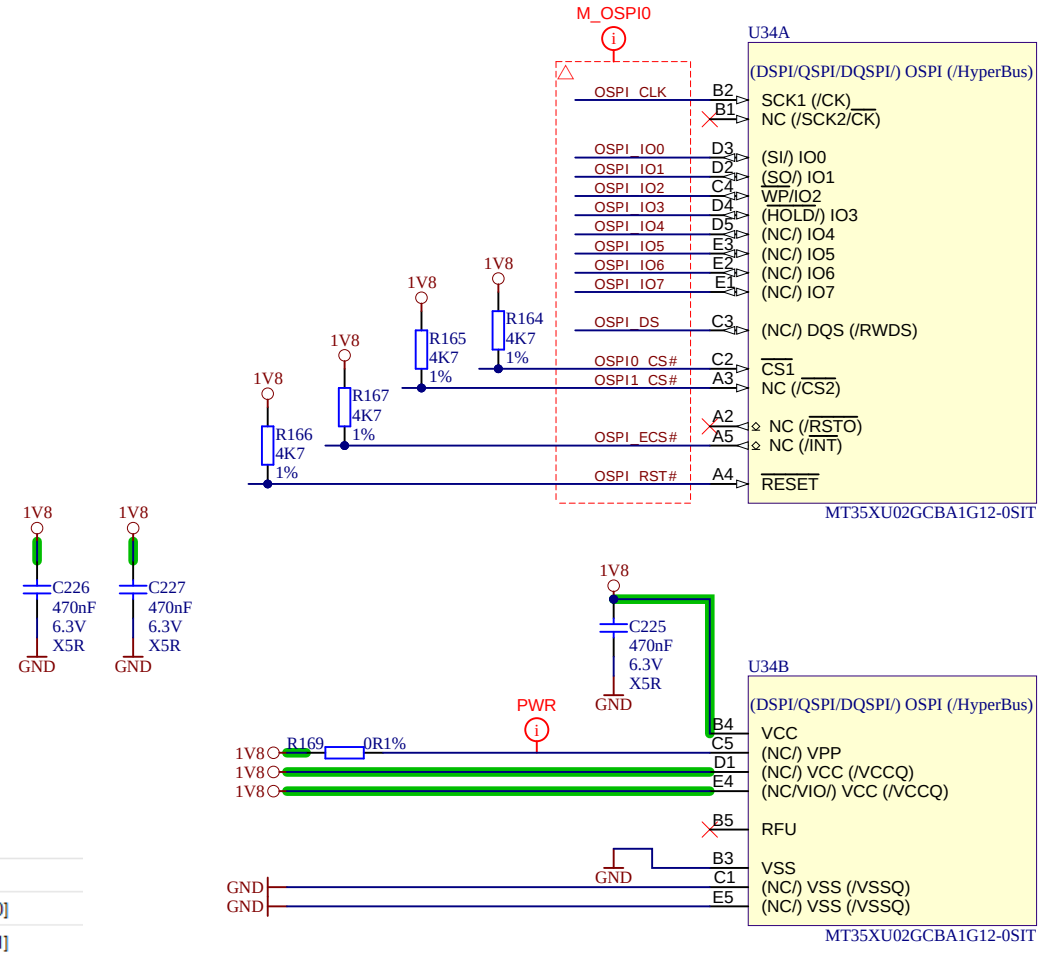

OSPI

	PMC Bank 0
MIO 0	OSPI: ospi_clk
MIO 1	OSPI: ospi_io[0]
MIO 2	OSPI: ospi_io[1]
MIO 3	OSPI: ospi_io[2]
MIO 4	OSPI: ospi_io[3]
MIO 5	OSPI: ospi_io[4]
MIO 6	OSPI: ospi_ds
MIO 7	OSPI: ospi_io[5]
MIO 8	OSPI: ospi_io[6]
MIO 9	OSPI: ospi_io[7]
MIO 10	OSPI: ospi0_cs_b
MIO 11	OSPI: ospi1_cs_b
MIO 12	GPIO 0: gpio_0_pin[12]

for OSPI_ECS#

Title: OSPI			
A4	Number: TE0955 EGBE32-A		Rev. 01
Date: 2025-01-21	Copyright: Trenz Electronic GmbH		Page 17 of 28
Filename: OSPI.SchDoc			

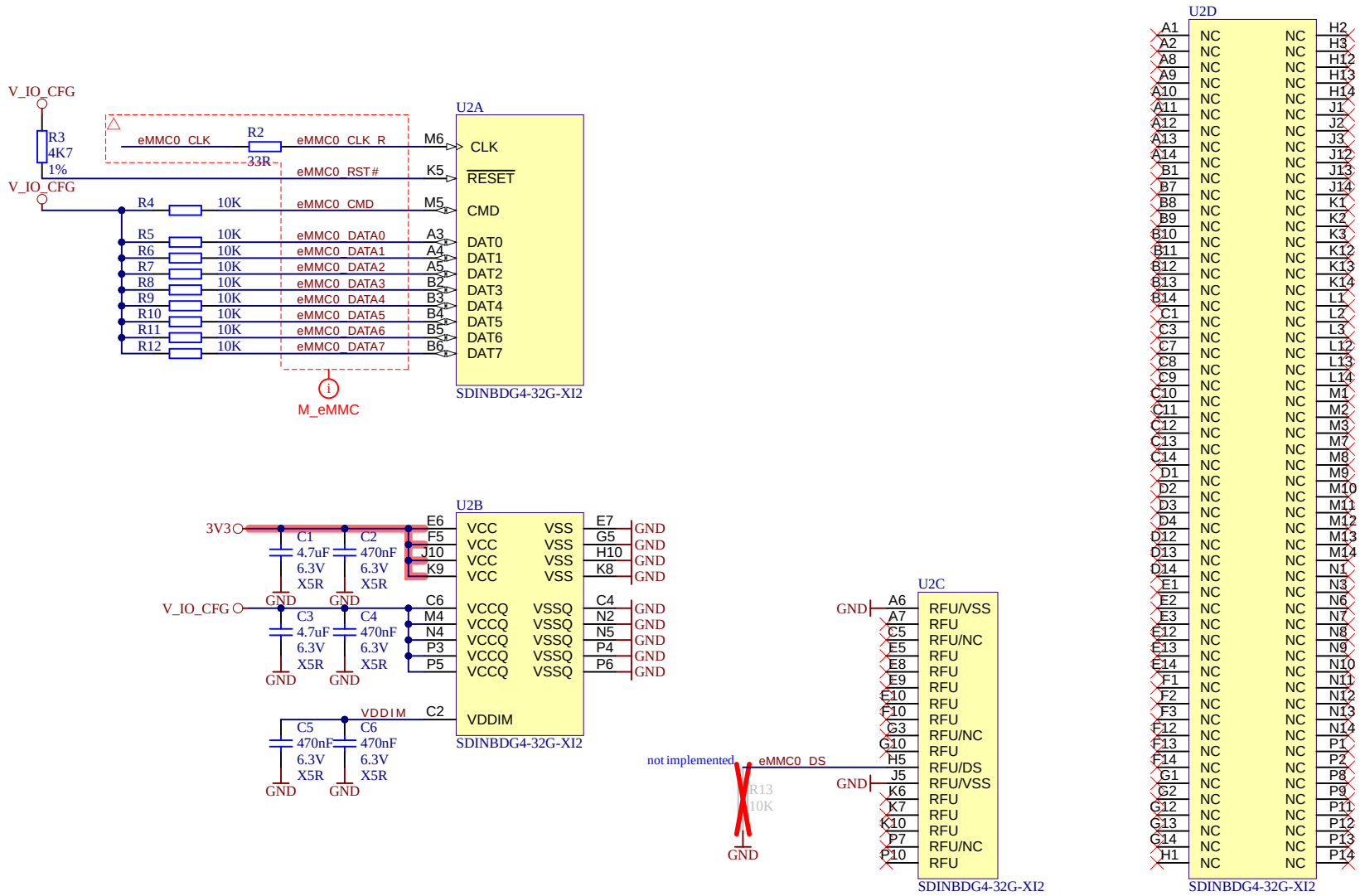

trenz electronic	Title: eMMC		
A4	Number: TE0955 EGBE32-A		Rev. 01
Date: 20.02.2025	Copyright: Trenz Electronic GmbH		Page 18 of 28
Filename: eMMC.SchDoc			

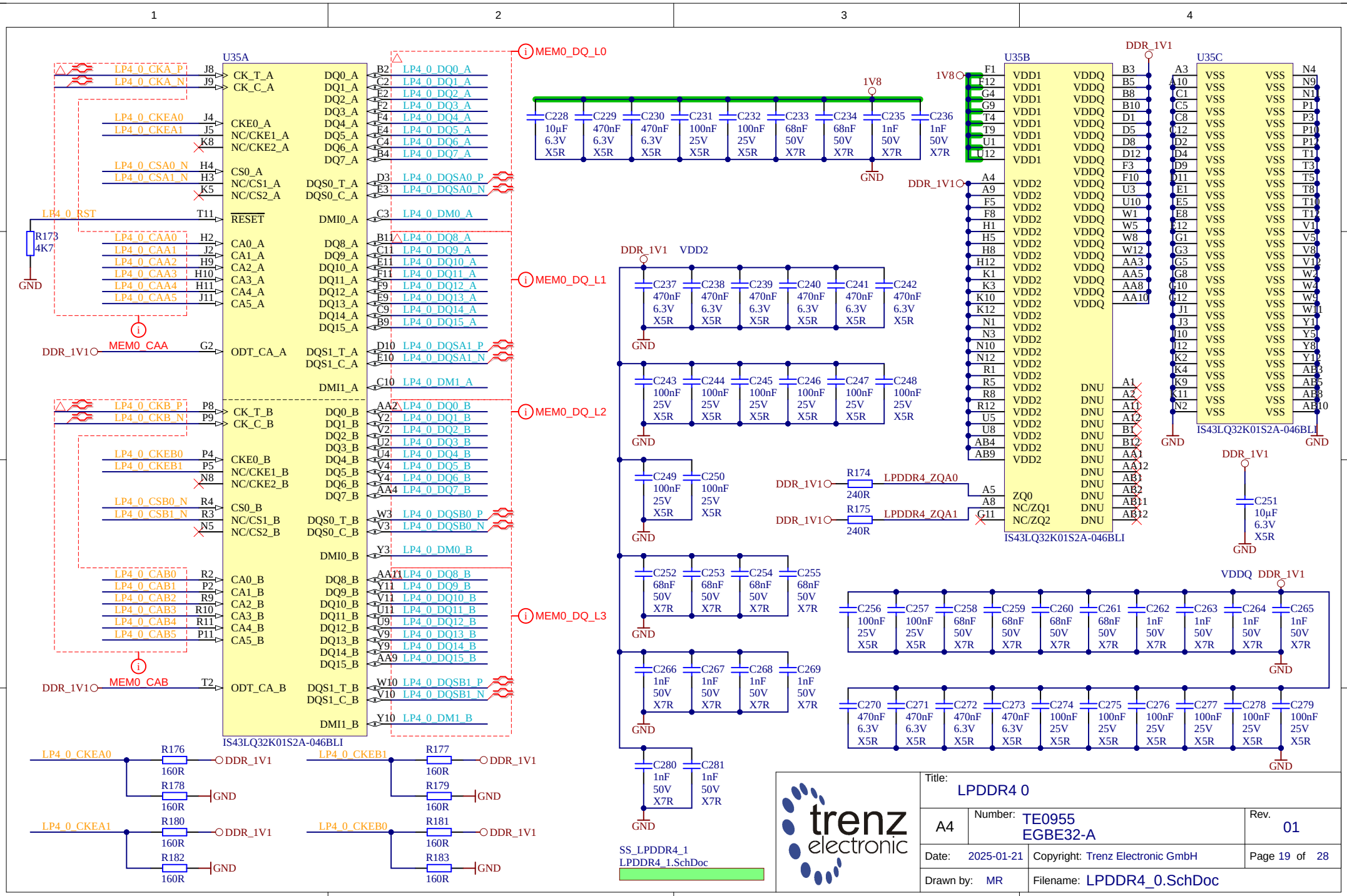
U35A
IS43LQ32K01S2A-046BLI
U35B
IS43LQ32K01S2A-046BLI
U35C
IS43LQ32K01S2A-046BLI
MEM0_DQ_L0
MEM0_DQ_L1
MEM0_DQ_L2
MEM0_DQ_L3
MEM0_CAA
MEM0_CAB
DDR_1V1
1V8
VDD2
VDDQ
GND
R173 4K7
LP4_0_RST
LPDDR4_ZQA0
LPDDR4_ZQA1
SS_LPDDR4_1
LPDDR4_1.SchDoc
Title: LPDDR4 0
A4
Number: TE0955 EGBE32-A
Rev. 01
Date: 2025-01-21
Copyright: Trenz Electronic GmbH
Page 19 of 28
Drawn by: MR
Filename: LPDDR4_0.SchDoc

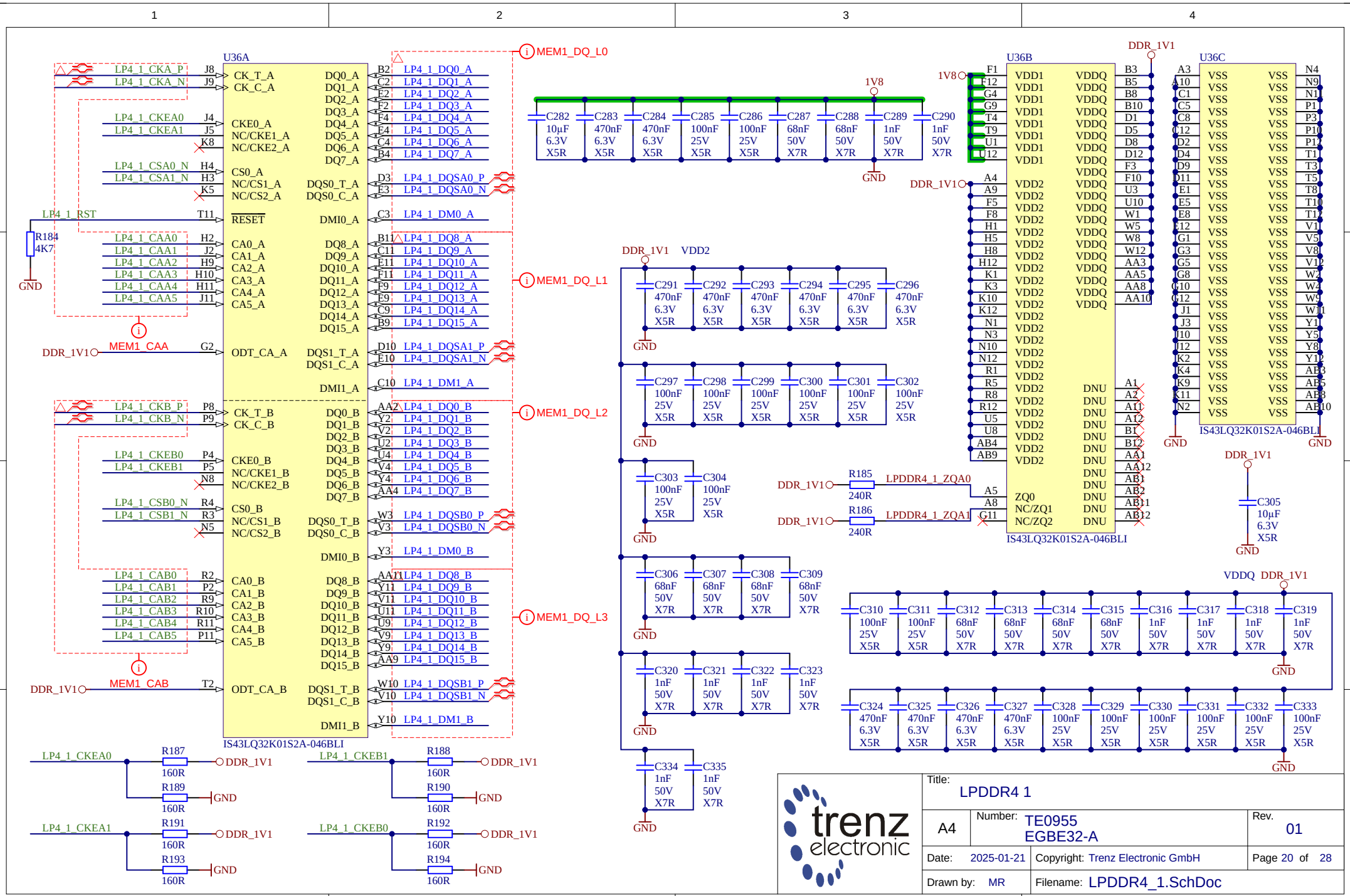
U36A
IS43LQ32K01S2A-046BLI
U36B
IS43LQ32K01S2A-046BLI
U36C
IS43LQ32K01S2A-046BLI
MEM1_DQ_L0
MEM1_DQ_L1
MEM1_DQ_L2
MEM1_DQ_L3
MEM1_CAA
MEM1_CAB
LP4_1_CKA_P
LP4_1_CKA_N
LP4_1_CKEA0
LP4_1_CKEA1
LP4_1_CSA0_N
LP4_1_CSA1_N
LP4_1_RST
LP4_1_CAA0
LP4_1_CAA1
LP4_1_CAA2
LP4_1_CAA3
LP4_1_CAA4
LP4_1_CAA5
LP4_1_CKB_P
LP4_1_CKB_N
LP4_1_CKEB0
LP4_1_CKEB1
LP4_1_CSB0_N
LP4_1_CSB1_N
LP4_1_CAB0
LP4_1_CAB1
LP4_1_CAB2
LP4_1_CAB3
LP4_1_CAB4
LP4_1_CAB5
LP4_1_DQSA0_P
LP4_1_DQSA0_N
LP4_1_DM0_A
LP4_1_DQSA1_P
LP4_1_DQSA1_N
LP4_1_DM1_A
LP4_1_DQSB0_P
LP4_1_DQSB0_N
LP4_1_DM0_B
LP4_1_DQSB1_P
LP4_1_DQSB1_N
LP4_1_DM1_B
R184 4K7
GND
DDR_1V1
1V8
VDD2
VDDQ
LPDDR4_1_ZQA0
LPDDR4_1_ZQA1
R185 240R
R186 240R
R187 160R
R188 160R
R189 160R
R190 160R
R191 160R
R192 160R
R193 160R
R194 160R
C282 10µF 6.3V X5R
C283 470nF 6.3V X5R
C284 470nF 6.3V X5R
C285 100nF 25V X5R
C286 100nF 25V X5R
C287 68nF 50V X7R
C288 68nF 50V X7R
C289 1nF 50V X7R
C290 1nF 50V X7R
C291 470nF 6.3V X5R
C292 470nF 6.3V X5R
C293 470nF 6.3V X5R
C294 470nF 6.3V X5R
C295 470nF 6.3V X5R
C296 470nF 6.3V X5R
C297 100nF 25V X5R
C298 100nF 25V X5R
C299 100nF 25V X5R
C300 100nF 25V X5R
C301 100nF 25V X5R
C302 100nF 25V X5R
C303 100nF 25V X5R
C304 100nF 25V X5R
C305 10µF 6.3V X5R
C306 68nF 50V X7R
C307 68nF 50V X7R
C308 68nF 50V X7R
C309 68nF 50V X7R
C310 100nF 25V X5R
C311 100nF 25V X5R
C312 68nF 50V X7R
C313 68nF 50V X7R
C314 68nF 50V X7R
C315 68nF 50V X7R
C316 1nF 50V X7R
C317 1nF 50V X7R
C318 1nF 50V X7R
C319 1nF 50V X7R
C320 1nF 50V X7R
C321 1nF 50V X7R
C322 1nF 50V X7R
C323 1nF 50V X7R
C324 470nF 6.3V X5R
C325 470nF 6.3V X5R
C326 470nF 6.3V X5R
C327 470nF 6.3V X5R
C328 100nF 25V X5R
C329 100nF 25V X5R
C330 100nF 25V X5R
C331 100nF 25V X5R
C332 100nF 25V X5R
C333 100nF 25V X5R
C334 1nF 50V X7R
C335 1nF 50V X7R
trenz electronic
Title: LPDDR4 1
A4
Number: TE0955 EGBE32-A
Rev. 01
Date: 2025-01-21
Copyright: Trenz Electronic GmbH
Page 20 of 28
Drawn by: MR
Filename: LPDDR4_1.SchDoc

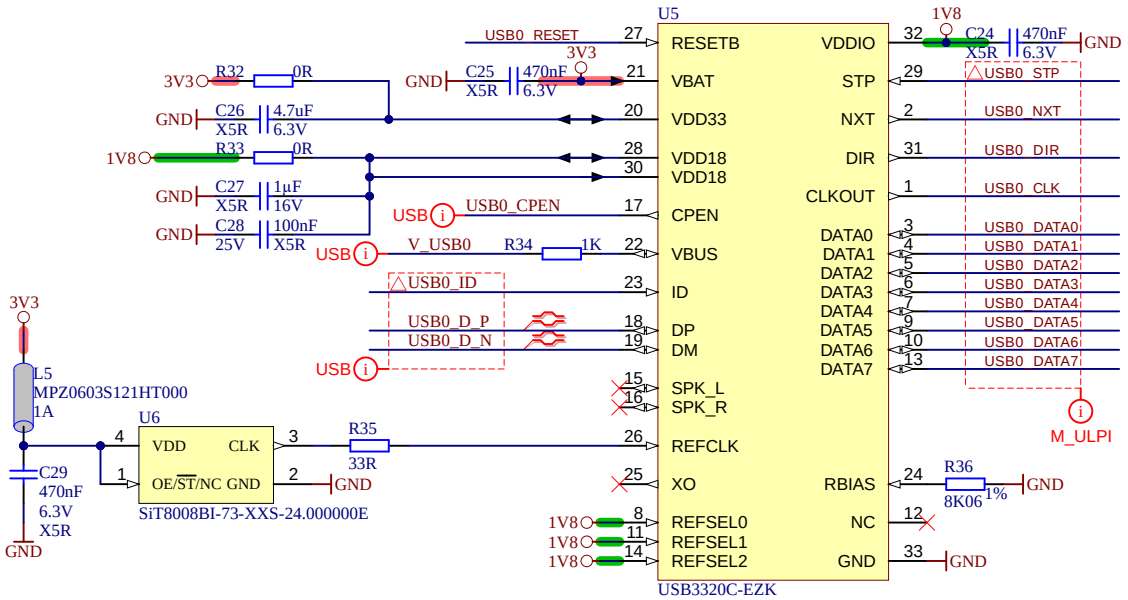

	R32	R33	C26	C28
USB3320	0R	0R	4.7 µF	0.1 µF
USB3340	DNP	DNP	1 µF	1 µF

Title: USBPHY			
A4	Number: TE0955 EGBE32-A		Rev. 01
Date: 20.02.2025	Copyright: Trenz Electronic GmbH		Page 21 of 28
Filename: USBPHY.SchDoc			

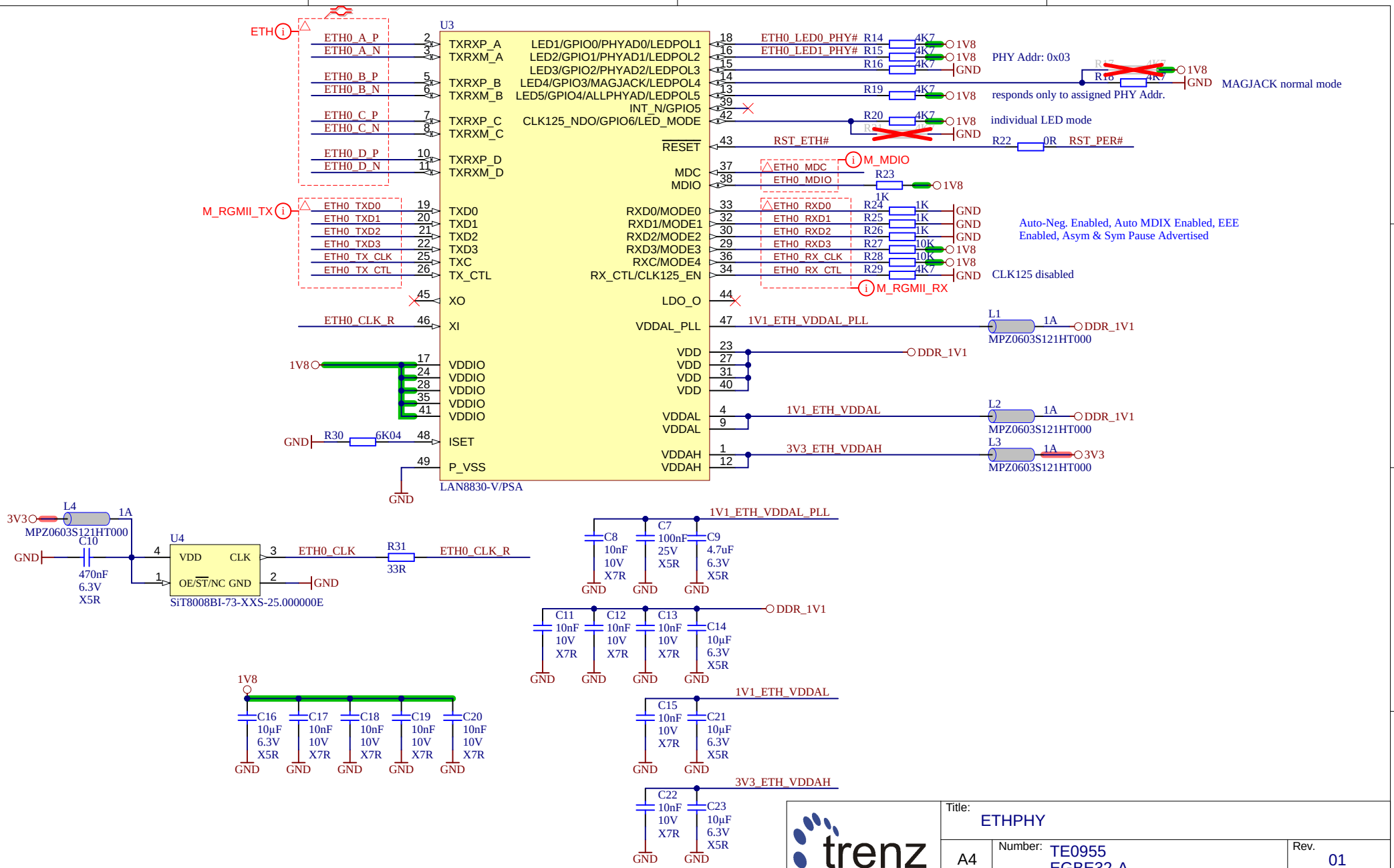

Title: ETHPHY			
A4	Number: TE0955 EGBE32-A		Rev. 01
Date: 20.02.2025	Copyright: Trenz Electronic GmbH		Page 22 of 28
Filename: ETHPHY.SchDoc			

Resets, Power Good, Enable

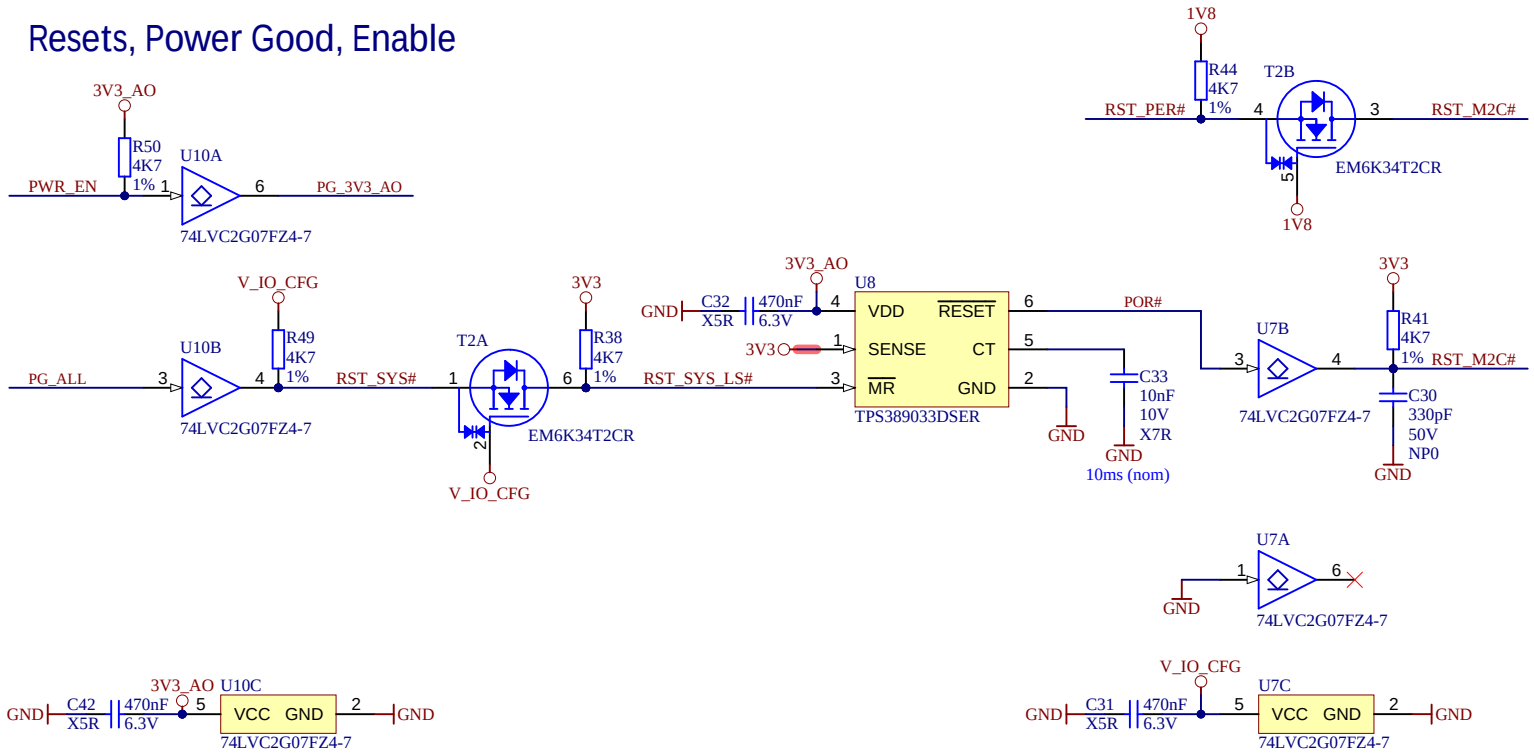

GPIOs

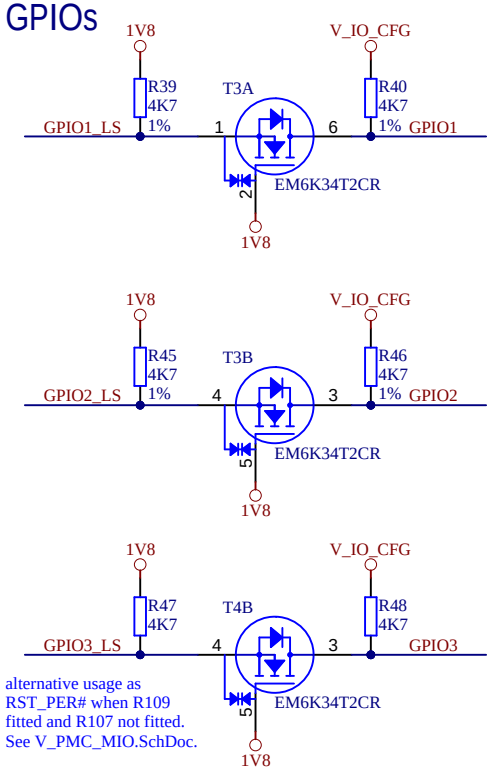

ETH LEDs

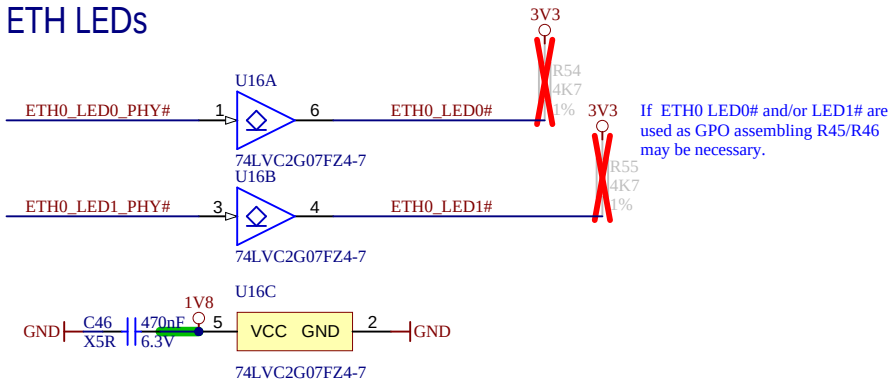

JTAG Testpoints

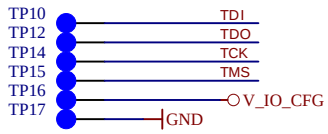

trenz electronic	Title: MISC 0		
A4	Number: TE0955 EGBE32-A		Rev. 01
Date: 08.10.2025	Copyright: Trenz Electronic GmbH		Page 23 of 28
Filename: MISC_0.SchDoc			

I2C (PMC/PS)

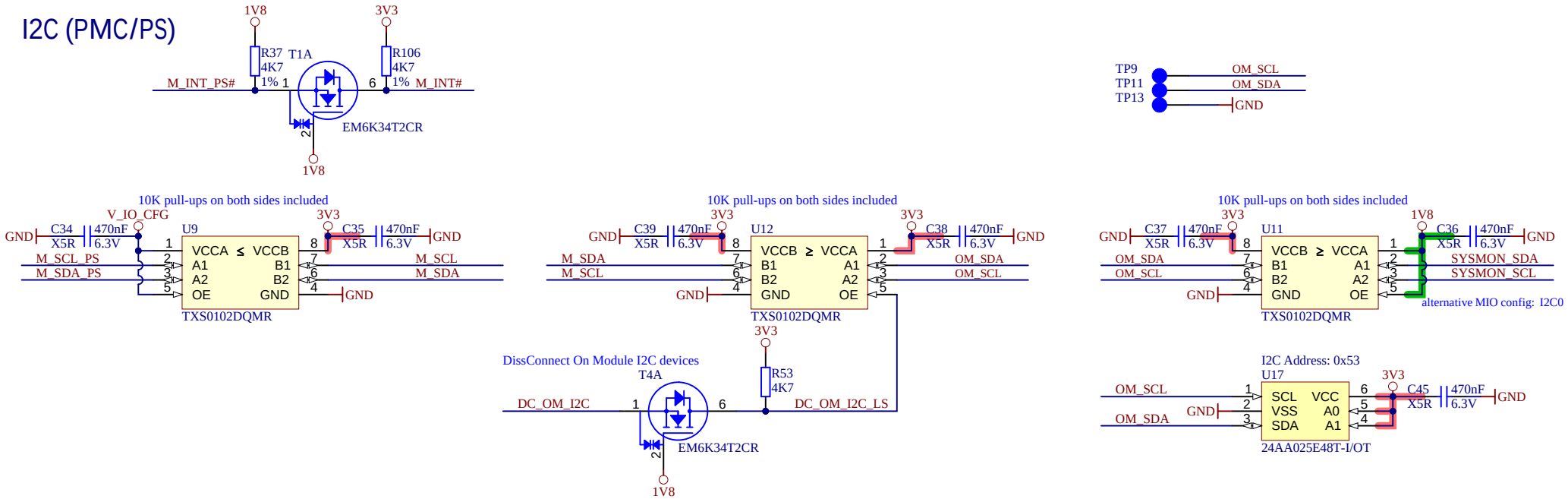

User I2C (PL)

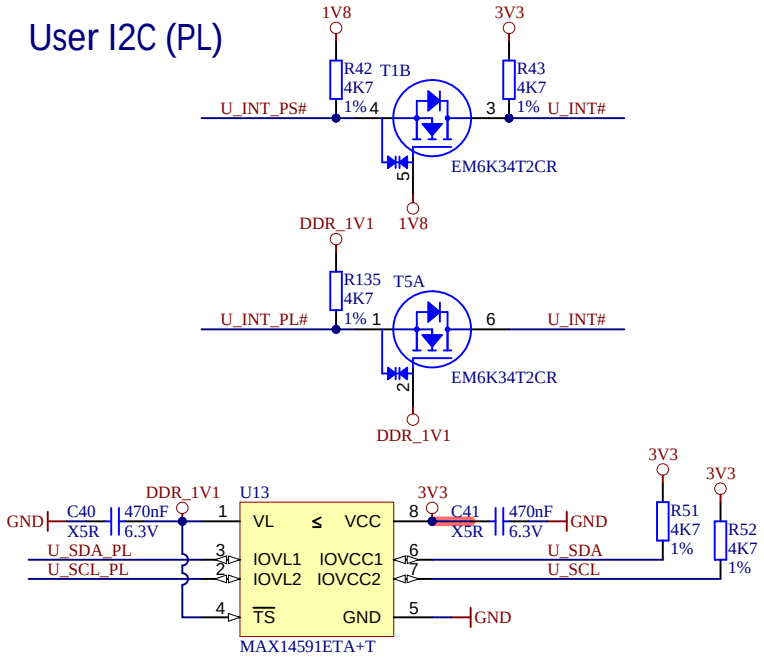

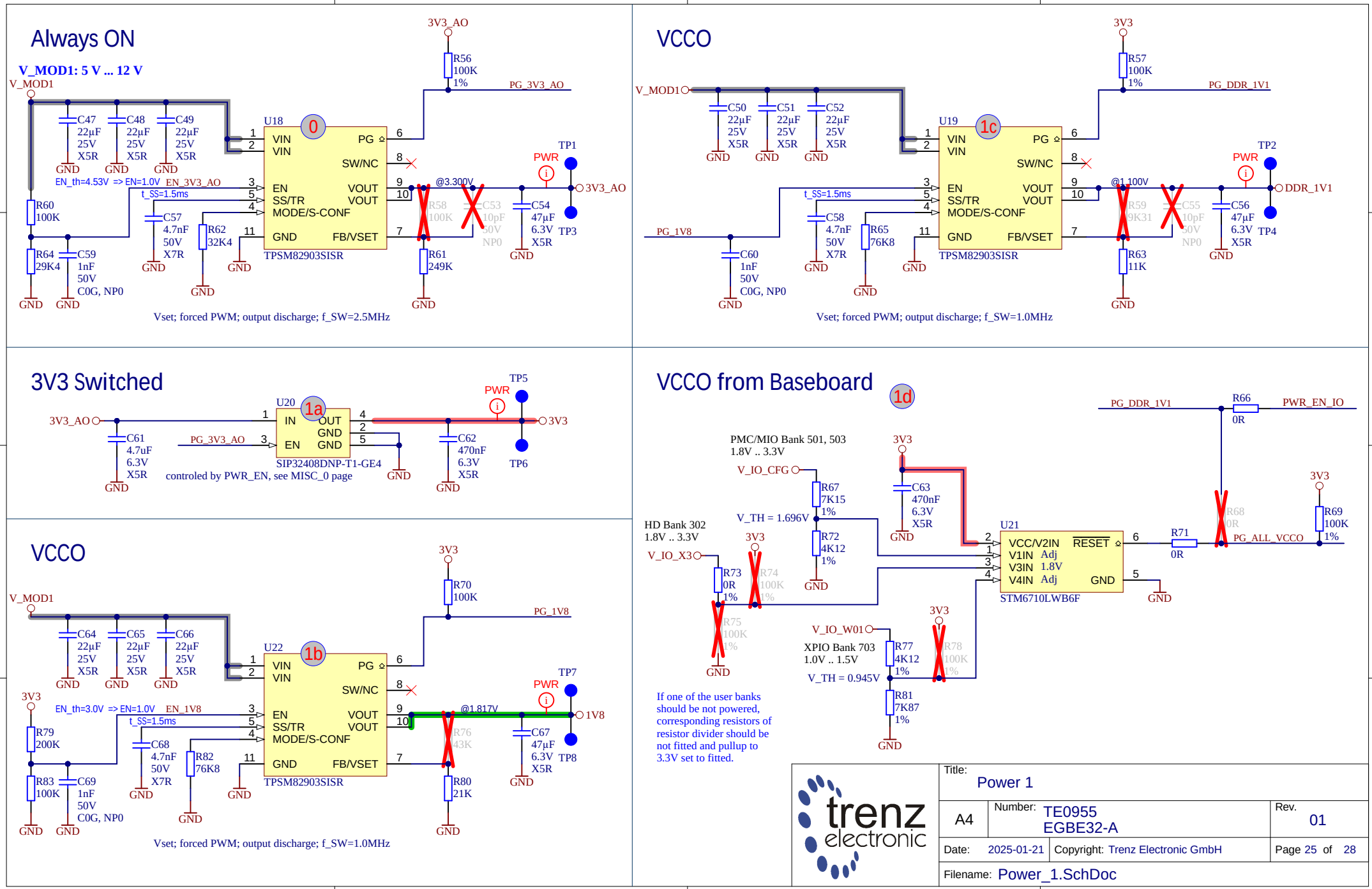
Always ON
V_MOD1: 5 V ... 12 V
V_MOD1
C47 22µF 25V X5R
C48 22µF 25V X5R
C49 22µF 25V X5R
GND
U18
0
VIN
VIN
PG
SW/NC
EN
SS/TR
MODE/S-CONF
VOUT
VOUT
GND
FB/VSET
TPSM82903SISR
3V3_AO
R56 100K 1%
PG_3V3_AO
TP1
PWR
3V3_AO
EN_th=4.53V => EN=1.0V
EN_3V3_AO
t_SS=1.5ms
@3.300V
R58 100K
C53 10pF 50V NP0
C54 47µF 6.3V X5R
TP3
R60 100K
R64 29K4
C59 1nF 50V C0G, NP0
C57 4.7nF 50V X7R
R62 32K4
R61 249K
Vset; forced PWM; output discharge; f_SW=2.5MHz
VCCO
V_MOD1
C50 22µF 25V X5R
C51 22µF 25V X5R
C52 22µF 25V X5R
U19
1c
3V3
R57 100K 1%
PG_DDR_1V1
TP2
PWR
DDR_1V1
t_SS=1.5ms
@1.100V
R59 9K31
C55 10pF 50V NP0
C56 47µF 6.3V X5R
TP4
PG_1V8
C60 1nF 50V C0G, NP0
C58 4.7nF 50V X7R
R65 76K8
R63 11K
Vset; forced PWM; output discharge; f_SW=1.0MHz
3V3 Switched
U20
1a
IN
OUT
GND
EN
GND
3V3_AO
C61 4.7uF 6.3V X5R
PG_3V3_AO
SIP32408DNP-T1-GE4
controled by PWR_EN, see MISC_0 page
C62 470nF 6.3V X5R
TP5
PWR
3V3
TP6
VCCO
V_MOD1
C64 22µF 25V X5R
C65 22µF 25V X5R
C66 22µF 25V X5R
U22
1b
3V3
R70 100K
PG_1V8
TP7
PWR
1V8
EN_th=3.0V => EN=1.0V
EN_1V8
t_SS=1.5ms
@1.817V
R76 43K
C67 47µF 6.3V X5R
TP8
R79 200K
R83 100K
C69 1nF 50V C0G, NP0
C68 4.7nF 50V X7R
R82 76K8
R80 21K
Vset; forced PWM; output discharge; f_SW=1.0MHz
VCCO from Baseboard
1d
PG_DDR_1V1
R66 0R
PWR_EN_IO
PMC/MIO Bank 501, 503
1.8V .. 3.3V
V_IO_CFG
R67 7K15 1%
V_TH = 1.696V
R72 4K12 1%
C63 470nF 6.3V X5R
HD Bank 302
1.8V .. 3.3V
V_IO_X3
R73 0R 1%
R74 100K 1%
R75 100K 1%
U21
VCC/V2IN
V1IN Adj
V3IN 1.8V
V4IN Adj
RESET
GND
STM6710LWB6F
R71 0R
R68 0R
PG_ALL_VCCO
R69 100K 1%
V_IO_W01
XPIO Bank 703
1.0V .. 1.5V
R77 4K12 1%
R78 100K 1%
V_TH = 0.945V
R81 7K87 1%
If one of the user banks should be not powered, corresponding resistors of resistor divider should be not fitted and pullup to 3.3V set to fitted.
trenz electronic
Title: Power 1
A4
Number: TE0955 EGBE32-A
Rev. 01
Date: 2025-01-21
Copyright: Trenz Electronic GmbH
Page 25 of 28
Filename: Power_1.SchDoc

VCCINT, VCC_PSLP, VCC_PSFP, VCC_PMC

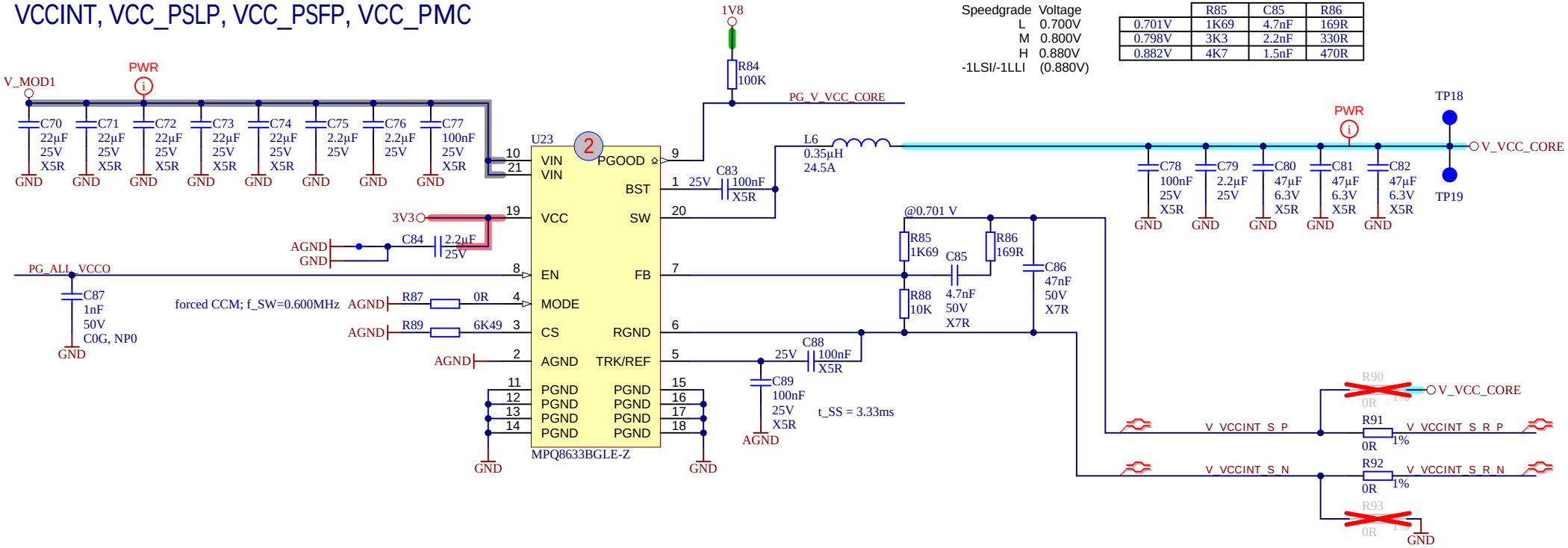

Voltage Sense Pins not availabe for Versal VM1102

Speedgrade	Voltage
L	0.700V
M	0.800V
H	0.880V
-1LSI/-1LLI	(0.880V)

	R85	C85	R86
0.701V	1K69	4.7nF	169R
0.798V	3K3	2.2nF	330R
0.882V	4K7	1.5nF	470R

Title: Power 2			
A4	Number: TE0955 EGBE32-A		Rev. 01
Date: 20.02.2025	Copyright: Trenz Electronic GmbH		Page 26 of 28
Filename: Power_2.SchDoc			

VCC_SOC, VCC_IO, VCC_RAM

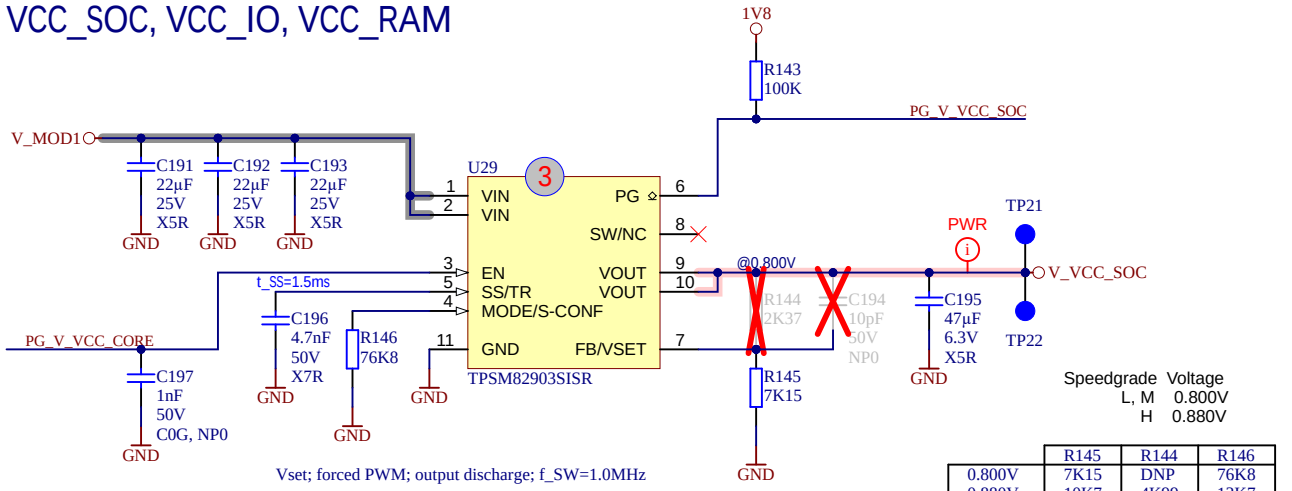

Vset; forced PWM; output discharge; f_SW=1.0MHz

Speedgrade Voltage
L, M 0.800V
H 0.880V

	R145	R144	R146
0.800V	7K15	DNP	76K8
0.880V	10K7	4K99	13K7

VCCAUX, VCCAUX_PMC, VCCAUX_SMON

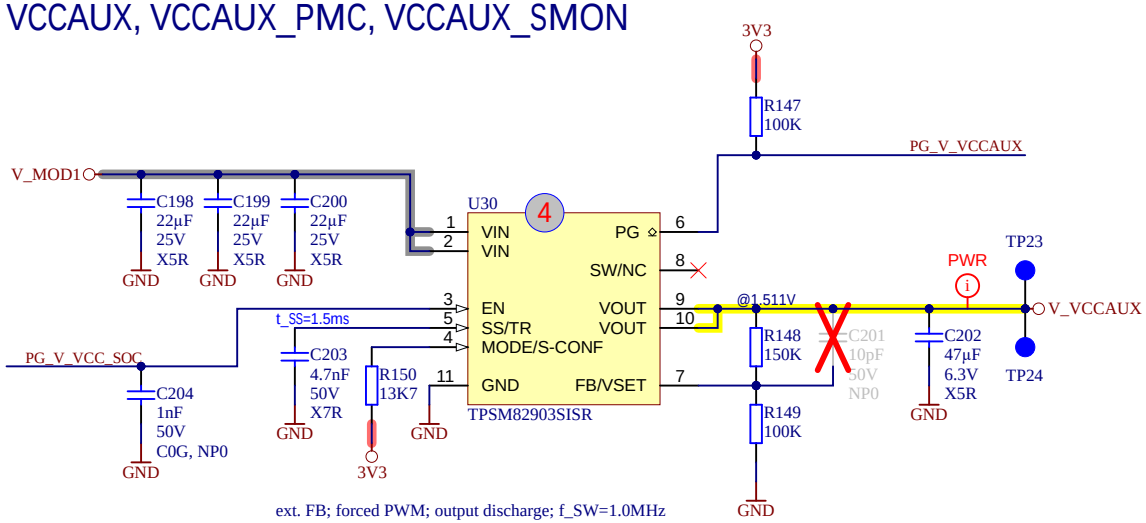

ext. FB; forced PWM; output discharge; f_SW=1.0MHz

VE2002, VE2102 have no transceiver

Title: Power 3			
A4	Number: TE0955 EGBE32-A		Rev. 01
Date: 2025-01-21	Copyright: Trenz Electronic GmbH		Page 27 of 28
Filename: Power_3.SchDoc			

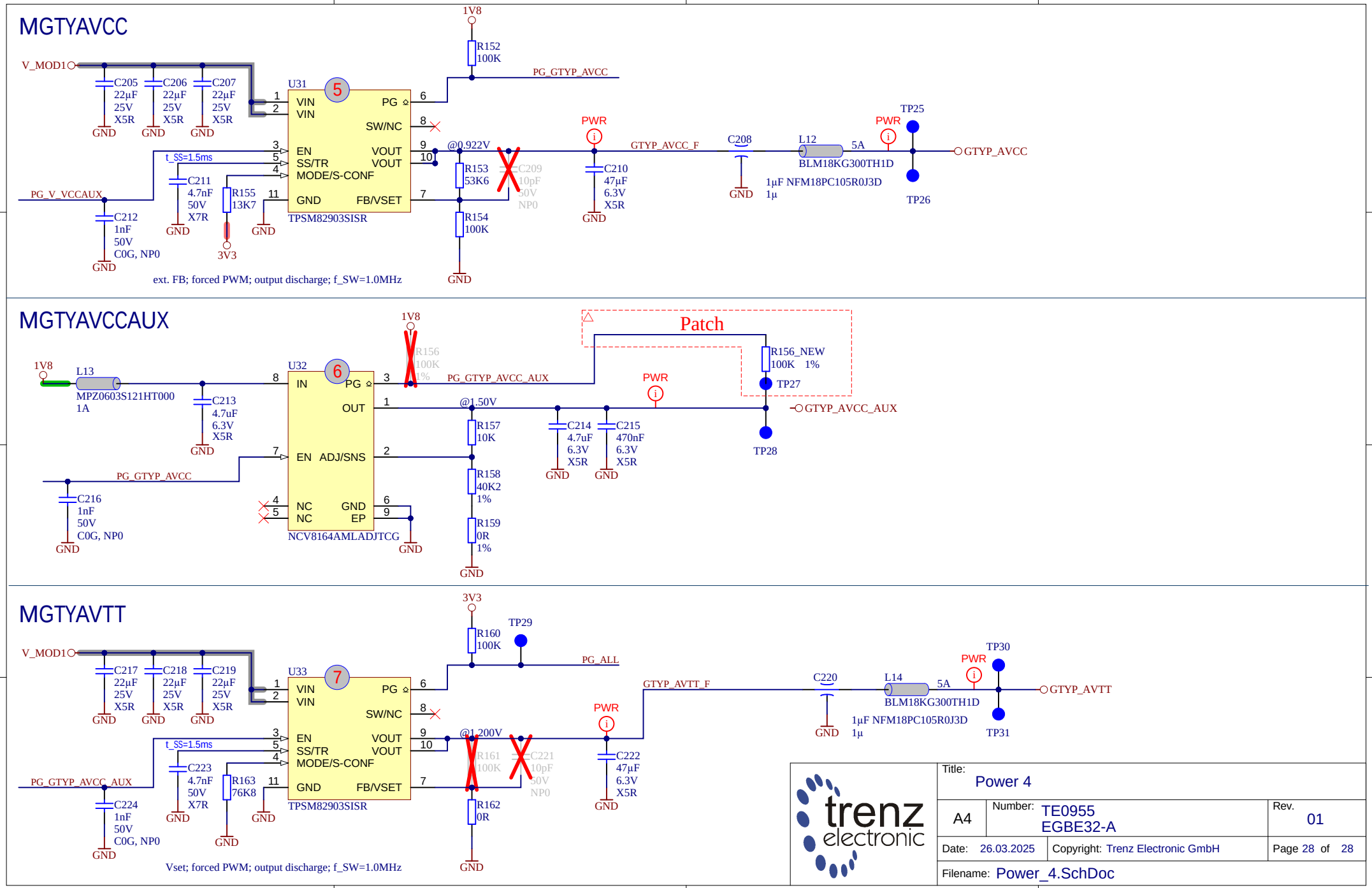
MGTYAVCC
V_MOD1
C205 22µF 25V X5R
C206 22µF 25V X5R
C207 22µF 25V X5R
GND
U31
5
VIN
VIN
PG
SW/NC
EN
SS/TR
MODE/S-CONF
GND
VOUT
VOUT
FB/VSET
TPSM82903SISR
1V8
R152 100K
PG_GTYP_AVCC
t_SS=1.5ms
C211 4.7nF 50V X7R
R155 13K7
3V3
PG_V_VCCAUX
C212 1nF 50V C0G, NP0
@0.922V
R153 53K6
C209 10pF 50V NP0
R154 100K
PWR
C210 47µF 6.3V X5R
GTYP_AVCC_F
C208
1µF NFM18PC105R0J3D 1µ
L12
BLM18KG300TH1D
5A
TP25
TP26
GTYP_AVCC
ext. FB; forced PWM; output discharge; f_SW=1.0MHz
MGTYAVCCAUX
1V8
L13
MPZ0603S121HT000 1A
C213 4.7uF 6.3V X5R
U32
6
IN
PG
OUT
EN
ADJ/SNS
NC
NC
GND
EP
NCV8164AMLADJTCG
R156 100K 1%
PG_GTYP_AVCC_AUX
Patch
R156_NEW 100K 1%
TP27
PWR
@1.50V
R157 10K
R158 40K2 1%
R159 0R 1%
C214 4.7uF 6.3V X5R
C215 470nF 6.3V X5R
TP28
GTYP_AVCC_AUX
PG_GTYP_AVCC
C216 1nF 50V C0G, NP0
MGTYAVTT
3V3
R160 100K
TP29
PG_ALL
V_MOD1
C217 22µF 25V X5R
C218 22µF 25V X5R
C219 22µF 25V X5R
U33
7
VIN
VIN
PG
SW/NC
EN
SS/TR
MODE/S-CONF
GND
VOUT
VOUT
FB/VSET
TPSM82903SISR
t_SS=1.5ms
C223 4.7nF 50V X7R
R163 76K8
PG_GTYP_AVCC_AUX
C224 1nF 50V C0G, NP0
@1.200V
R161 100K
C221 10pF 50V NP0
R162 0R
PWR
C222 47µF 6.3V X5R
GTYP_AVTT_F
C220
1µF NFM18PC105R0J3D 1µ
L14
BLM18KG300TH1D
5A
TP30
TP31
GTYP_AVTT
Vset; forced PWM; output discharge; f_SW=1.0MHz
trenz electronic
Title: Power 4
A4
Number: TE0955 EGBE32-A
Rev. 01
Date: 26.03.2025
Copyright: Trenz Electronic GmbH
Page 28 of 28
Filename: Power_4.SchDoc