DIALIGHT PART NUMBER	PACKAGING	LED COLOR
597-3029-207F	7" REEL	RED
597-3329-207F	7" REEL	InGan GREEN
597-3409-207F	7" REEL	YELLOW
597-3609-207F	7" REEL	BLUE
597-3909-207F	7" REEL	WHITE

RoHS COMPLIANT 597-3XX9-20XF

Part Numbers with the "F" suffix ending are RoHS Compliant.
For example: 597-3029-202F
Reel and bag packaging are marked with "RoHS Compliant" label or equivalent markings. These parts can be used with RoHS reflow profile. Parts can be wave soldered, dip soldered or hand soldered using typical lead-free soldering process with max 260°C temp. for 5 sec.

REV	ECN NO	REVISIONS	DRN	CKD	APP	DATE
A	———	NEW RELEASE	AJF	KLJ	NO	5-2-11
B	98270	REMOVED NOTE 12	LD	CS		10-10-22
C	127938	UPDATED LED SPECS, REVISED NOTE 10, REMOVED 597-3209-207F AND PART NUMBERS W/ 202F SUFFIX	LD	CS		4-14-25

ATTENTION:
OBSERVE PRECAUTIONS FOR HANDLING ELECTROSTATIC SENSITIVE DEVICES

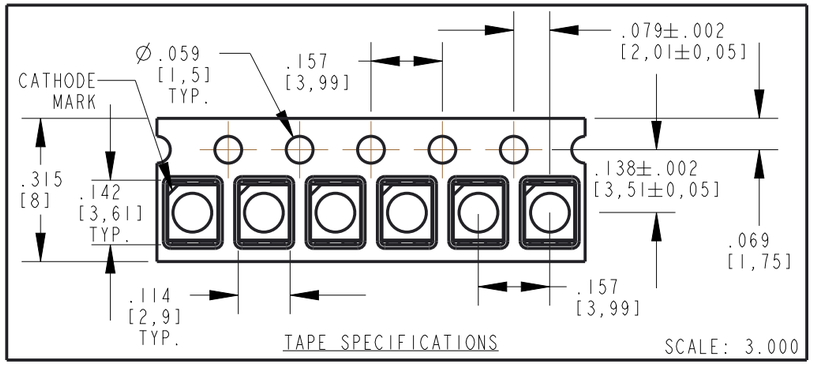

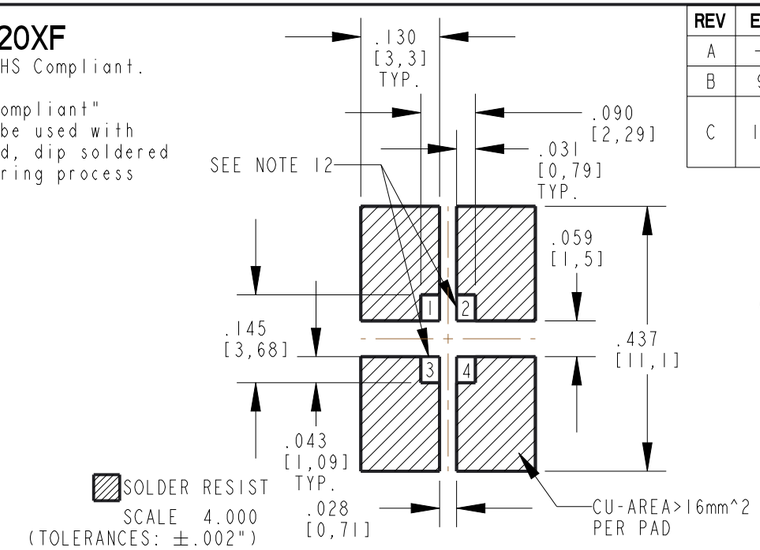

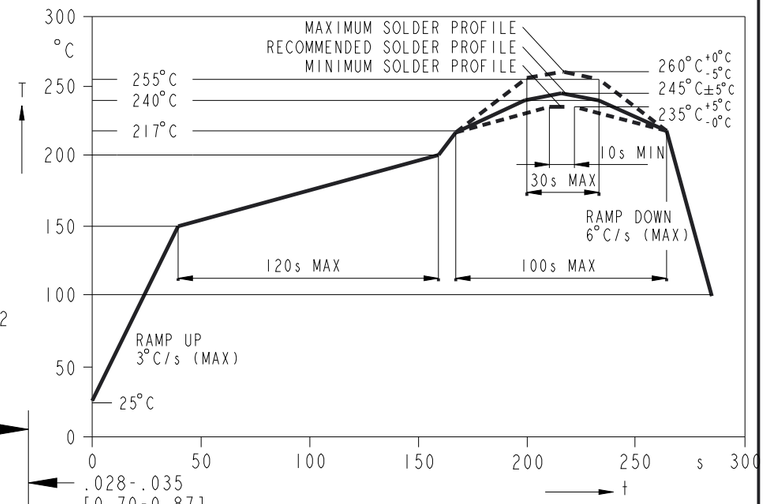

RECOMMENDED RoHS COMPLIANT REFLOW PROFILE

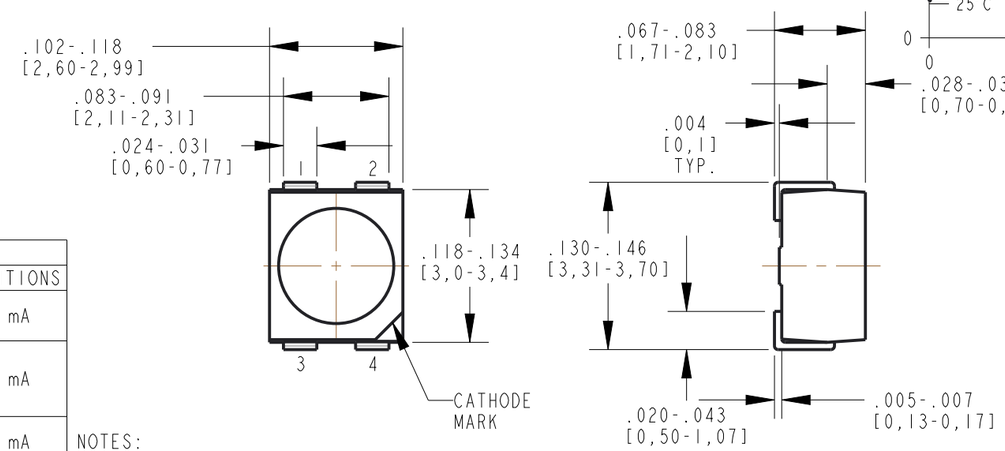

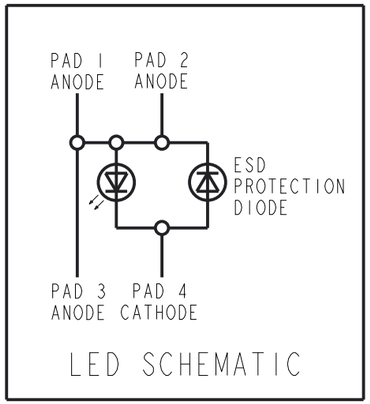

OPERATING CHARACTERISTICS AT 25°C AMBIENT						
LED CHARACTERISTICS	COLOR	MIN.	TYP.	MAX.	UNITS	TEST CONDITIONS
LUMINOUS INTENSITY	RED	1400		3550	mcd	I_F = 50 mA
	YELLOW	1400		5600		
	InGaN GREEN	1800		3550		I_F = 30 mA
	BLUE	355		900		
	WHITE	1400		3550		
PEAK WAVELENGTH	RED		634		nm	I_F = 50 mA
	YELLOW		597			
	InGaN GREEN		520			I_F = 30 mA
	BLUE		464			
DOMINANT WAVELENGTH	RED	620	625	630	nm	I_F = 50 mA
	YELLOW	583	590	595		
	InGaN GREEN	516	530	540		I_F = 30 mA
	BLUE	463	470	476		
	WHITE	SEE NOTE 10				
FORWARD VOLTAGE	RED	1.90	2.15	2.50	V	I_F = 50 mA
	YELLOW	2.05	2.15	2.65		
	InGaN GREEN	2.50	2.80	3.40		I_F = 30 mA
	BLUE	2.90	3.10	3.80		
	WHITE	2.90	3.10	3.80		
VIEWING ANGLE	ALL		120		DEGREES	

NOTES:

1. SOLDER ADHERANCE: EACH PAD PER MIL-STD-202E, METHOD 208C.
2. SUFFIX -202F FOR 20-PCS ON A SAMPLE STRIP.
3. SUFFIX -207F FOR 180mm DIA. REEL, 8mm WIDE TAPE, PACKAGED 2000 PCS PER REEL WITH A PITCH OF 4mm.
4. TAPE AND REEL AS PER EIA STANDARD 481-1, WITH CATHODE TOWARD SPROCKET.
5. LEDS NOT DESIGNED FOR REVERSE OPERATION.
6. DIALIGHT PART NUMBER: 597-3XX9-20XF.
7. TAPE AND REEL LEDS MAY REQUIRE RE-TAPING AFTER TWELVE MONTHS.
8. PIN NUMBERS FOR REFERENCE ONLY, DESIGNATION NON-EXISTENT ON PART.
9. DEVICES HAVE A MOISTURE SENSITIVITY LEVEL OF "2". CAUTION LABEL APPLIED AS PER JEDEC STD. 033.
10. CHROMATICITY COORDINATES FOR WHITE LED AT I_F = 30 mA : X=0.33, Y=0.33.
11. THIS ASSEMBLY CONTAINS ELECTROSTATIC DISCHARGE SENSITIVE DEVICES (ESDS). MAINTAIN ALL PRECAUTIONARY MEASURES DURING ASSEMBLY, HANDLING AND STORAGE IN ACCORDANCE WITH IPC-A-610.

ABSOLUTE MAXIMUM RATINGS AT 25°C AMBIENT	LED COLOR					UNITS
	RED	YELLOW	InGaN GREEN	BLUE	WHITE	
CONTINUOUS FORWARD CURRENT	70	70	50	50	50	mA
PEAK FORWARD CURRENT (t_p<10μs, D=0.1 FOR ORANGE, YELLOW; D=0.005 FOR RED, InGaN GREEN, BLUE)	100	100	400	300	300	mA
OPERATING TEMPERATURE	-40 TO +110					°C
STORAGE TEMPERATURE	-40 TO +110					°C

THIS DRAWING AND THE CONTENTS HEREIN ARE CONFIDENTIAL AND THE SOLE PROPERTY OF DIALIGHT CORP. REPRODUCTION OF THIS DRAWING OR CONSTRUCTION OF ANY PARTS WITHIN THIS DRAWING ARE FORBIDDEN WITHOUT THE WRITTEN CONSENT OF DIALIGHT CORP.

SCALE: 8.000
ALL DIM's: INCH (mm)
TOLERANCES: UNLESS OTHERWISE SPECIFIED
FRACTIONS: ±1/64
DECIMALS (.XX): ±.02
DECIMALS (.XXX): ±.004
ANGLES: ±3°
FINISH: -
FSCM 83330

DRAWING NUMBER: C-17824
REV: C
TITLE: POWER PLCC-4 SMT LEDS
MATERIAL: -

Dialight
1501 ROUTE 34 SOUTH
FARMINGDALE, NJ 07727
(732) 919-3119
www.dialight.com

SHEET 1 OF 1
FAMILY TABLE: