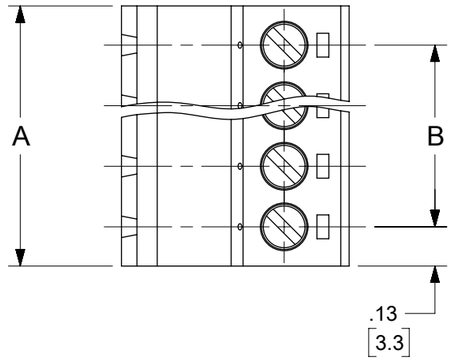

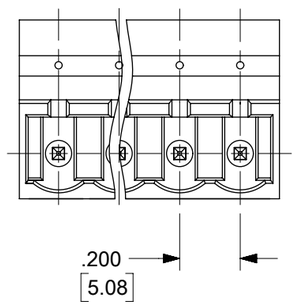

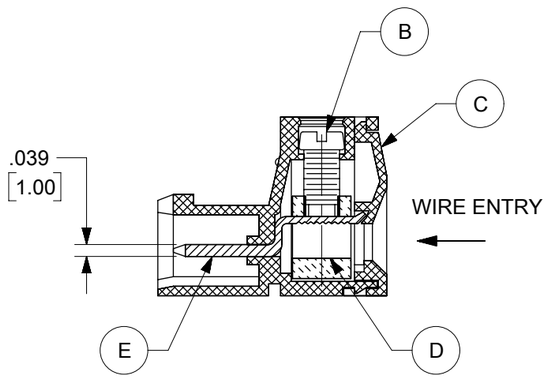

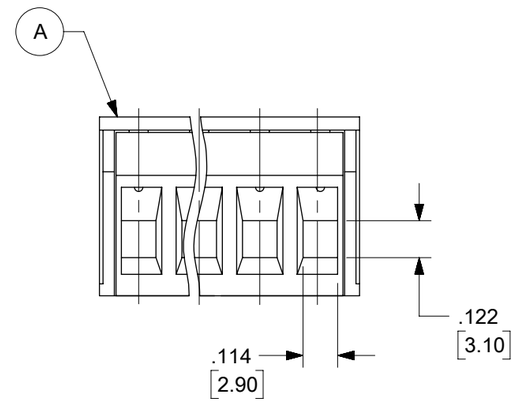

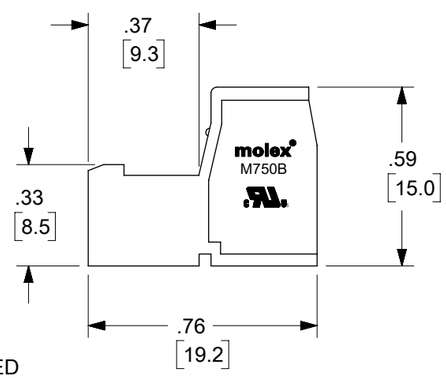

PART NUMBER DATA

CIRCUITS	PART NUMBER	ENGINEERING NUMBER	HOUSING COLOR	PART NUMBER	ENGINEERING NUMBER	HOUSING COLOR	A IN	A mm	B IN	B mm
2	397150002	M750B-16-2-02-3	GREEN	397151002	M750B-16-2-02-1	BLACK	0.46	11.7	0.200	5.08
3	397150003	M750B-16-2-03-3	GREEN		M750B-16-2-03-1	BLACK	0.66	16.7	0.400	10.16
4	397150004	M750B-16-2-04-3	GREEN		M750B-16-2-04-1	BLACK	0.86	21.8	0.600	15.24
5	397150005	M750B-16-2-05-3	GREEN		M750B-16-2-05-1	BLACK	1.06	26.9	0.800	20.32
6	397150006	M750B-16-2-06-3	GREEN		M750B-16-2-06-1	BLACK	1.26	32.0	1.000	25.40
7	397150007	M750B-16-2-07-3	GREEN		M750B-16-2-07-1	BLACK	1.46	37.1	1.200	30.48
8	397150008	M750B-16-2-08-3	GREEN		M750B-16-2-08-1	BLACK	1.66	42.1	1.400	35.56
9	397150009	M750B-16-2-09-3	GREEN		M750B-16-2-09-1	BLACK	1.86	47.2	1.600	40.64
10	397150010	M750B-16-2-10-3	GREEN		M750B-16-2-10-1	BLACK	2.06	52.3	1.800	45.72
11	397150011	M750B-16-2-11-3	GREEN		M750B-16-2-11-1	BLACK	2.26	57.4	2.000	50.80
12	397150012	M750B-16-2-12-3	GREEN		M750B-16-2-12-1	BLACK	2.46	62.5	2.200	55.88
13		M750B-16-2-13-3	GREEN		M750B-16-2-13-1	BLACK	2.66	67.5	2.400	60.96
14		M750B-16-2-14-3	GREEN		M750B-16-2-14-1	BLACK	2.86	72.6	2.600	66.04
15		M750B-16-2-15-3	GREEN		M750B-16-2-15-1	BLACK	3.06	77.7	2.800	71.12
16		M750B-16-2-16-3	GREEN		M750B-16-2-16-1	BLACK	3.26	82.8	3.000	76.20
17		M750B-16-2-17-3	GREEN		M750B-16-2-17-1	BLACK	3.46	87.9	3.200	81.28
18		M750B-16-2-18-3	GREEN		M750B-16-2-18-1	BLACK	3.66	92.9	3.400	86.36
19		M750B-16-2-19-3	GREEN		M750B-16-2-19-1	BLACK	3.86	98.0	3.600	91.44
20		M750B-16-2-20-3	GREEN		M750B-16-2-20-1	BLACK	4.06	103.1	3.800	96.52
21		M750B-16-2-21-3	GREEN		M750B-16-2-21-1	BLACK	4.26	108.2	4.000	101.59
22		M750B-16-2-22-3	GREEN		M750B-16-2-22-1	BLACK	4.46	113.3	4.200	106.67
23		M750B-16-2-23-3	GREEN		M750B-16-2-23-1	BLACK	4.66	118.3	4.400	111.75
24		M750B-16-2-24-3	GREEN		M750B-16-2-24-1	BLACK	4.86	123.4	4.600	116.83

REF. LAST 2 DIGITS OF PART NUMBER EQUALS CIRCUIT COUNT

TOLERANCES

MM	TOL	INCH	TOL
0-6	±0.25	0-.24	±.010
>6-30	±0.40	.24-1.18	±.016
>30-120	±0.50	1.18-4.76	±.020
>120	±0.80	>4.76	±.031

ENGINEERING NUMBER LEGEND

M750B-16-2-XX-3

SERIES — STYLE — PITCH — POLES — COLOR

CONTACT FACTORY FOR OPTIONAL COLORS

SPECIFICATIONS

1.MATERIAL:
- A. BODY : PA66.UL94 V-0
- B. SCREW: M3, STEEL.ZINC PLATED
- C. COVER: PA66.UL94 V-0
- D. CAGE: BRASS.NI PLATED
- E. TERMINAL :BRASS.TIN PLATED

2.WIRE SIZE: 24 ~ 12AWG
3.RATING: 250V,12A
4.MAX TORQUE : 4.4LBF.IN
5.WIRE STRIP LENGTH: .20in.(5.0mm)
6.OPERATING TEMPERATURE : -40°C TO +105°C
7.DIMS. SHOWN ARE FOR REFERENCE ONLY

THIS DRAWING CONTAINS INFORMATION THAT IS PROPRIETARY TO MOLEX ELECTRONIC TECHNOLOGIES, LLC AND SHOULD NOT BE USED WITHOUT WRITTEN PERMISSION

DIMENSION UNITS	SCALE
INCH/MM	NTS

GENERAL TOLERANCES (UNLESS SPECIFIED)

ANGULAR TOL	± °
4 PLACES	±
3 PLACES	±
2 PLACES	±
1 PLACE	±
0 PLACES	±

DRAFT WHERE APPLICABLE MUST REMAIN WITHIN DIMENSIONS

CURRENT REV DESC: RELEASE TO "GENERAL MARKET" RESTRICTION STATUS

EC NO: 773119
DRWN: WLEUNG 2024/01/03
CHK'D: JANEY 2024/01/03
APPR: HKNEELAND 2024/01/04

INITIAL REVISION:
DRWN: MBRZOZOWSKI 2018/09/12
APPR: JFMURPHY 2018/09/12

molex

PLUG, 5.08MM MALE HORIZONTAL

PRODUCT CUSTOMER DRAWING

DOCUMENT NUMBER	DOC TYPE	DOC PART	REVISION
397150004	PSD	000	B

THIRD ANGLE PROJECTION	DRAWING	SERIES	MATERIAL NUMBER	CUSTOMER	SHEET NUMBER
	B-SIZE	39715	SEE TABLE		1 OF 1

DOCUMENT STATUS	P1	RELEASE DATE	2024/01/04 23:19:59

FORMAT: master-tb-prod-B
REVISION: J1
DATE: 2021/05/01