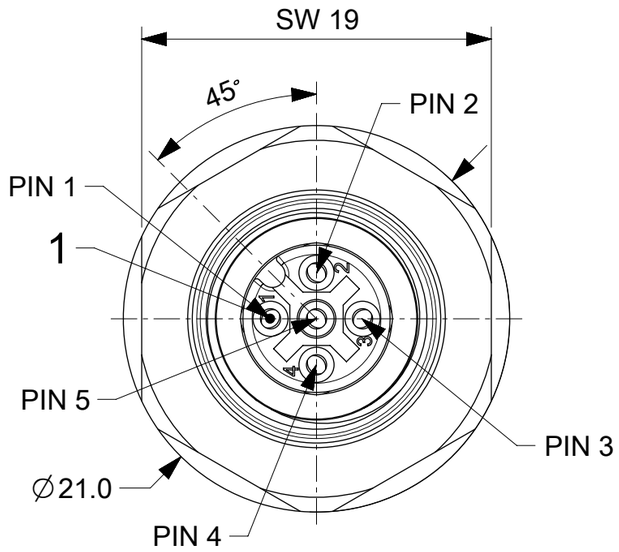

FEMALE FRONT FACE VIEW

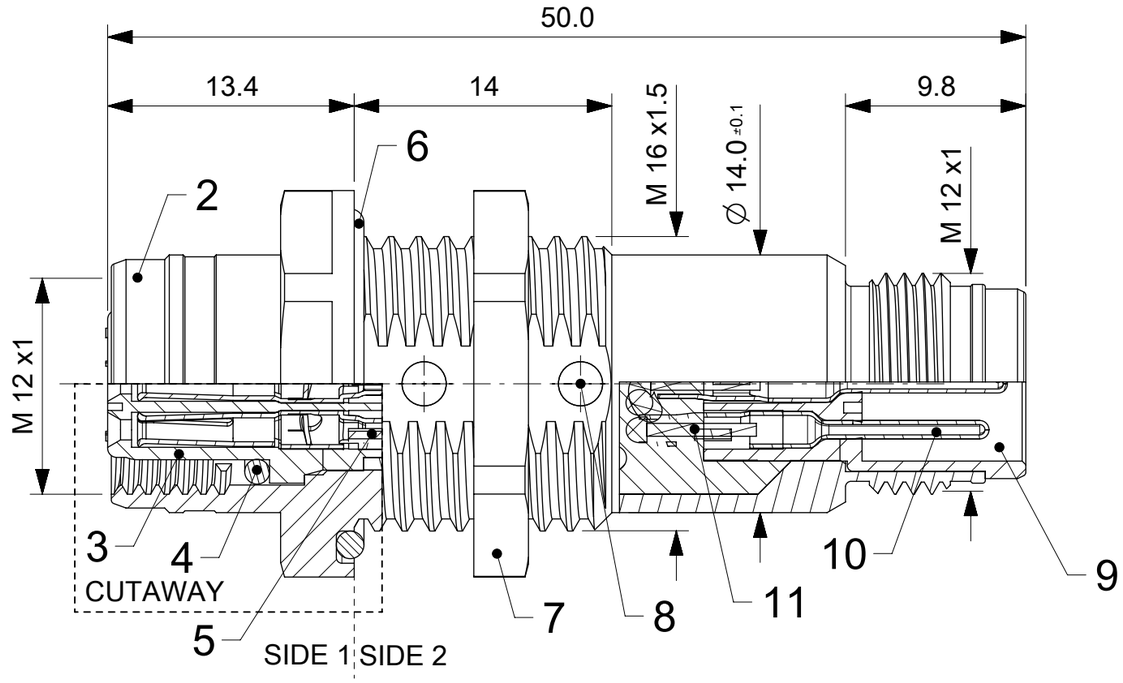

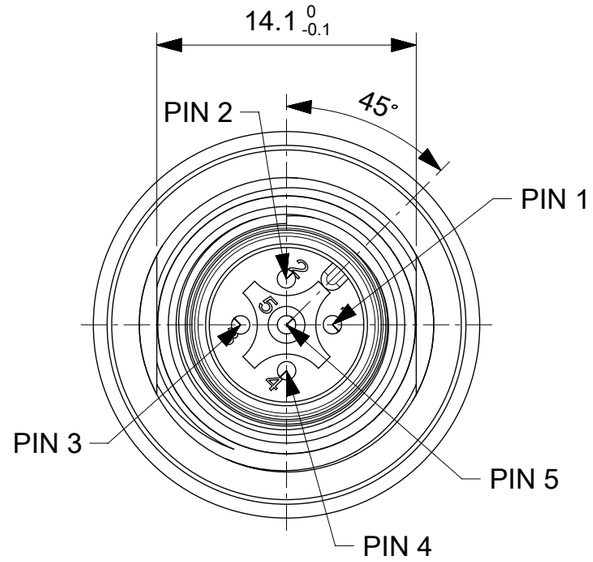

MALE FRONT FACE VIEW
(WITHOUT LOCK NUT)

WIRING DIAGRAM

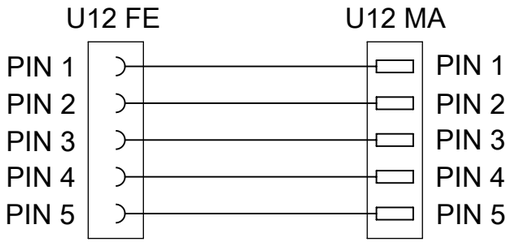

NOTES:

CONTACT CURRENT RATING: 4A
VOLTAGE RATING: 60V
B1 MATING/UNMATING TEMPERATURE: -25°C TO +85°C
STATIC/OPERATING TEMPERATURE: -40°C TO +85°C
INTERNATIONAL PROTECTION: SIDE 1 - IP 67/68/69K
SIDE 2 - IP65

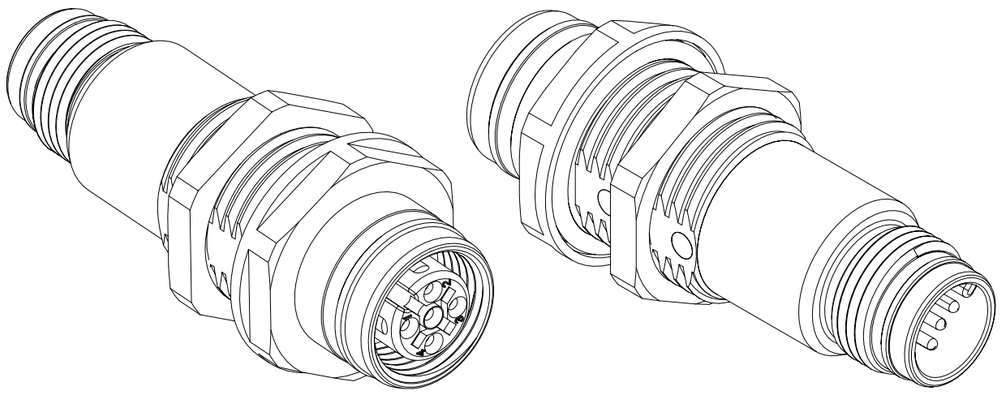

SCALE 2:1

RECOMMENDED
PANEL CUT OUT

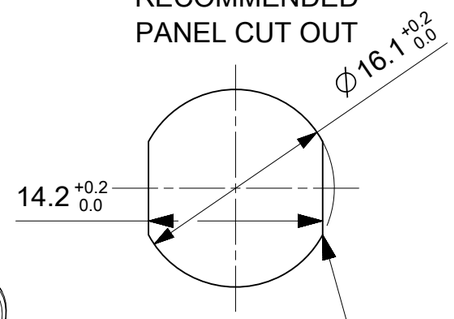

MAX. R 1.0 (4x)
DRAFT ANGLE 1°

ATLAS COPCO P/N (ENGINEERING P/N): 3176 0003 49

ITEM	QTY.	DESCRIPTION	MATERIAL	FINISH
11	-	HEAT-SHRINK;OD 2.4 DO 1.2	PE	NATURAL
10	5	CONTACT M12 MALE	BRASS	SELECTIVE Au OVER Ni
9	1	INSERT MALE 5P AC BLACK	PA	---
8	-	POTTING MATERIAL 2-CMPT	PUR-BASE	---
7	1	LOCKNUT SW19 M16x1.5	BRASS	NICKEL
6	1	ORING ∅16mm BLACK	EPDM	---
5	-	WIRE 0.35mm²	PVC	---
4	1	ORING ∅7.1mm RED	FPM	---
3	1	INSERT FEMALE 5P AC BLACK	PUR	---
2	1	SHELL U12/M16/U12	BRASS	NICKEL
1	5	CONTACT M12 FEMALE	BRONZE	SELECTIVE Au OVER Ni

THIS DRAWING CONTAINS INFORMATION THAT IS PROPRIETARY TO MOLEX ELECTRONIC TECHNOLOGIES, LLC AND SHOULD NOT BE USED WITHOUT WRITTEN PERMISSION

FUNCTIONAL SYMBOLS: FA = 0, FC = 0, FP = 0
DIVISIONAL SYMBOLS

DIMENSION UNITS	SCALE
mm	3:1

GENERAL TOLERANCES (UNLESS SPECIFIED)

ANGULAR TOL	±	1.0 °
4 PLACES	±	
3 PLACES	±	
2 PLACES	±	0.05
1 PLACE	±	0.3
0 PLACES	±	0.5

DRAFT WHERE APPLICABLE MUST REMAIN WITHIN DIMENSIONS

CURRENT REV DESC: UPDATED THE TEMPERATURE RATINGS INFORMATION

EC NO: 827975
DRWN: VHANDI 2025/07/08
CHK'D: RSILLER 2025/07/10
APPR: RSILLER 2025/07/10

INITIAL REVISION:
DRWN: JMARSZALEK 2016/08/10
APPR: RSILLER 2016/08/29

THIRD ANGLE PROJECTION

molex

REC U12 U12 5P AC FE MA M16 BULKHEAD

PRODUCT CUSTOMER DRAWING

DRAWING	SERIES	DOCUMENT NUMBER	DOC TYPE	DOC PART	REVISION
A3-SIZE	120084	1200848168	PSD	000	B1

MATERIAL NUMBER	CUSTOMER	SHEET NUMBER
1200848168	GENERAL MARKET	1 OF 1

DOCUMENT STATUS	P1	RELEASE DATE	2025/07/10 12:02:41

FORMAT: master-tb-prod-A3
REVISION: J1
DATE: 2021/05/01