| PART NUMBER | ENGINEERING NUMBER | MOUNT OPTION | PLATING | MAT'L. | PACKAGING |
|---|---|---|---|---|---|
| 39-31-1032 | 5569-03A4-BL | 4 | BLANK | BL | BULK |
| 39-30-3035 | 5569-03A4 | 4 | BLANK | BLANK | |
| 39-30-4033 | 5569-03A4GS2 | 4 | 15 GOLD | BLANK | |
| 39-30-3037 | 5569-03A4G | 4 | 30 GOLD | BLANK | |
| 39-30-3032 | 5569-03A3-210 | 3 | BLANK | 210 | TRAY |
| 39-30-3034 | 5569-03A3G-210 | 3 | 30 GOLD | | |
| 39-30-3036 | 5569-03A4-210 | 4 | BLANK | | BULK |
| 39-30-4030 | 5569-03A4G2-210 | 4 | 15 GOLD | | |
| 39-30-3038 | 5569-03A4G-210 | 4 | 30 GOLD | 210 | |
| NO E.D.P. | 5569-03A5G | 5 | 30 GOLD | BLANK | |
| NO E.D.P. | 5569-03A5MS | 5 | TIN/NICKEL | BLANK | |
| NO E.D.P. | 5569-03A5G-210 | 5 | 30 GOLD | 210 | |
| 39-34-3037 | 5569-03A5MS-210 | 5 | TIN/NICKEL | 210 | |
| 46999-0700 | 5569-03A8MS-130 | 8 | TIN/NICKEL | 130 | TRAY |

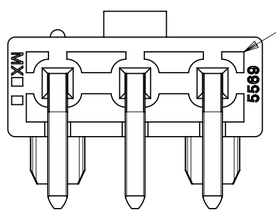


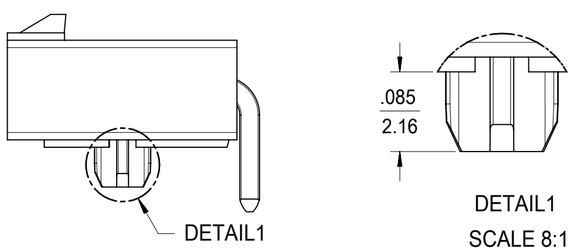


PRESS FIT OPTION

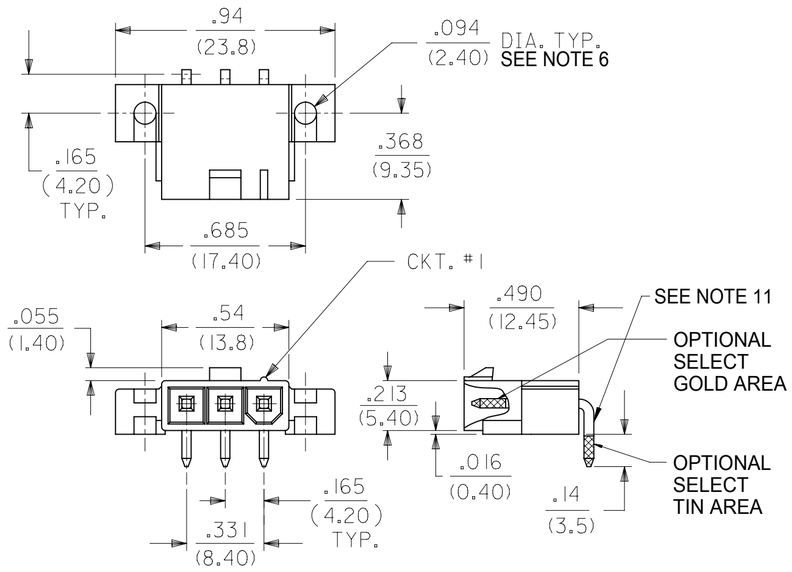


RIGHT ANGLE HEADER
(SCREW MOUNT)

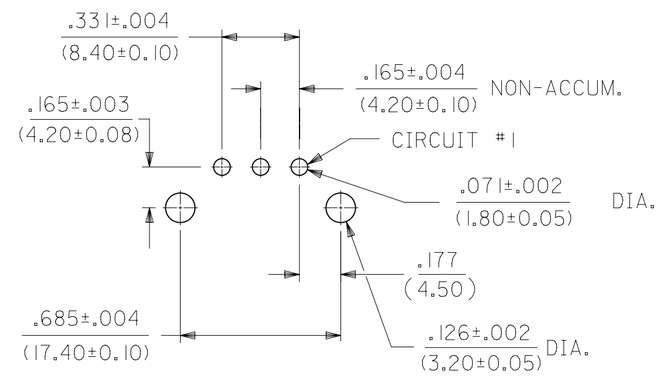


RECOMMENDED HOLE LAYOUT FOR
.070/(1.78) MAX. THICK P.C. BOARD
VIEWED FROM COMPONENT SIDE

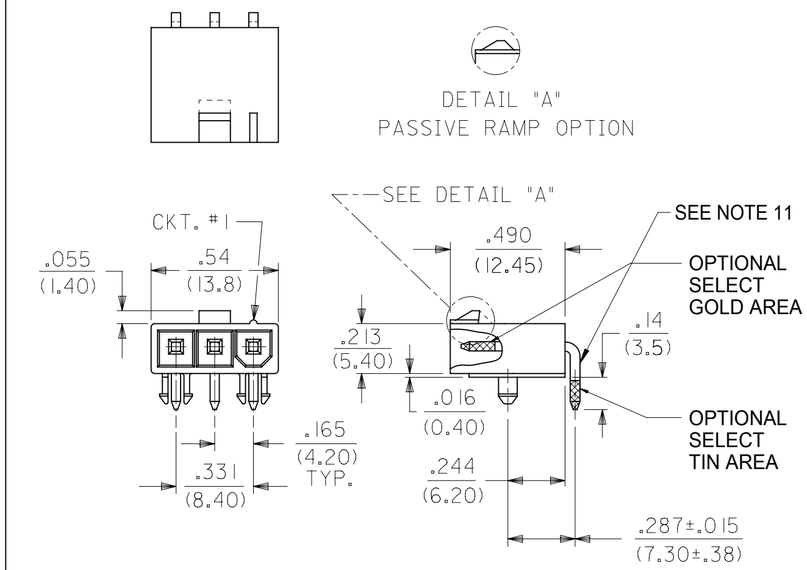


RIGHT ANGLE HEADER
(PEG MOUNT)

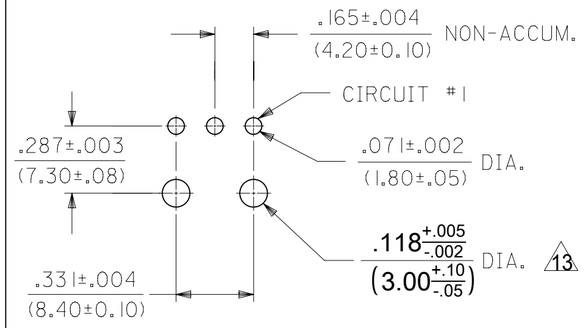


RECOMMENDED HOLE LAYOUT FOR
.070/(1.78) MAX. THICK P.C. BOARD
VIEWED FROM COMPONENT SIDE

NOTES:

1) HOUSING MATERIAL:
"BLANK" = NYLON 6/6, U.L. 94V-2, COLOR: NATURAL.
130 = LCP, U.L. 94V-0, COLOR: BLACK
IEC 60335-1, 5TH EDITION GLOW WIRE CAPABLE
210 = NYLON 6/6, U.L. 94V-0, COLOR: NATURAL.
BL = NYLON 6/6, U.L. 94V-2, COLOR: BLACK.
TERMINAL MATERIAL: BRASS, ALLOY

2) TERMINAL PLATING:
"BLANK," MS - .000100/(0.00254) MIN. MATTE TIN OVER .000050/(0.00127) MIN. NICKEL
G - .000030/(.00076) MIN. SELECT GOLD, .000100/(.00254) MIN. SELECT MATTE TIN OVER .000050/(.00127) MIN. NICKEL OVERALL.
G2,GS2 - .000015/(.00038) MIN. SELECT GOLD, .000100/(.0254) MIN. SELECT MATTE TIN OVER .000050/(.00127) MIN. NICKEL OVERALL.

3) PRODUCT SPECIFICATION: PS-5556-001

4) PACKAGING SPECIFICATION: BULK PACK PER PK-5569-002
TRAY PACK PER PK-5569-005

5) PART MATES WITH MOLEX RECEPTACLE #5557,46994 AND 200453.

6) PART IS DESIGNED FOR USE WITH #4 OR M3 SELF TAPPING SCREWS.

7) DISCOLORATION IN THE BANDOLIER CARRIER AREA OF THE PIN IS INHERENT TO THE PLATING PROCESS AND IS DUE TO THE MASKING EFFECT OF THE CARRIER. THIS DISCOLORATION IS IN A NON-FUNCTIONAL AREA OF THE PIN AND WILL NOT AFFECT THE PERFORMANCE OF THE HEADER ASSEMBLY.

8) CONNECTORS ARE NOT BE BE MATED OR UNMATED WHILE CIRCUITS ARE LIVE.

9) PARTS ARE NOT DESIGNED FOR CURRENT SHARING.

10) PART CONFORMS TO CLASS "B" REQUIREMENTS OF "COSMETIC SPECIFICATION PS-45499-002.'"

11) FORMING MARKS ON PINS ARE ACCEPTABLE

12 CORNER CORE-OUTS ARE OPTIONAL AND MAY OR MAY NOT BE PRESENT

13 HOLE TOLERANCE FOR PART NUMBER 46999-0700 IS ±.001 / ±0.03

LEGEND

5569-03A**-*

SERIES NO.
CIRCUIT SIZE
ASSEMBLY
MOUNTING & RAMP OPTION
"3" = SCREW MOUNT, POSITIVE RAMP
"4" = PEG MOUNT, POSITIVE RAMP
"5" = PEG MOUNT, PASSIVE RAMP
"8" = PRESS FIT PEG, POSITIVE RAMP
HOUSING MAT'L. OPTION (SEE NOTE 1)
PLATING OPTION (SEE NOTE 2)

THIS DRAWING REPLACES DRAWING SDA-5569-03A**

THIS DRAWING CONTAINS INFORMATION THAT IS PROPRIETARY TO MOLEX ELECTRONIC TECHNOLOGIES, LLC AND SHOULD NOT BE USED WITHOUT WRITTEN PERMISSION

| DIMENSION UNITS | SCALE |
|---|---|
| IN/MM | NTS |

GENERAL TOLERANCES (UNLESS SPECIFIED)

| | MM | INCH |
|---|---|---|
| 4 PLACES | ± | ± |
| 3 PLACES | ± | ± 0.01 |
| 2 PLACES | ± 0.25 | ± 0.015 |
| 1 PLACE | ± 0.38 | ± |
| 0 PLACES | ± | ± |
| ANGULAR TOL | ± 3.0 ° | |

DRAFT WHERE APPLICABLE MUST REMAIN WITHIN DIMENSIONS

CURRENT REV DESC:

EC NO: 806008
DRWN: JERRYW8 2024/11/27
CHK'D: XQZHANG 2024/12/09
APPR: XQZHANG 2024/12/09

INITIAL REVISION:
DRWN: GEP 1990/09/20
APPR: FSMITH 2014/05/16

THIRD ANGLE PROJECTION | DRAWING: C-SIZE | SERIES: 5569

molex

RIGHT ANGLE HEADER ASSY,
3 CKT., SINGLE ROW, MINI-FIT JR. SERIES

PRODUCT CUSTOMER DRAWING

| DOCUMENT NUMBER | DOC TYPE | DOC PART | REVISION |
|---|---|---|---|
| 55690304-SD | PSD | 000 | A2 |

| MATERIAL NUMBER | CUSTOMER | SHEET NUMBER |
|---|---|---|
| SEE CHART | GENERAL MARKET | 1 OF 1 |

| DOCUMENT STATUS | P1 | RELEASE DATE | 2024/12/09 01:53:10 |
|---|---|---|---|

FORMAT: Eng-legs-master-B-prod-C
REVISION: E1
DATE: 2021/05/01