PART NUMBER	ENG. NUMBER	MATERIAL (SEE NOTE 1)
39-01-3028	5557-02R1-210	94V-0
39-01-3048	5557-04R1-210	94V-0
36-01-3022	5557-02R1	94V-2
39-01-3042	5557-04-R1	94V-2
39-01-6026	5557-02R1-BL	94V-2, BLACK
NO E.D.P	5557-04R1-BL	94V-2, BLACK

LEGEND:

5557 - ** R1- ***

BASE NUMBER

CKT. SIZE

RECEPTACLE
(WITH SIDE PULL TABS)

MATERIAL OPTION:
(SEE NOTE 1)

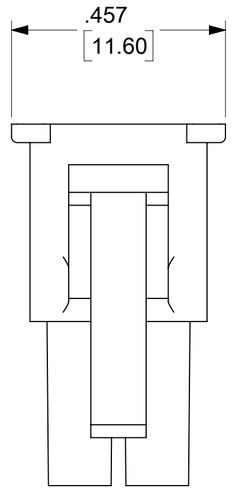

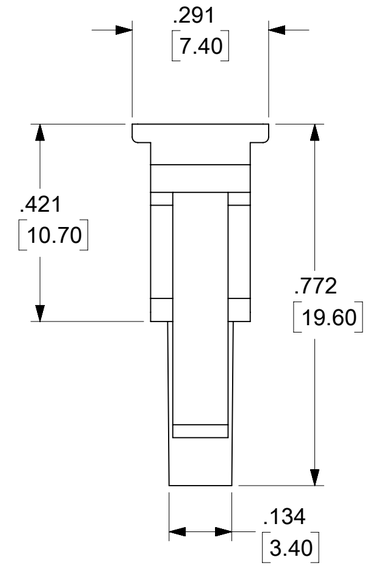

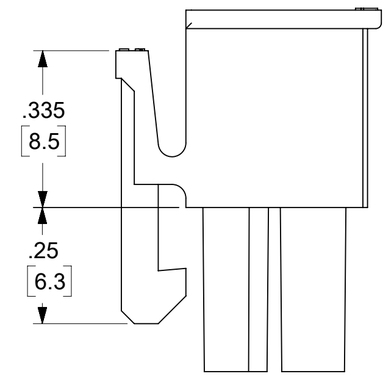

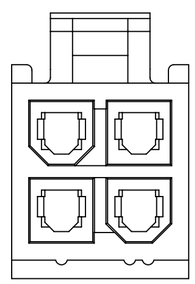

5557 - 04R - **
(WITHOUT SIDE PULL TABS)
(SHOWN FOR REFERENCE ONLY)

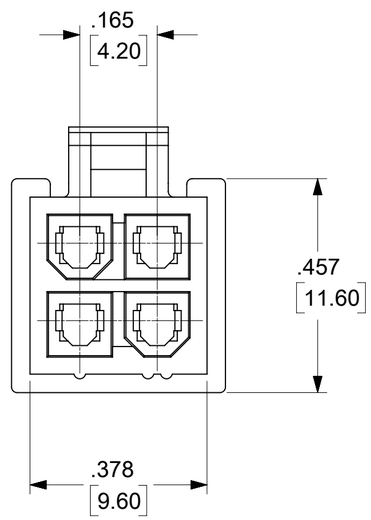

5557 - 04R1 - **

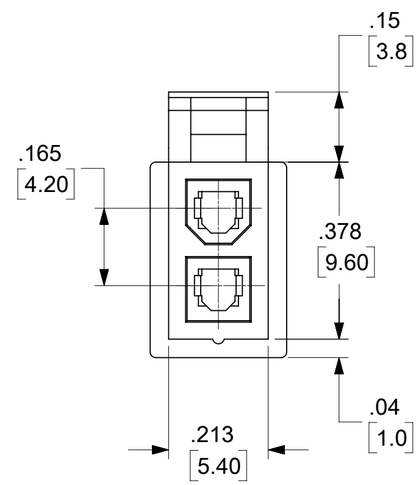

5557 - 02R1 - **

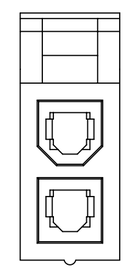

5557 - 02R - **
(WITHOUT SIDE PULL TABS)
(SHOWN FOR REFERENCE ONLY)

NOTE:
1. MATERIAL:
 "BLANK"= NYLON 6/6, U.L. 94V-2. COLOR : NATURAL.
 "210"= NYLON 6/6, U.L 94V-0. COLOR:NATURAL.
 "BL"= NYLON 6/6, U.L. 94V-2.COLOR:BLACK.
2. FINISH: NOT APPLICABLE.
3. PRODUCT SPECIFICATION : PS-5556-001.
4. PARTS TO BE PACKAGED PER PK-5557-002.
5. PART MATES WITH MOLEX PLUG #5559 AND 172762-0***.
6. PART IS FOR USE WITH MOLEX FEMALE TERMINAL #5556, #45750.
7. PART IS NOT DESIGNATED FOR CURRENT SHARING.
8. CONNECTORS ARE NOT TO BE MATED OR UNMATED WHILE CIRCUITS ARE LIVE.
9. WIRES ARE TO BE DRESSED IN SUCH A MANNER TO ALLOW THE TERMINALS TO FLOAT FREELY IN THE POCKET.
10. PART CONFORMS TO CLASS "B" REQUIREMENTS OF COSMETIC SPECIFICATION PS-45499-002.
11. BUBBLE IS ACCEPTABLE ON LATCH AREA.

THIS DRAWING REPLACES DRAWING SD-5557-**R1-*

DOCUMENT STATUS	P1	RELEASE DATE	2024/03/04 02:00:18

THIS DRAWING CONTAINS INFORMATION THAT IS PROPRIETARY TO MOLEX ELECTRONIC TECHNOLOGIES, LLC AND SHOULD NOT BE USED WITHOUT WRITTEN PERMISSION

DIMENSION UNITS	SCALE
IN/MM	NTS

GENERAL TOLERANCES (UNLESS SPECIFIED)

	MM	INCH
4 PLACES	±	±
3 PLACES	±	± 0.015
2 PLACES	± 0.38	± 0.015
1 PLACE	± 0.38	±
0 PLACES	±	±
ANGULAR TOL	± 0.5 °	

DRAFT WHERE APPLICABLE MUST REMAIN WITHIN DIMENSIONS

CURRENT REV DESC: RE-MASTRED THE DRAWING USING THE MODEL 55570210 AND 55570410

EC NO: 778837
DRWN: LIKITV 2024/02/01
CHK'D: XQZHANG 2024/03/04
APPR: XQZHANG 2024/03/04

INITIAL REVISION:
DRWN: GEP 1990/08/08
APPR: FSMITH 2012/05/04

THIRD ANGLE PROJECTION | DRAWING: C-SIZE | SERIES: 5557

molex

2 & 4 CKT RECEPTACLE,
MINI-FIT JR. SERIES WITH SIDE TABS

PRODUCT CUSTOMER DRAWING

DOCUMENT NUMBER	DOC TYPE	DOC PART	REVISION
55570001-SD	PSD	000	A3

MATERIAL NUMBER	CUSTOMER	SHEET NUMBER
SEE CHART	GENERAL MARKET	1 OF 1

FORMAT: Eng-legal-master-tb-prod-C
REVISION: E1
DATE: 2021/05/21