DESCRIPTION: M8 // 8P // M // PNL MNT // SOLDER CUP

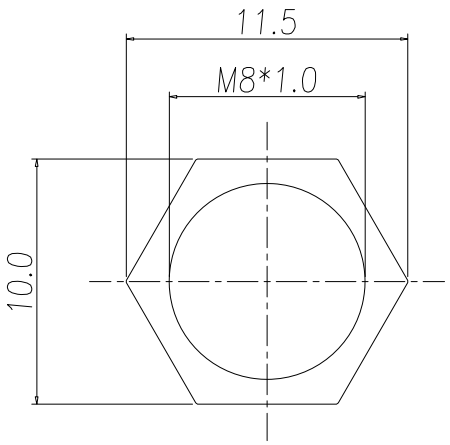

NUT

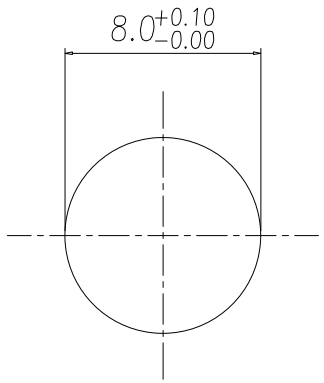

RECOMMENDPANEL CUT-OUT

NOTE:

MATERIAL	
HOUSING	PA, UL94V-0, BLACK
CONTACT	BRASS, 10u" GOLD
NUT	BRASS, NICKEL
SHELL	BRASS, NICKEL
O-RING	NBR
ELECTRICAL	
RATED CURRENT	1.5A
VOLTAGE	30V
INSULATION RESISTANCE	100 MOhms MIN.
CONTACT RESISTANCE	10 mOhms MAX.
WATER PROOF	IP67
ENVIRONMENT	
OPERATION TEMPERATURE	-40°C TO +85°C
ASSEMBLY	
PANEL THICKNESS	1.5mm (min) & 2.0mm (max)
MAX WIRE AWG	24AWG

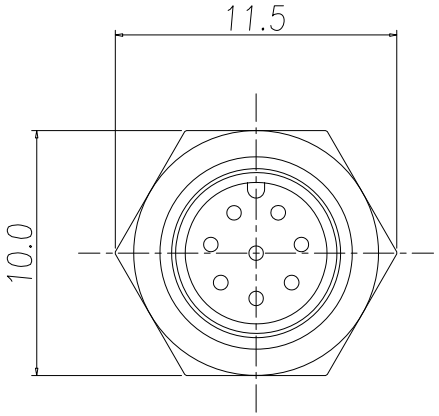

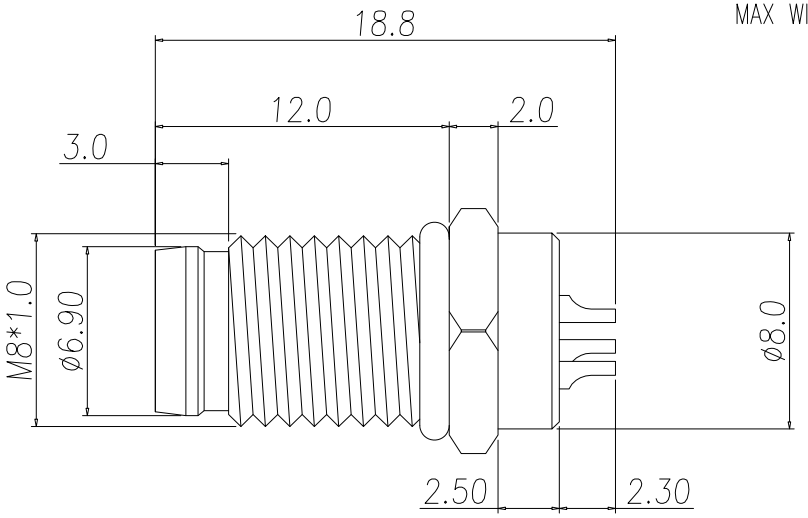

RoHS COMPLIANT

UNITS = mm

DO NOT SCALE FROM DRAWING

THESE DRAWINGS AND SPECIFICATIONS ARE THE PROPERTY OF NorComp AND SHALL NOT BE REPRODUCED, COPIED OR USED AS THE BASIS FOR THE MANUFACTURE OR SALE OF APPARATUS WITHOUT WRITTEN PERMISSION.

DRAWN: J. KADEL	NorComp	SCALE: NTS	SHEET 1 OF 1	REV 2
DATE: 04/07/2021		DWG NO. 855-008-103R004	