STK600-RCuC3A100-28

component placement prepared for uc3B1 and uc3A1

USB VCON and ID selected to PA26/27 (usart3 and TC ch 0)
alt was: PA03/04 (adc and gclk)
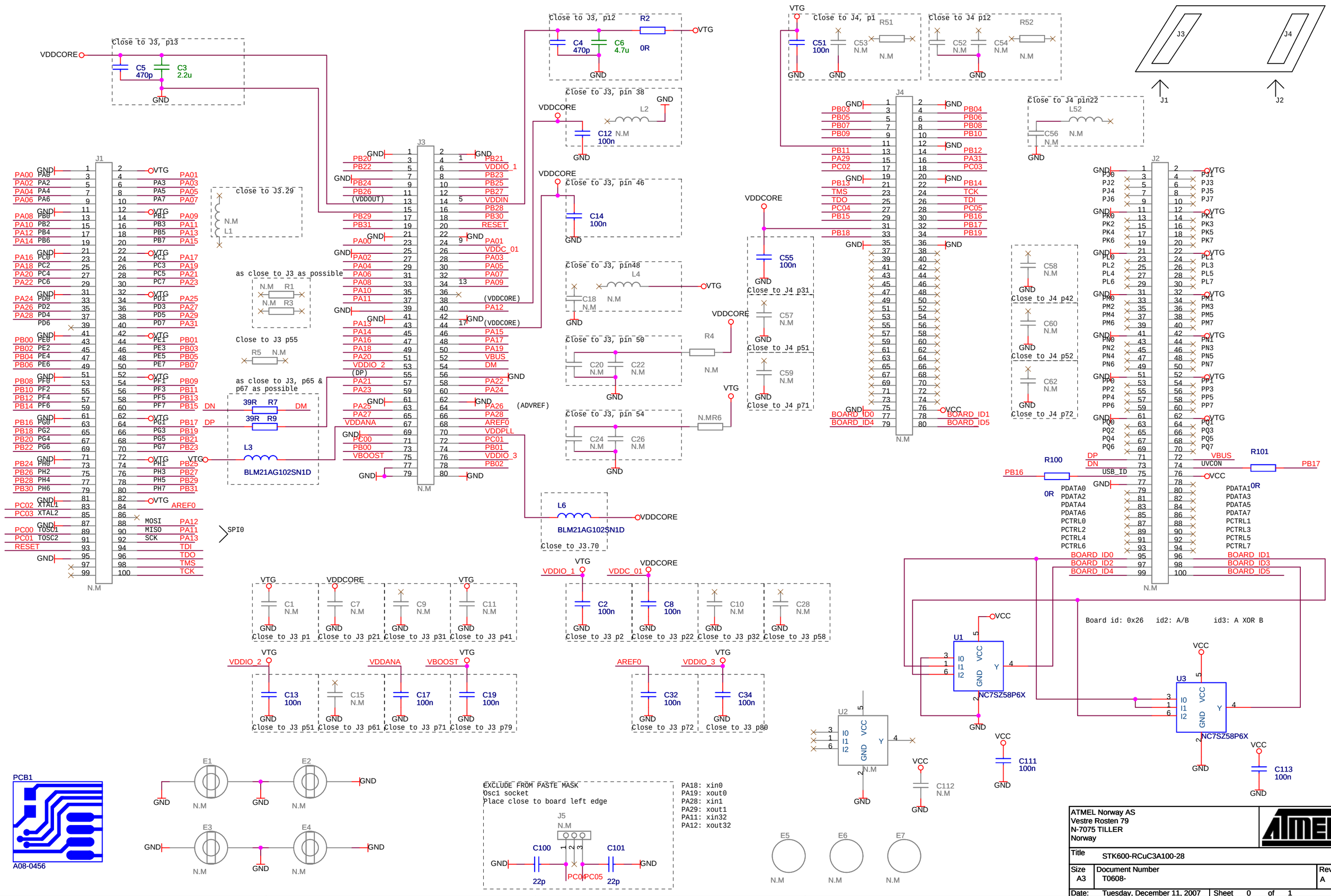
J3 and J4 mates up to the socket card, while J1 and J2 goes down to the mother board. J1 is physical placed below J3, and J2 below J4.