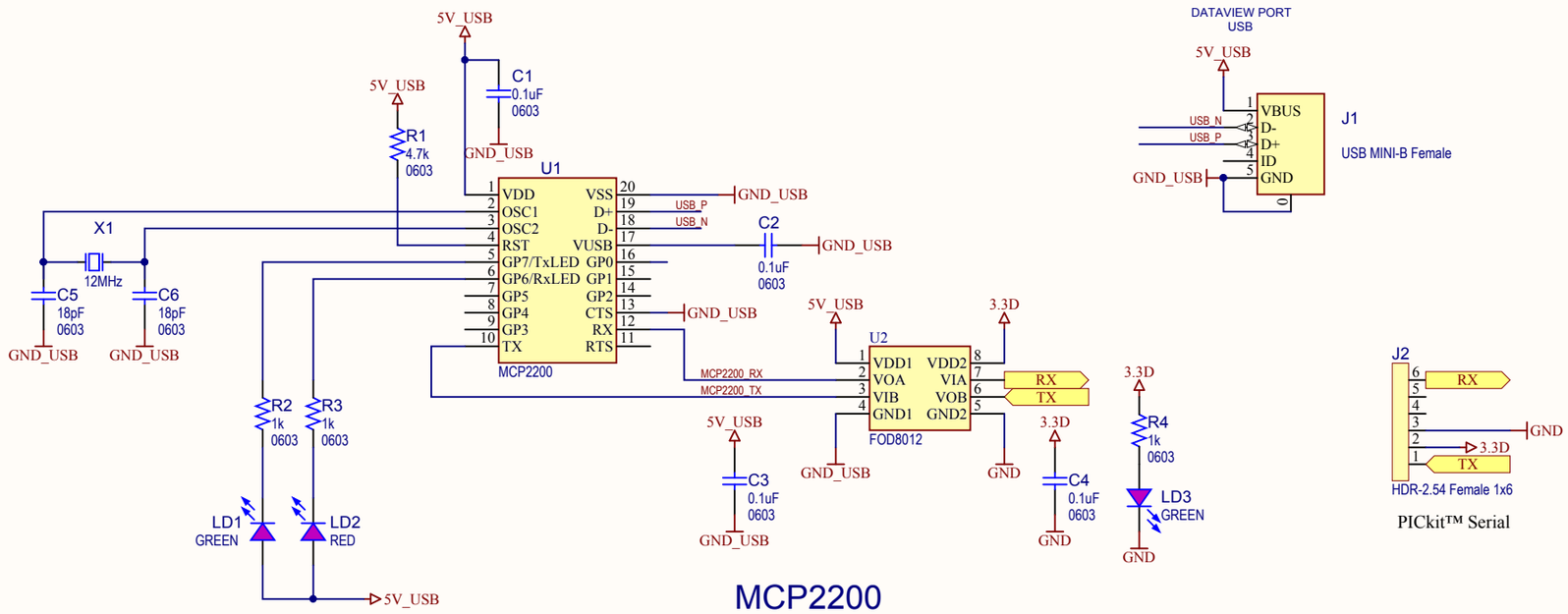

MCP2200

M1 Standoff LED T1-3/4

M2 Standoff LED T1-3/4

M3 Standoff LED T1-3/4

Enclosure1

PXA-201005S-MIC12040-R2

CBL1

USB-A Male to Mini USB-B Male

LED Standoffs to be placed under LD1, LD2, LD3

Drawn By: Bogdan Popescu	MICROCHIP
Engineer: Bogdan Bolocan	
PartNumber: ADM00276	Project Title: *MCP2200 Isolation Board*
Sheet Title: MCP2200	Designed with Altium.com
Size: B / Sch #:03-10365 / Revision:4	Date: 2/3/2015 2:53:52 PM / Sheet 1 of 1
File: MCP2200.SchDoc	