THIS DRAWING IS UNPUBLISHED | RELEASED FOR PUBLICATION 2014
© COPYRIGHT 2014 BY TE CONNECTIVITY ALL RIGHTS RESERVED.

LOC	DIST

REVISIONS

P	LTR	DESCRIPTION	DATE	DWN	APVD
	A	NEW RELEASE PER ECO-14-013992	06OCT2014	JA	DM
	A1	REVISED PER PCN E-20-000705	27JAN2020	PK	DM

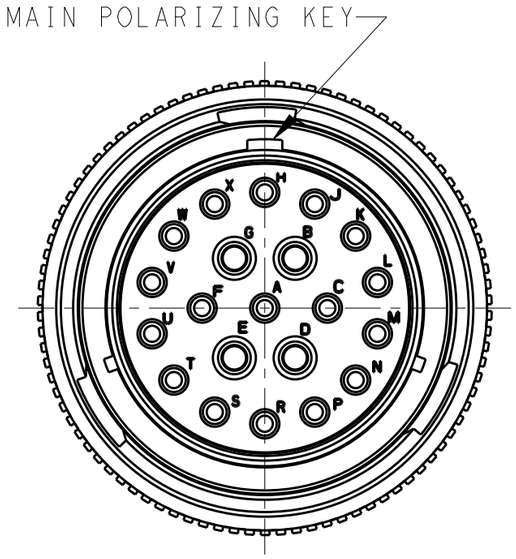

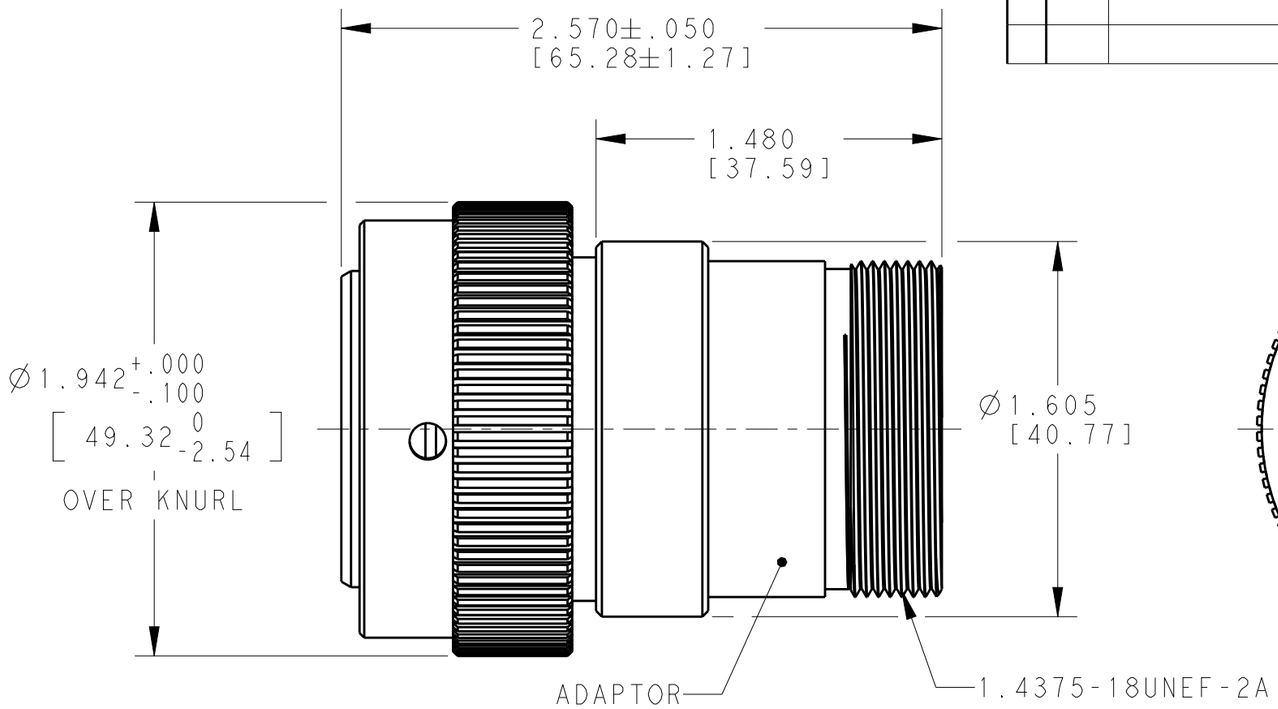

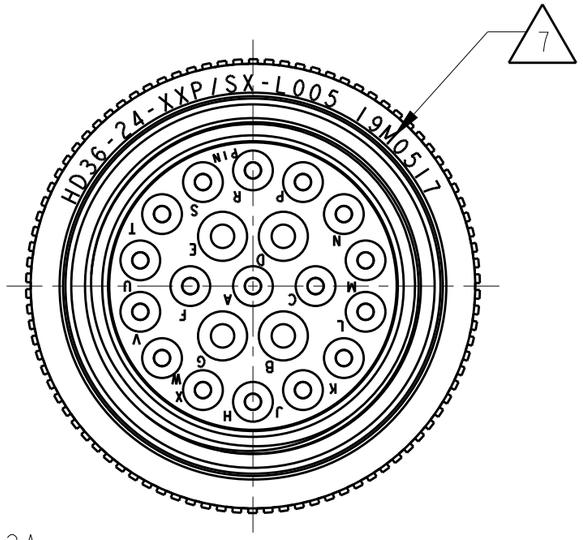

7 DATE CODE: IDENTIFIES THE YEAR,MONTH,DAY AND HOUR OF ASSEMBLY.
YEAR: FIRST AND SECOND DIGITS. (14=2014)
MONTH: THIRD DIGIT,EXCLUDING I.A=JAN.,B=FEB.,C=MARCH...(K=OCT.)
DAY: FOURTH AND FIFTH DIGITS (14=14th DAY)
HOUR: SIXTH AND SEVENTH DIGITS (11=11AM)

6 MATERIAL: SHELL, COUPLING RING AND ADAPTOR: ALUMINUM ALLOY 6061-T6, SEAL: SILICONE MQ,
RETAINING RING : PA66 GF10

5. FOR ARRANGEMENT OF CONTACT LOCATION SEE ENVELOPE DWG 0425-014-2400.

4. FOR CONNECTOR PERFORMANCE AND APPLICATION INFORMATION,
SEE DRAWING NUMBER 0425-016-0000.

3. THIS CONNECTOR MATES WITH PART NO.
HD34-24-XXS/PX-XXXX.
XX= NUMBER OF CAVITIES, X= TYPE OF SEAL,
XXXX= ALL MODIFICATION.

2. 21 PIN ARRANGEMENT SHOWN FOR REFERENCE ONLY.

1. CONSULT FACTORY FOR ELECTRICAL AND
MATERIAL SPECIFICATIONS.

NOTES:

THIS DRAWING IS A CONTROLLED DOCUMENT.

DIMENSIONS: INCHES[mm]

TOLERANCES UNLESS OTHERWISE SPECIFIED:
0 PLC ±
1 PLC ±
2 PLC ±
3 PLC ±.010[.254]
4 PLC ±
ANGLES ±0°30'0"

MATERIAL 6

FINISH N/A

DWN 06OCT2014 JAIME C. APOSTOL
CHK 06OCT2014 ILINA GRANTCHAROVA
APVD 06OCT2014 DAVID MEYER
PRODUCT SPEC 108-151014
APPLICATION SPEC 114-151014
WEIGHT 89g

Customer Drawing

TE Connectivity

NAME PLUG CONNECTOR SIZE 24
BAYONET COUPLING -L005 MOD
HD SERIES

SIZE	CAGE CODE	DRAWING NO	RESTRICTED TO
A3	4AFU8	C-HD36-24-XXP/SX-L005	-

SCALE NONE | SHEET 1 OF 1 | REV A1

1470-19 (3/11)