THIS DRAWING IS UNPUBLISHED. RELEASED FOR PUBLICATION 20
© COPYRIGHT 20 BY - ALL RIGHTS RESERVED.

T.E. PROPRIETARY AND CONFIDENTIAL
This drawing contains proprietary information that shall not be disclosed, duplicated nor used in whole or in part for any purpose other than to evaluate this drawing.

LOC	DIST
-	-

REVISIONS

P	LTR	DESCRIPTION	DATE	DWN	APVD
	A	REVISED PER E.O. C8206	110510	RB	-
	B	UPDATED PER ECO-14-008850	140506	CB	EA
	C	UPDATED PER ECN-24-255382	240311	SA	DM

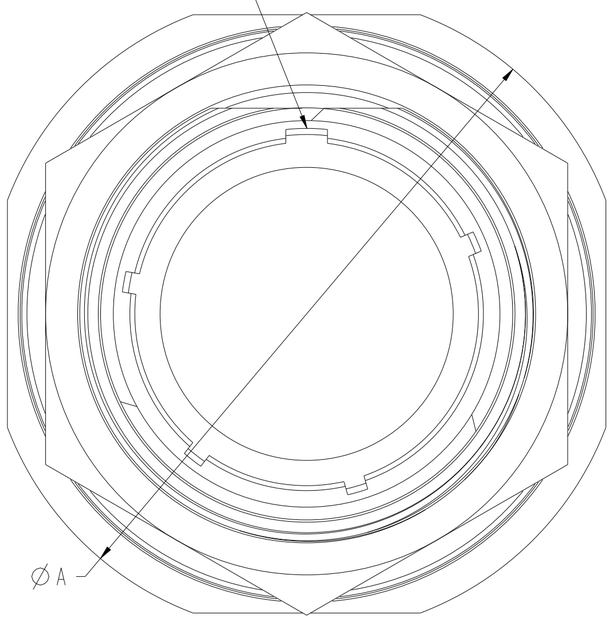

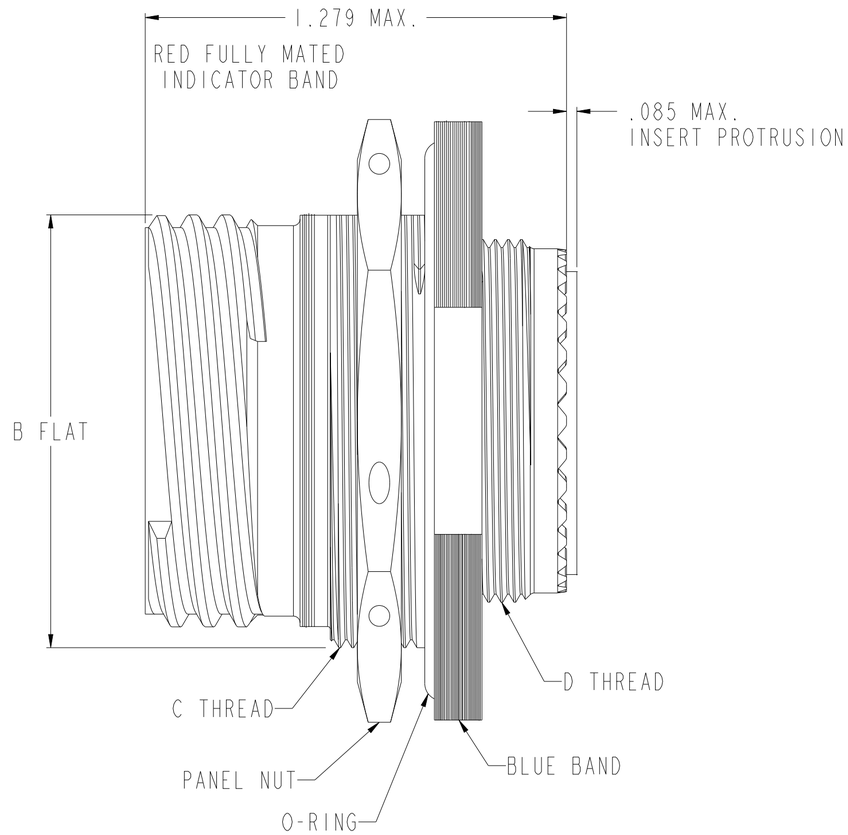

EXAMPLE OF PART NUMBER

DTS 24 W 19 - xx P/S x

- KEYING POSITION
  - N = NORMAL, A, B, C, D & E
- CONTACT STYLE
  - P = PIN, S = SOCKET
- INSERT ARRANGEMENT
- SHELL SIZE
- CLASS F = NICKEL
  - G = NICKEL SPACE GRADE
  - T = TEFLON NICKEL (B)
  - W = OLIVE DRAB CADMIUM
  - Z = ZINC NICKEL
- SHELL STYLE
  - 24 = RECEPTACLE JAM NUT MOUNTING
- CONNECTOR SERIES
  - DEUTSCH MIL-DTL-38999 SERIES III

PART NUMBER	SIZE	∅A±.011	B FLAT +.004 -.006	C THREAD	D THREAD
DTS24x09-xxP/Sx	09	1.189	.651	M17X1.0-6g 0.100R	M12X1.0-6g 0.100R
DTS24x11-xxP/Sx	11	1.374	.751	M20X1.0-6g 0.100R	M15X1.0-6g 0.100R
DTS24x13-xxP/Sx	13	1.500	.938	M25X1.0-6g 0.100R	M18X1.0-6g 0.100R
DTS24x15-xxP/Sx	15	1.626	1.062	M28X1.0-6g 0.100R	M22X1.0-6g 0.100R
DTS24x17-xxP/Sx	17	1.752	1.187	M32X1.0-6g 0.100R	M25X1.0-6g 0.100R
DTS24x19-xxP/Sx	19	1.937	1.312	M35X1.0-6g 0.100R	M28X1.0-6g 0.100R
DTS24x21-xxP/Sx	21	2.063	1.437	M38X1.0-6g 0.100R	M31X1.0-6g 0.100R
DTS24x23-xxP/Sx	23	2.189	1.562	M41X1.0-6g 0.100R	M34X1.0-6g 0.100R
DTS24x25-xxP/Sx	25	2.311	1.687	M44X1.0-6g 0.100R	M37X1.0-6g 0.100R

6. FOR AVAILABILITY CONSULT FACTORY.

5. MODIFIED MAJOR DIAMETER: 31.95 - 31.80 MM SIZE 17 C THREAD.

4. FOR APPLICABLE KEYING DIAGRAM AND PANEL CUTOUT DIMENSIONS, SEE MIL-DTL-38999. FOR AVAILABLE INSERT ARRANGEMENTS, SELL MIL-STD-1560.

3. GENERAL SPECIFICATIONS: THIS CONNECTOR IS INTERMATEABLE WITH MIL-DTL-38999 SERIES III, AND IS DESIGNED USING SIMILAR MATERIALS AND PROCESSES AS OUR QUALIFIED 38999 PRODUCTS. (C)

2. MATERIAL / FINISH: SHELL AND PANEL NUT - ALUMINUM ALLOY/ PER PART NUMBER EXAMPLE.
   RESILIENT INSERTS AND O-RING - SILICONE ELASTOMER
   PLASTIC INSERTS - THERMOPLASTIC.
   CONTACTS - COPPER ALLOY / GOLD PLATED.

1. ALL DIMENSIONS ARE IN INCHES UNLESS OTHERWISE SPECIFIED. THREAD CALLOUTS ARE METRIC.

THIS DRAWING IS A CONTROLLED DOCUMENT.

DIMENSIONS: INCH

TOLERANCES UNLESS OTHERWISE SPECIFIED:
0 PLC ±-
1 PLC ±0.1
2 PLC ±0.01
3 PLC ±0.001
4 PLC ±0.0001
ANGLES ±-

MATERIAL TBD
FINISH -

DWN D. WHITACRE 030612
CHK R.B. 110510
APVD ALEX RENGIFO 110511
PRODUCT SPEC -
APPLICATION SPEC -
WEIGHT -

TE Connectivity

NAME DTS JAM NUT RECEPTACLE ENVELOPE -

SIZE	CAGE CODE	DRAWING NO	RESTRICTED TO
A2	-	(C)-DTS24xxx-xxP/Sx	-

Customer Drawing SCALE 3.000 SHEET 1 OF 1 REV C

1471-9 (3/11)