THIS DRAWING IS UNPUBLISHED. RELEASED FOR PUBLICATION 20
© COPYRIGHT 20 BY - ALL RIGHTS RESERVED.

LOC	DIST
-	-

REVISIONS

P	LTR	DESCRIPTION	DATE	DWN	APVD
	1	PROPOSED	10FEB2012	DB	KT

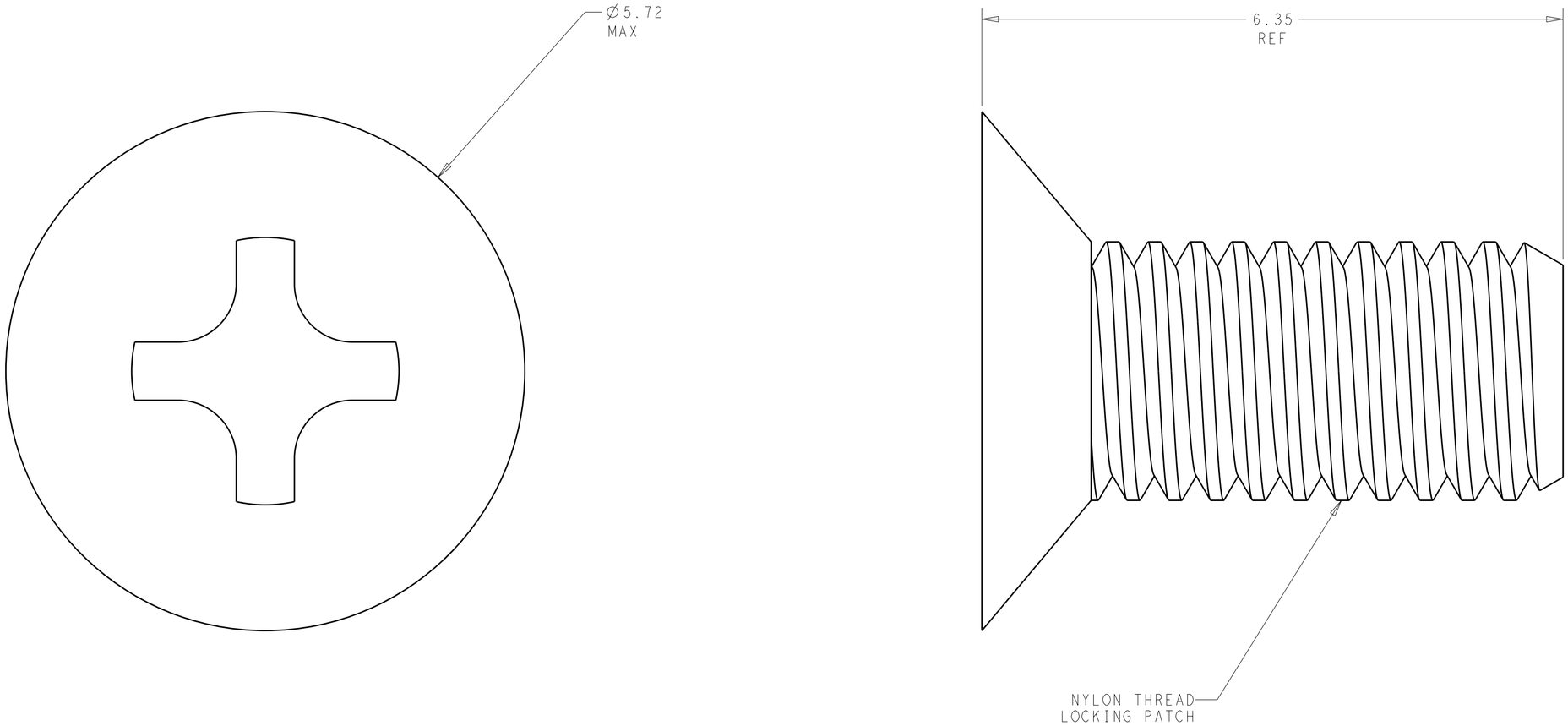

PART NUMBER
208021-1

THIS DRAWING IS A CONTROLLED DOCUMENT.

DIMENSIONS: mm

TOLERANCES UNLESS OTHERWISE SPECIFIED:

0 PLC	±-
1 PLC	±0.13
2 PLC	±0.05
3 PLC	±-
4 PLC	±-
ANGLES	±2°

MATERIAL: STAINLESS STEEL
FINISH: PASSIVATED

DWN: D. BELACK 10FEB2012
CHK: K. THACKSTON -
APVD: K. THACKSTON -
PRODUCT SPEC: -
APPLICATION SPEC: -
WEIGHT: -

TE Connectivity

NAME: ARINC KEYING SCREW
-
-

SIZE	CAGE CODE	DRAWING NO	RESTRICTED TO
A2	00779	C-208021	-

CUSTOMER DRAWING | SCALE 25:1 | SHEET 1 OF 1 | REV 1

1471-9 (3/11)

Pro/ENGINEER DRAWING