© 2021 TE Connectivity. All Rights Reserved.

REVISIONS					
P	LTR	DESCRIPTION	DATE	DWN	APVD

1. MATERIAL:
COPPER ALLOY

2. FINISH:
GOLD OVER NICKEL

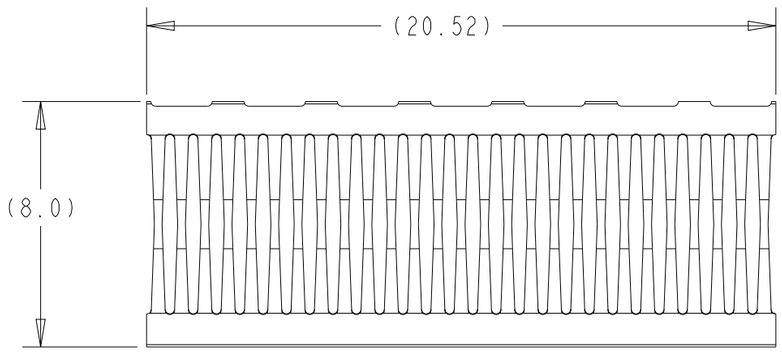

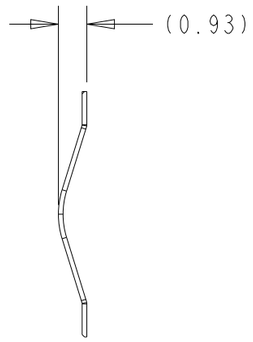

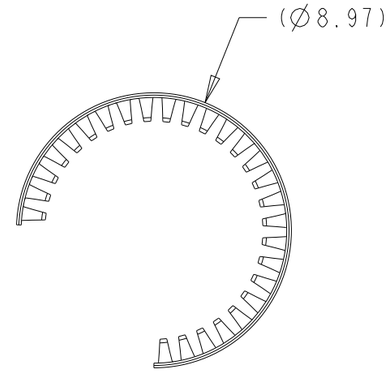

AS FORMED

1650016-1

TE PART NUMBER

THIS DRAWING IS A CONTROLLED DOCUMENT.

DIMENSIONS: mm

TOLERANCES UNLESS OTHERWISE SPECIFIED:

0 PLC	±-
1 PLC	±0.3
2 PLC	±0.2
3 PLC	±0.1
4 PLC	±-
ANGLES	±-

MATERIAL: - (1) -

FINISH: - (2) -

DWN ANDY LI 19NOV2021

CHK

APVD SEAN HAN 19NOV2021

PRODUCT SPEC 108-160327

APPLICATION SPEC 114-160141

WEIGHT -

TE Connectivity

NAME CONTACT BAND SIZE 4 PIN -

SIZE	CAGE CODE	DRAWING NO	RESTRICTED TO
A3	00779	C-1650016	-

CUSTOMER DRAWING

SCALE 5:1 | SHEET 1 OF 1 | REV 1

1470-19 (3/13)