SYMBOL DEFINITION		
A DIMENSION WITHOUT AN INSPECTION REPORT SYMBOL ( ) DOES NOT REQUIRE INSPECTION. IT MAY BE CONTROLLED ON THE INDIVIDUAL COMPONENT DRAWING.	TOTAL NO OF INSPECTIONS REQUIRED	15
	LAST NO. USED	10

MISSING SYMBOLS
NO MISSING SYMBOL NUMBER

DWG STATUS					ZONE	REVISION HISTORY	AUTH	DR	APVD 1	APVD 2
DATE	STG	REV	N/P	CHG						
29SE03	R	01	-	-	-	TAXI WAS 15438755	---	POT	DWS	ASG
13NO13	R	02	AA	-	-	ADDED P/N 33521582, REVISED CHART AND ADDED INSPECTION REPORT SYMBOLS	424017	POT	DWS	ASG
08OC20	R	03	-	-	-	UPDATED TOLERANCE DIM 3	445473	POT	GFM	JAM

LEADED DIRECTION
(RIGTH)

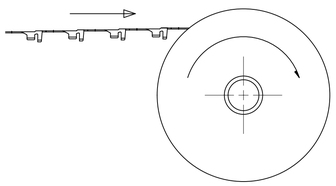

DO NOT SCALE

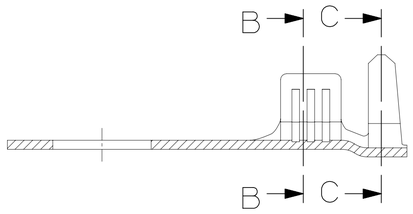

SECTION A - A

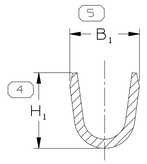

SECTION B - B

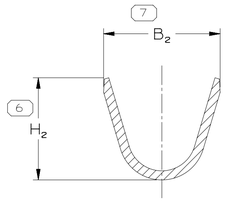

SECTION C - C

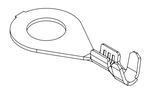

SCALE 2:1

LEADED DIRECTION
(LEFT)

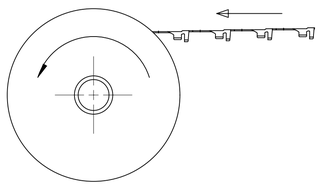

DO NOT SCALE

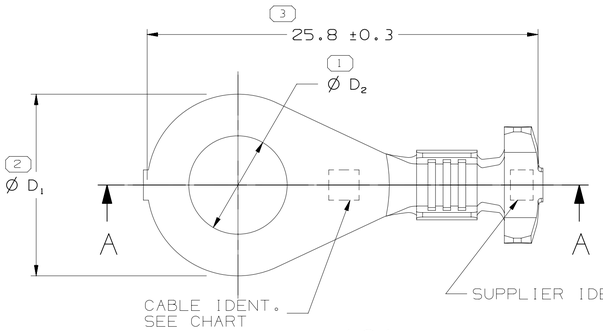

TYPE 101

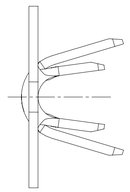

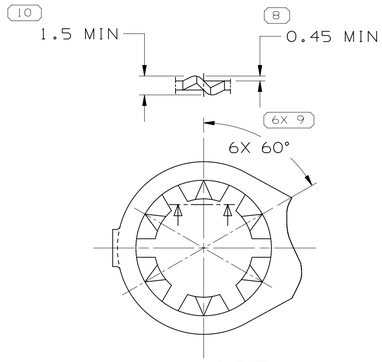

TYPE 102
SAME AS TYPE 101
EXCEPT AS SHOWN

PART NO	EPEC NO. (REFERENCE)	REV	N/P	MAT'L SIZE	MAT'L SPEC	SIZE(MM²)	ID	DIA	POS PLATING	TYPE	D_1±0.15	D_2±0.15	B_1±0.3	B_2±0.3	H_1±0.3	H_2±0.3	LEADED DIRECTION
						CABLE					DIMENSIONS						
-	EPC0101154/84	-	-	0.6 X 18.4	M1428B24 BRONZE CDA 510	>2.5-4.0	4	4.5	-	102	13	8.4	4.6	7.7	5	6.75	LEFT
-	EPC0101154/83	-	-								12	6.5					
-	EPC0101154/82	-	-						TEPC10003 MATTE TIN	101	12	8.4					
-	EPC0101154/81	-	-									6.5					
-	EPC0101154/44	-	-		M1403B24 BRASS CDA 260				TEPC10003 MATTE TIN	102	13	8.4					
-	EPC0101154/43	-	-								12	6.5					
-	EPC0101154/42	-	-							101	12	8.4					
15327356	EPC0101154/41	11	AD									6.5					
-	EPC0101154/34	-	-						-			8.4					
12157741	EPC0101154/33	11	AD									6.5					
-	EPC0101154/76	-	-	0.6 X 15.9	M1428796 BRONZE CDA 510	>1.0-2.5	2.5	3.7	TEPC10003 MATTE TIN	102	13	8.4	4	6.2	4.2	5.8	LEFT
-	EPC0101154/75	-	-								12	6.5					
15327359	EPC0101154/74	11	AC							101	12	8.4					
15364303	EPC0101154/73	11	AC									6.5					
-	EPC0101154/20	-	-		M1403796 BRASS CDA 260				-	102	13	8.4					
-	EPC0101154/19	-	-								12	6.5					
12157751	EPC0101154/26	11	AC						TEPC10003 MATTE TIN	101	12	8.4					
12157749	EPC0101154/25	11	AC									6.5					
12157745	EPC0101154/18	11	AC						-			8.4					
12157747	EPC0101154/17	11	AC									6.5					
-	EPC0101154/52	-	-	0.6 X 14.4	M1428795 BRONZE CDA 510	0.5-1.0	1	2.7	-	102	13	8.4	3	4.9	3.1	4.5	LEFT
-	EPC0101154/51	-	-								12	6.5					
15327358	EPC0101154/58	11	AC						TEPC10003 MATTE TIN	101	12	8.4					
15327357	EPC0101154/57	11	AC									6.5					
-	EPC0101154/4	-	-		M1403795 BRASS CDA 260				-	102	13	8.4					
-	EPC0101154/3	-	-								12	6.5					
12157750	EPC0101154/10	11	AC						TEPC10003 MATTE TIN	101	12	8.4					
12157748	EPC0101154/9	11	AC									6.5					
12157744	EPC0101154/2	11	AC						-			8.4					
12157746	EPC0101154/1	11	AC									6.5					
33121582	-	01	-														RIGTH

3 PROCESS SENSITIVE DIMENSION

DIMENSIONS ENCLOSED IN ( ) INDICATE REFERENCE DIMENSIONS AND NO TOLERANCE LIMITS ARE ESTABLISHED

DIMENSIONAL RANGE (MM)		CHART D
FROM	0	>12
TO	12	
TOLERANCE UNLESS OTHERWISE SPECIFIED		
±0.1		±0.2
ANGULAR TOLERANCE ±2°		

A ⧵ LINE DRAWN THROUGH A PART NUMBER INDICATES THAT PHYSICAL PARTS ARE NOT AVAILABLE FOR ORDERING.

PART NUMBERS THAT DO NOT HAVE A LINE PRESENT INDICATE THAT PHYSICAL PARTS ARE AVAILABLE FOR ORDERING.

CONTACT APTIV SALES TO ASSURE AVAILABILITY OF PARTS.

DWG TYPE: PART DRAWING

STYLE

VOLUME (CM³)

DISTR CODE: D

UNLESS OTHERWISE SPECIFIED
THIS DOCUMENT IS IN ACCORDANCE WITH ASME Y14.5M-1994 AS AMENDED BY THE GM GLOBAL DIMENSIONING AND TOLERANCING ADDENDUM-2001. SEPARATE PATTERNS OF FEATURES MAY BE GAGED SEPARATELY REGARDLESS OF DATUM REFERENCES.

ALL DIMENSIONS ARE IN MILLIMETERS

REFERENCE

FIRST ANGLE PROJECTION

DO NOT SCALE
USE MATH DATA

CAD NX

•APTIV•

CONNECTION SYSTEMS
Jambeiro, Brazil

COPYRIGHT 2002 APTIV. ALL RIGHTS RESERVED.

THIS DRAWING IS THE PROPERTY OF APTIV AND CONTAINS APTIV CONFIDENTIAL INFORMATION. THE REPRODUCTION, DISTRIBUTION AND UTILIZATION OF THIS DOCUMENT OR ITS RELATED CAD MATH DATA, AS WELL AS COMMUNICATION OF ANY CONTENT TO OTHERS, WITHOUT EXPRESS AUTHORIZATION, IS PROHIBITED.

		DATE
DR		
APVD1	PAULO TUDESCHINI	17SE02
APVD2	DENIS SANTOS	17SE02
APVD3	ANTONIO GROPPO	17SE02
APVD4		
APVD5		

SUBSTANCES OF CONCERN AND RECYCLED CONTENT PER APTIV 1094900I

MATERIAL
SEE CHART

DRAWING NAME
TAXI TERM RING

DRAWING NUMBER
15446847

SIZE	SCALE	FRAME NO	SHEET NO	STG	REV	N/P
A1	5:1	1 OF 1	1 OF 1	R	03	-

User: k212ed
Form: 15446847-CUS01-501/03 Date: 27-Nov-20 Time: 08:43:47
k212ed,11127202020,08:42,65pass.pln