COVER 10 WAY	
APTIV P/N	CODING
13543546	CODING - A

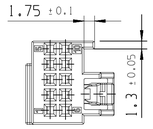

13567786	CODING - B

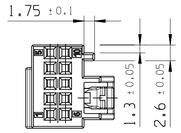

13567787	CODING - C

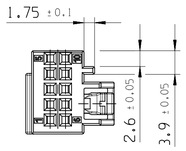

13567788	CODING - D

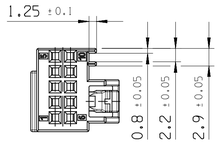

13567789	CODING - E

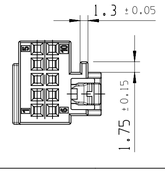

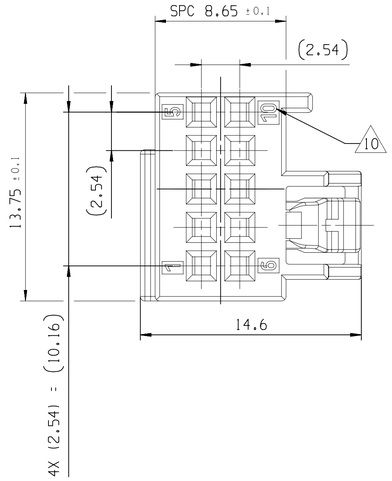

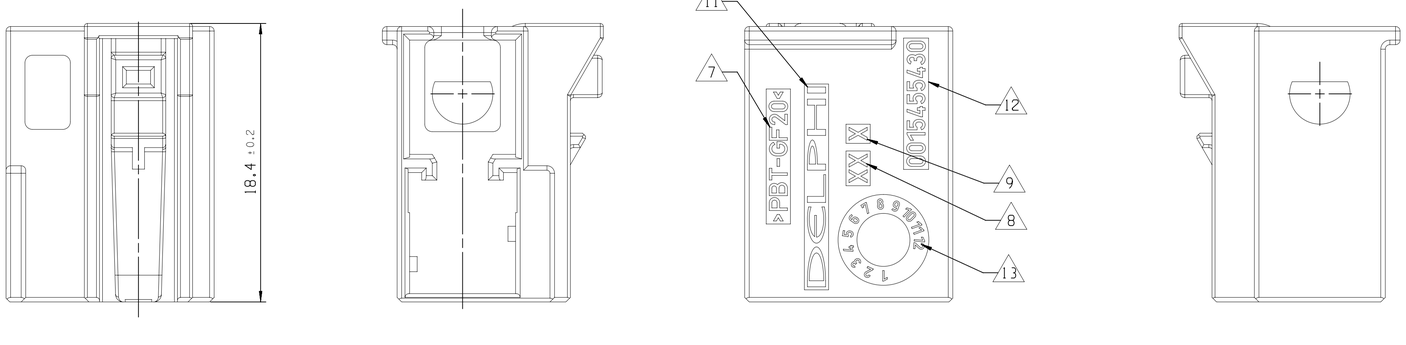

NOTE	SPECIFICATIONS
1	FEMALE CONNECTOR ACCORDING TO APTIV SPECIFICATION: CAQE TBD
2	FEMALE CONNECTOR ACCORDING TO: -TEMPERATURE CLASS TX -ENGINE VIBRATOR CLASS VX -SEALING CLASS EX
3	USER'S MANUAL: 13590051-CUS76-S01
4	DELIVERY CONNECTOR WEIGHT : SEE TABLE
5	NO WAFER HINGE OR WAFER HINGE BROKEN ALLOWED
6	VISUAL DEFECTS ON NO FUNCTIONNAL AREAS ALLOWED
7	MATERIAL NAME
8	TOOL CAVITY NUMBER
9	INDEX REPLCEMENT INSERT
10	PART CAVITY NUMBER
11	SUPPLIER LOGO
12	REPLACEMRNT INSERT BLANK
13	DATE INSERT

ASSOCIATED PARTS (FOR INFORMATION)	
DESCRIPTION	APTIV P/N
MATING PART	13590063
INSERT 10 WAY FOR MTS/MQS 0.63	13543543

DESCRIPTION	CODE	APTIV PART NUMBER	WEIGHT (kg)	MATERIAL	COLOR
COVER 10 WAY	E	13567789	0.0013	PBT GF20	GREEN
	D	13567788	0.0013	PBT GF20	VIOLET
	C	13567787	0.0013	PBT GF20	BLUE
	B	13567786	0.0013	PBT GF20	NATURE
	A	13543546	0.0013	PBT GF20	BLACK

A ——— LINE DRAWN THROUGH A PART NUMBER INDICATES THAT PHYSICAL PARTS ARE NOT AVAILABLE FOR ORDERING.

PART NUMBERS THAT DO NOT HAVE A LINE PRESENT INDICATE THAT PHYSICAL PARTS ARE AVAILABLE FOR ORDERING.

CONTACT APTIV SALES TO ASSURE AVAILABILITY OF PARTS.

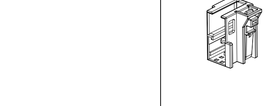

SHARP CORNER TOLERANCE

DIM TO CHECK / ( ) DIM FOR HELP / THEORETIC DIM	DIMENSIONAL RANGE (MM) FROM TO	> 0 20	> 20 30	> 30 70	> 70 100	>100 150	>150 200	>200 250	>250 300	>300 400
	TOLERANCE UNLESS OTHERWISE SPECIFIED	±0.15	±0.2	±0.3	±0.4	±0.5	±0.6	±0.8	±1	±1.2
	ANGULAR TOLERANCE ±2°									

DWG STATUS DATE	STG	REV	N/P	CHG	ZONE	REVISION HISTORY	AUTH	DR	APVD 1	APVD 2
24N021	R	01				INITIAL RELEASE		P.BAL	M.LAG	M.LAG

3D VIEW

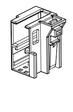

SCALE 1:1

DWG TYP: CUSTOMER PART DRAWING

WEIGHT (GR): SEE CHART

VOLUME (CM³): ---

ROUTING

DISTR CODE: D

UNLESS OTHERWISE SPECIFIED

GENERAL TOLERANCES ACCORDING TO:

SEE CHART

GD&T ACCORDING TO:

ISO 1101

REFERENCE

FIRST ANGLE PROJECTION

DO NOT SCALE

USE MATH DATA

CAD NX

•APTIV•

CONNECTION SYSTEMS

Chennai, India

COPYRIGHT 2021 APTIV. ALL RIGHTS RESERVED.

THIS DRAWING IS THE PROPERTY OF APTIV AND CONTAINS APTIV CONFIDENTIAL INFORMATION. THE REPRODUCTION, DISTRIBUTION AND UTILIZATION OF THIS DOCUMENT OR ITS RELATED CAD MATH DATA, AS WELL AS COMMUNICATION OF ANY CONTENT TO OTHERS, WITHOUT EXPRESS AUTHORIZATION, IS PROHIBITED.

		DATE
DR	P.BALAJI	24N021
APVD1	LAGUETTE MAURICE	24N021
APVD2	LAGUETTE MAURICE	24N021
APVD3		
APVD4		
APVD5		

SUBSTANCES OF CONCERN AND RECYCLED CONTENT PER APTIV 10949001

MATERIAL: SEE CHART

DRAWING NAME: COVER 10 WAY FOR MTS AND MQS 0.63

DRAWING NUMBER: 13543547

SIZE	SCALE	FRAME NO	SHEET NO	STG	REV	N/P
A1	5:1	1 OF 1	1 OF 1	R	01	

CONTROLLED DOCUMENTS ARE ONLY AVAILABLE ON THE SERVER

User: KZ597M Part: 13543547-CUS02-S01/01 Date: 25-Feb-22 Time: 11:25:17
KZ597M.02252022.06154.1256pass.cub