COVER AND LEVER 14 WAY	
APTIV P/N	CODING
15340830	CODING - A
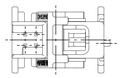	
15344733	CODING - B
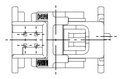	
15344736	CODING - C
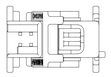	
15344739	CODING - D
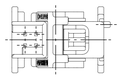	

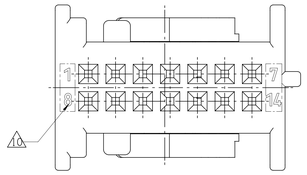

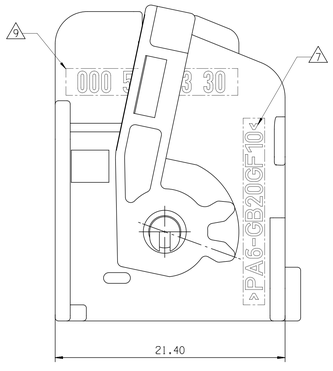

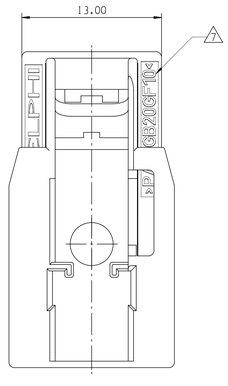

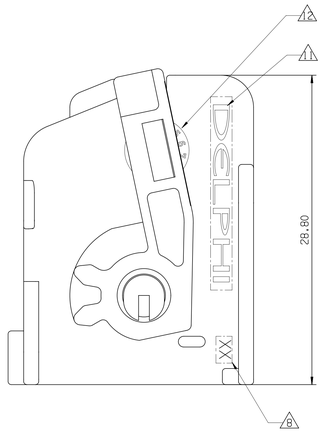

VARIANTE 1

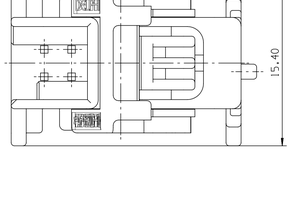

NOTE	SPECIFICATIONS
1	FEMALE CONNECTOR ACCORDING TO APTIV SPECIFICATION: CAGE TBD
2	FEMALE CONNECTOR ACCORDING TO: -TEMPERATURE CLASS T2 -ENGINE VIBRATOR CLASS V1 -SEALING CLASS E0
3	USER'S MANUAL: TBD
4	DELIVERY CONNECTOR WEIGHT : 27g
5	NO WAFER HINGE OR WAFER HINGE BROKEN ALLOWED
6	VISUAL DEFECTS ON NO FUNCTIONNAL AREAS ALLOWED
1	MATERIAL CODE
2	MOLD CAVITY NUMBER
3	PART REVISION NUMBER
4	WAY NUMBERS
5	SUPPLIER LOGO
6	DATE CLOCK

A LINE DRAWN THROUGH A PART NUMBER INDICATES THAT PHYSICAL PARTS ARE NOT AVAILABLE FOR ORDERING.

PART NUMBERS THAT DO NOT HAVE A LINE PRESENT INDICATE THAT PHYSICAL PARTS ARE AVAILABLE FOR ORDERING.

CONTACT APTIV SALES TO ASSURE AVAILABILITY OF PARTS.

SHARP CORNER TOLERANCE

MOUNTING OPENING

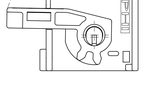

ASSOCIATED PARTS (FOR INFORMATION)	
DESCRIPTION	APTIV P/N
CONTACT SUPPORT 14-WAY FOR 0.64 MQS	10719999

COVER AND LEVER 14 WAY	D	15344739	COVER FOR INSERT 14 WAY	15344738	PA6 GB20GF10	VIOLET	1
			LEVER	10719322	PA6 GB20GF10	BLACK	2
	C	15344736	COVER FOR INSERT 14 WAY	15344735	PA6 GB20GF10	BLUE	1
			LEVER	10719322	PA6 GB20GF10	BLACK	2
	B	15344733	COVER FOR INSERT 14 WAY	15344732	PA6 GB20GF10	NATURAL	1
			LEVER	10719322	PA6 GB20GF10	BLACK	2
	A	15340830	COVER FOR INSERT 14 WAY	10720001	PA6 GB20GF10	BLACK	1
			LEVER	10719322	PA6 GB20GF10	BLACK	2
	CODE	APTIV NUMBER	DESCRIPTION	APTIV PART NUMBER	MATERIAL	COLOR	NO.

DIM TO CHECK	DIMENSIONAL RANGE (MM)									
	FROM	0	20	30	70	100	150	200	250	300
DIM FOR HELP	TO	20	30	70	100	150	200	250	300	400
	TOLERANCE UNLESS OTHERWISE SPECIFIED									
THEORETIC DIM	±0.15	±0.2	±0.3	±0.4	±0.5	±0.6	±0.8	±1	±1.2	
	ANGULAR TOLERANCE ±2°									

CHART E1

ZONE	REVISION HISTORY	AUTH	DR	APVD 1	APVD 2
	INITIAL RELEASE		P.BAL	M.LAG	M.LAG

DWG STATUS					
DATE	STG	REV	N/P	CHG	
16MR22	R	01			

3D VIEW

SCALE 1:1

DWG TYP
CUSTOMER PART DRAWING

WEIGHT (GR) (NET)
SEE TABLE

VOLUME (CM³)
***

ROUTING

DISTR CODE
D

UNLESS OTHERWISE SPECIFIED

GENERAL TOLERANCES ACCORDING TO:

SEE CHART

GD&T ACCORDING TO:

ISO 1101

REFERENCE

FIRST ANGLE PROJECTION

DO NOT SCALE

USE MATH DATA

•APTIV•

CONNECTION SYSTEMS

Chennai, India

COPYRIGHT 2022 APTIV. ALL RIGHTS RESERVED.

THIS DRAWING IS THE PROPERTY OF APTIV AND CONTAINS APTIV CONFIDENTIAL INFORMATION. THE REPRODUCTION, DISTRIBUTION AND UTILIZATION OF THIS DOCUMENT OR ITS RELATED CAD MATH DATA, AS WELL AS COMMUNICATION OF ANY CONTENT TO OTHERS, WITHOUT EXPRESS AUTHORIZATION, IS PROHIBITED.

		DATE
DR	P.BALAJI	16MR22
APVD1	LAGUETTE MAURICE	16MR22
APVD2	LAGUETTE MAURICE	16MR22
APVD3		
APVD4		
APVD5		

SUBSTANCES OF CONCERN AND RECYCLED CONTENT PER APTIV 1094901

MATERIAL
SEE TABLE

DRAWING NAME
COVER WITH LOCKING LATCH 14 WAY

DRAWING NUMBER
15345518

SIZE	SCALE	FRAME NO	SHEET NO	STG	REV	N/P
A0	5:1	1 OF 1	1 OF 1	R	01	

User: KOCHA
KOCHA0008-CD3-0000 Date: 28-Mar-22 Time: 16:43:42