SYMBOL DEFINITION		
A DIMENSION WITHOUT AN INSPECTION REPORT SYMBOL ( ) DOES NOT REQUIRE INSPECTION. IT MAY BE CONTROLLED ON THE INDIVIDUAL COMPONENT DRAWING.	TOTAL NO OF INSPECTIONS REQUIRED	36
	LAST NO. USED	30

MISSING SYMBOLS
NO MISSING SYMBOL NUMBER

DWG STATUS					ZONE	REVISION HISTORY	AUTH	DR	APVD 1	APVD 2
DATE	STG	REV	N/P	CHG						
16AU17	U	01	-	-	-	INITIAL RELEASE	PD17-097	SHT	SJW	PJH
11JA18	R	02	-	-	-	1. CHANGED DESIGN OF 35082291 2. UPDATED APPLICABLE WIRE RANGE 3. ADDED DIMENSION (#16 TO #30)	PD18-003	YIK	SJW	PJH
25AP18	R	03	-	-	A8 A9	UPDATED APPLICABLE WIRE RANGE AND INSULATION OF CABLE	PD18-083	YIK	SJW	PJH

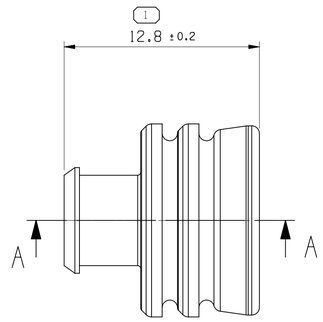

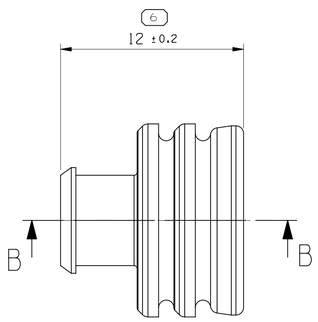

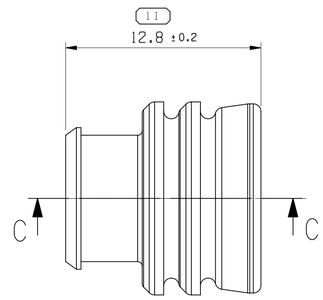

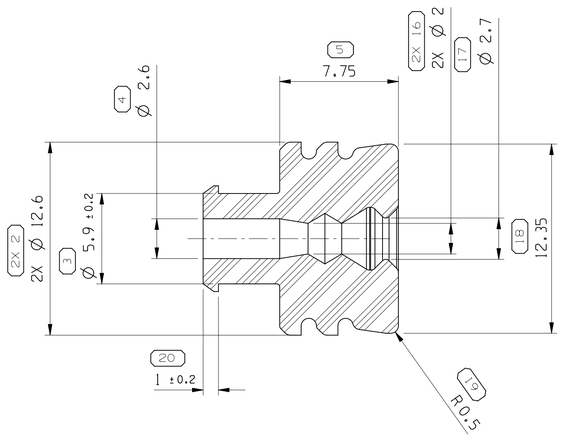

SECTION A - A
35082291

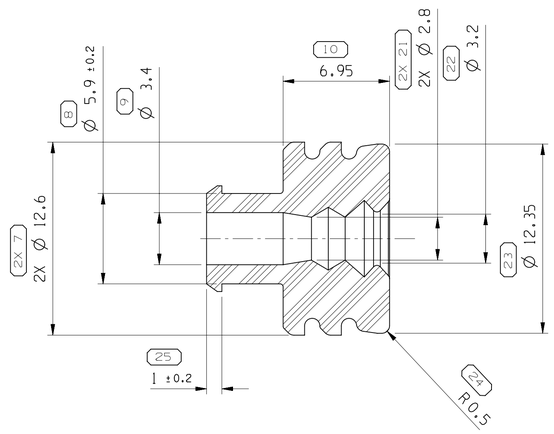

SECTION B - B
35082292

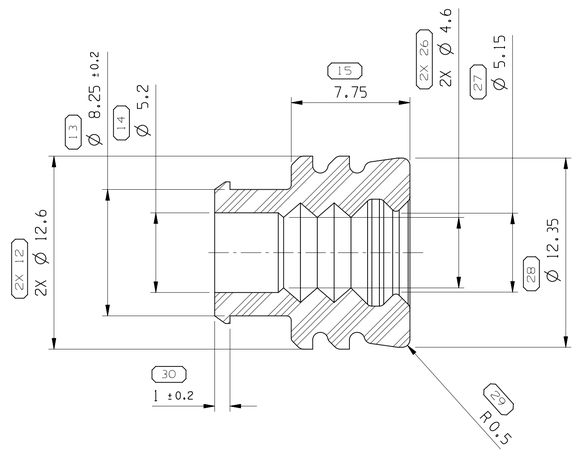

SECTION C - C
35082293

NOTE:

1. MATERIAL : SEE TABLE
2. GENERAL TOLERANCE : ±0.15 , 2°
3. SEALING AREA SURFACE MUST BE FREE OF CUTS,BUBBLES,BLOWHOLES,FURROWS AND INSERT MARKS.

			◯	◯	
35082291	LONG	3.0-4.0	3.4-4.0	LIGHT GRAY	SILICONE RUBBER
35082292	LONG	5.0-8.0	4.0-5.7	DARK GRAY	SILICONE RUBBER
35082293	LONG	9.0-10.0	5.9-6.6	BLACK	SILICONE RUBBER
PART NO.	TYPE	CABLE SECTION TYPE (SQMM)	INSULATION OF CABLE (Ø)	COLOR	MATERIAL

A ⧄ LINE DRAWN THROUGH A PART NUMBER INDICATES THAT PHYSICAL PARTS ARE NOT AVAILABLE FOR ORDERING.

PART NUMBERS THAT DO NOT HAVE A LINE PRESENT INDICATE THAT PHYSICAL PARTS ARE AVAILABLE FOR ORDERING.

CONTACT DELPHI SALES TO ASSURE AVAILABILITY OF PARTS.

DWG TYPE: PART DRAWING

STYLE

VOLUME (CM³)

DISTR CODE

UNLESS OTHERWISE SPECIFIED

THIS DOCUMENT IS IN ACCORDANCE WITH ASME Y14.5M-1994 AS AMENDED BY THE GM GLOBAL DIMENSIONING AND TOLERANCING ADDENDUM-2001. SEPARATE PATTERNS OF FEATURES MAY BE GAGED SEPARATELY REGARDLESS OF DATUM REFERENCES.

ALL DIMENSIONS ARE IN MILLIMETERS

REFERENCE

THIRD ANGLE PROJECTION

DO NOT SCALE

USE MATH DATA

CAD NX

DELPHI

DELPHI PACKARD ELECTRICAL/ELECTRONIC ARCHITECTURE
Chennai, India

COPYRIGHT 2017 DELPHI CORPORATION AND/OR ITS AFFILIATES.
ALL RIGHTS RESERVED.

THIS DRAWING IS THE PROPERTY OF DELPHI CORPORATION AND CONTAINS DELPHI CONFIDENTIAL INFORMATION. THE REPRODUCTION, DISTRIBUTION AND UTILIZATION OF THIS DOCUMENT OR ITS RELATED CAD MATH DATA, AS WELL AS COMMUNICATION OF ANY CONTENT TO OTHERS, WITHOUT EXPRESS AUTHORIZATION, IS PROHIBITED.

		DATE
DR	BALAKRISHNAN,VINO	16AU17
APVD1	SONG,HYUN-TAE	16AU17
APVD2	SEO, JU-WON	16AU17
APVD3	PARK,JOO-HYUN	16AU17
APVD4		
APVD5		

SUBSTANCES OF CONCERN AND RECYCLED CONTENT PER DELPHI I0949001

MATERIAL: SEE TABLE

DRAWING NAME: SINGLE WIRE SEAL FOR DCS1 9.5 TERMINAL

DRAWING NUMBER: 35082287

SIZE	SCALE	FRAME NO	SHEET NO	STG	REV	N/P
A1	5:1	1 OF 1	1 OF 1	R	03	-