SYMBOL DEFINITION		
A DIMENSION WITHOUT AN INSPECTION REPORT SYMBOL ( ) DOES NOT REQUIRE INSPECTION. IT MAY BE CONTROLLED ON THE INDIVIDUAL COMPONENT DRAWING.	TOTAL NO OF INSPECTIONS REQUIRED	12
	LAST NO. USED	12

MISSING SYMBOLS
NO MISSING SYMBOL NUMBER

DWG STATUS					ZONE	REVISION HISTORY	AUTH	DR	APVD 1	APVD 2
DATE	STG	REV	N/P	CHG						
250C17	R	01	-	-		INITIAL DRAWING RELEASED	439192	HWH	TY	WGJ
06MY22	R	02	-	-		ADD PN 35259734	448020	HC	AM	YLX

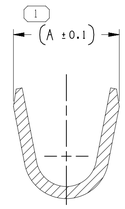

SECTION A - A

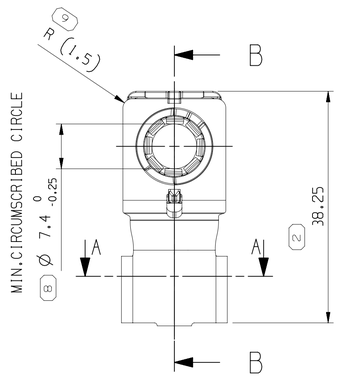

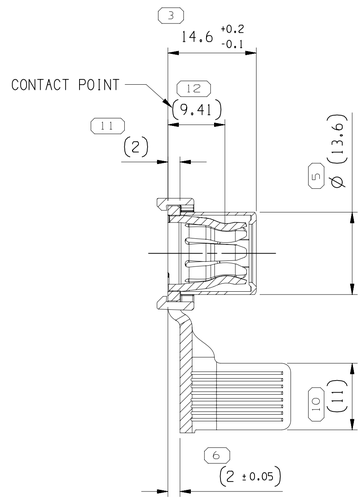

SECTION B - B

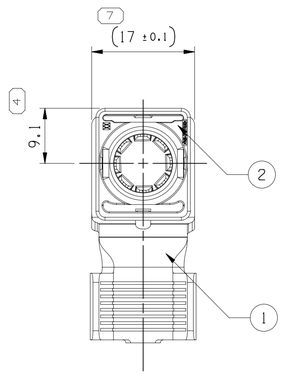

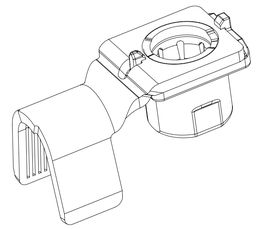

NOTES:

1. UNLESS OTHERWISE SPECIFIED AND/OR INDICATED:

   DIMENSIONS ARE TO FACE OF VIEW SHOWN AND AUTOMATICALLY ROUNDED BY COMPUTER FOR INSPECTION (SEE MATH MODEL FOR PRECISE DIMENSIONS). FOR ALL OTHER DIMENSIONS NOT SHOWN BUT REQUIRED FOR TOOL BUILD, SEE MATH MODEL FOR PRECISE TOOL PATH DATA.

2. PART HAS TO BE DELIVERED DEGREASED.

3. PART MUST BE WATERPROOF PACKING.

4. PART MUST BE FREE OF CRACKS.

5. THE MINIMUM FORCE REQUIRED TO REMOVE THE GAUGE PE389928 FROM PART 35150077 SHOULD BE 30N.

6. THE RAW MATERIAL OF THE PLASTIC COMPONENT MEET UL-VO.

POS	PART-NO.	REV	DESCRIPTION	QTY.	MATERIAL AND COLOR	SIMILAR TO RAL	DIM. A	WEIGHT(g)
A	35150077	01	FEMALE TERMINAL ASSY. 35 & 50 mm²	-	-	-	17.48	17.371
1	33355956	-	TERMINAL SPRING 90 DEGREE ASSY, 35 & 50mm²	1	COPPER ALLOY	-	-	-
2	35150098	-	TERMINAL CAP	1	POLYAMIDE BLEND NAT	-	-	-
B	35259734	01	FEMALE TERMINAL ASSY. 25 mm²	-	-	-	13.61	15.181
1	33383883	-	TERMINAL SPRING 90 DEGREE ASSY, 25mm²	1	COPPER ALLOY	-	-	-
2	35150098	-	TERMINAL CAP	1	POLYAMIDE BLEND NAT	-	-	-

2 PROCESS SENSITIVE DIMENSION

DIMENSIONS ENCLOSED IN ( ) INDICATE REFERENCE DIMENSIONS AND NO TOLERANCE LIMITS ARE ESTABLISHED

DIMENSIONAL RANGE (MM)		CHART D
FROM	0	>12
TO	12	
TOLERANCE UNLESS OTHERWISE SPECIFIED		
±0.1		±0.2
ANGULAR TOLERANCE ±2°		

A ——— LINE DRAWN THROUGH A PART NUMBER INDICATES THAT PHYSICAL PARTS ARE NOT AVAILABLE FOR ORDERING.

PART NUMBERS THAT DO NOT HAVE A LINE PRESENT INDICATE THAT PHYSICAL PARTS ARE AVAILABLE FOR ORDERING.

CONTACT APTIV SALES TO ASSURE AVAILABILITY OF PARTS.

DWG TYPE: CUSTOMER PART DRAWING

STYLE

VOLUME (CM³): SEE CHART

DISTR CODE: D

UNLESS OTHERWISE SPECIFIED

THIS DOCUMENT IS IN ACCORDANCE WITH ASME Y14.5M-1994 AS AMENDED BY THE GM GLOBAL DIMENSIONING AND TOLERANCING ADDENDUM-2001. SEPARATE PATTERNS OF FEATURES MAY BE GAGED SEPARATELY REGARDLESS OF DATUM REFERENCES.

ALL DIMENSIONS ARE IN MILLIMETERS

REFERENCE

THIRD ANGLE PROJECTION

DO NOT SCALE

USE MATH DATA

NX

APTIV

CONNECTION SYSTEMS

Anting, China

COPYRIGHT 2017 APTIV. ALL RIGHTS RESERVED.

THIS DRAWING IS THE PROPERTY OF APTIV AND CONTAINS APTIV CONFIDENTIAL INFORMATION. THE REPRODUCTION, DISTRIBUTION AND UTILIZATION OF THIS DOCUMENT OR ITS RELATED CAD MATH DATA, AS WELL AS COMMUNICATION OF ANY CONTENT TO OTHERS, WITHOUT EXPRESS AUTHORIZATION, IS PROHIBITED.

		DATE
DR		
APVD1	HUIWEI HUANG	250C17
APVD2	YU TIMON	250C17
APVD3	WEIGUO JIANG	250C17
APVD4		
APVD5		

SUBSTANCES OF CONCERN AND RECYCLED CONTENT PER APTIV 1094900I

MATERIAL: SEE CHART

DRAWING NAME: TAXI ASM TERM SLV/PIN AG SEALED

DRAWING NUMBER: 33383884

SIZE	SCALE	FRAME NO	SHEET NO	STG	REV	N/P
A1	2:1	1 OF 1	1 OF 1	R	02	-

User: 138671 Date: 28-Jun-22 Time: 18:31:49
Proj: 1384_04-CISO1-S02/02
Path: 12BKU_06282022_13:00:15/pcbs.prt