MOD	Description	Please follow Pulse Limits for the hazardous substances (RoHS, halogens) in the document "Pulse Hazardous Substances (HS) Limits (RPGE002-03)" and "Vendor Survey Questionnaire, Material Composition (LOM-SAF-L0040)".	Reliability Test Spec accorinding to WIHS7.5.33 (Reliability Test Working Instruction) Default test standard is Test Standard A if no definition
P3	Change the Logo		

(pick&placenozzle)

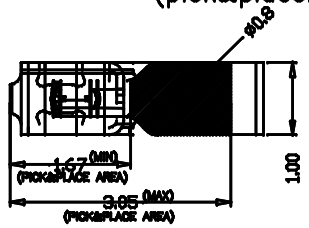

NOTES:UNLESS OTHERWISE SPECIFIED

1. DIM. MARKED TO BE CHECKED.
2. MATERIAL: Stainless steel THICKNESS T=0.10mm
3. NO CRACK APPEARS ON CONTACT BALL SHAPE.
4. NO LINES APPEARS ON BENDING AREA.
5. ALL UNSPECIFIED RADII TO BE 0.05 MAXIMUM .
6. BURR:0.03MAX;CUMBER:1.5MM MAX/500MM; TWIST:20°/500MM.
7. PRE-LOAD FORCE:0.40N ON CONTACT POINT
8. PLATING: 10u" Min GOLD PLATING ON CONTACT AREA,
   3u" Min GOLD PLATING ON SOLDER AREA,
   50u" MIN NICKEL PLATING OVER ALL

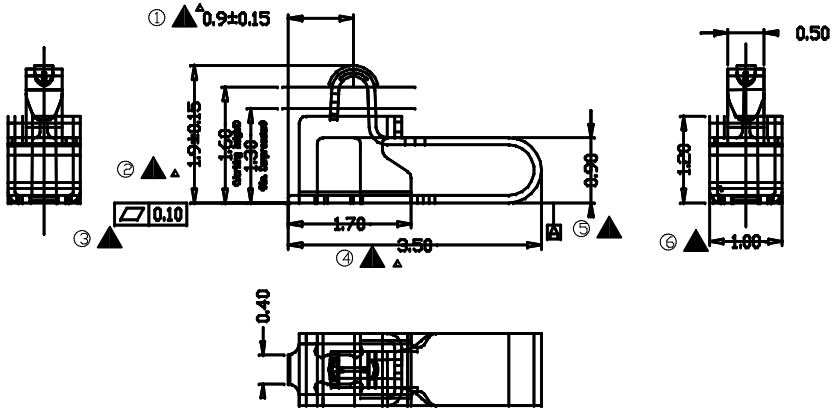

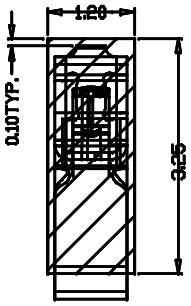

RECOMMENDED PCB LAYOUT

TOLERANCE:±0.05

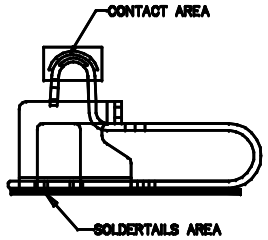

Plating Area

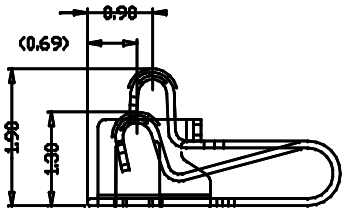

STATE AT
WORKING HEIGHT 1.3 MM

.X± 0.15	
.XX± 0.10	
.XXX±0.05	
X.°± 5°	

PULSE (SUZHOU) WIRELESS PRODUCTS CO.LTD.

Pulse A WALTER Company

99 HUOJU RD. SUZHOU
NEW DISTRICT
215009
P.R.CHINA

PRODUCT(S)
SW0167N

ITEM
TX13011-001(CLIP)

THIRD ANGLE PROJECTION

SHEET NUMBER		1 / 1			
GENERAL TOLERANCE					
CUSTOMER NUMBER					
SCALE 4.000	DESIGN	JACKIE	JUN-28-18		
	CHECKED	MARK	Nov-22-17		
	APPROVED	JAMES	Nov-22-17	P3	March-07-19	CHRIS
DOCUMENT NUMBER SW0167N	PART VERSION P01	DOCUMENT VERSION P3		P2	Oct-26-18	Chris
				P1	JUN-28-18	JACKIE
				MOD	DATE	NAME

Confidential
This is a proprietary information of Pulse Suzhou.
No reporduction/copying is allowed without permission.

Functional Characteristics Key (Cpk requirement : Cpk))

◊ Process Capability Studies required(total pcs)

♦ Ongoing Statistical Process Control Required (total pcs)

– Critical dimension need to be measured, no CPK requirement (total pcs)