DATE	DESCRIPTION	REV.
2.17.10	CHANGE AS PER ECN 22-047	A
10.08.13	CHANGE AS PER ECN 13-090	B
3.30.17	CHANGE AS PER ECN17-029	C
3.07.22	CHANGE AS PER ECN22-047 ADD NOTE#3	D

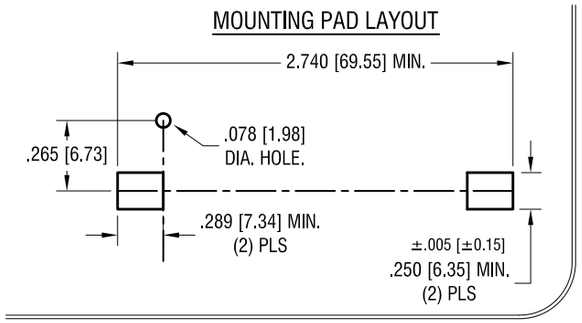

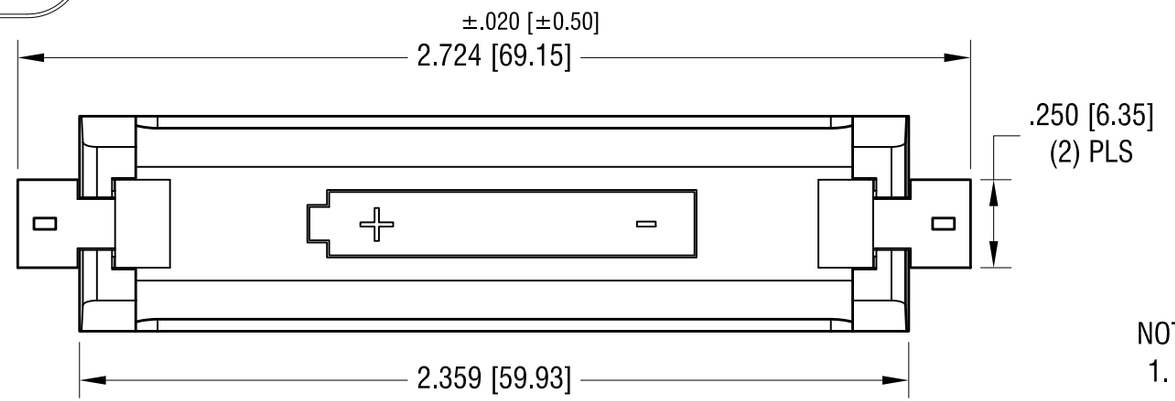

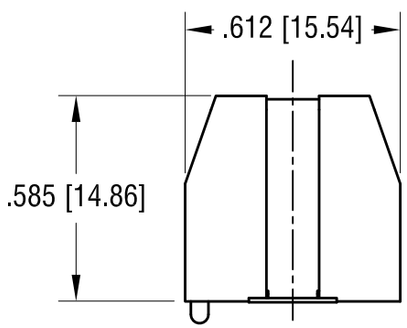

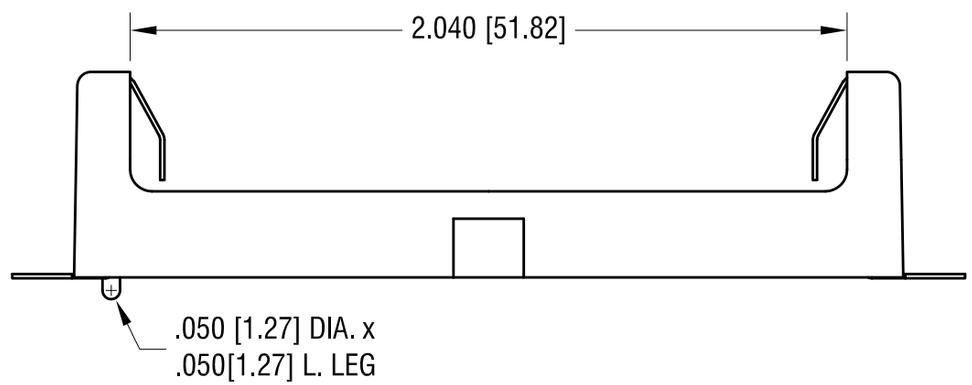

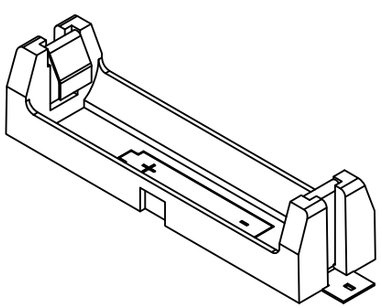

NOTE:

1. BASE:
   MAT'L: HEAT RESISTANCE NYLON
   STANYL 46 OR EQUIVALENT
2. CONTACT:
   MAT'L: .012 [0.30] THK STAINLESS STEEL
   FINISH: GOLD FLASH, OVER NICKEL PLATE.
3. SPECIAL PACKAGING:
   PART SUPPLIED ON TRAY, 50 PCS PER TRAY

THIS DOCUMENT IS THE PROPERTY OF KEYSTONE ELECTRONICS CORP. AND SHALL NOT BE REPRODUCED, DISTRIBUTED OR USED AS A BASIS FOR MANUFACTURE WITHOUT PRIOR WRITTEN PERMISSION FROM KEYSTONE ELECTRONICS CORP.

KEYSTONE ELECTRONICS CORP.
www.keyelco.com • NEW HYDE PARK, NY 11040 • Tel (516) 328-7500

PART NAME	SM BATTERY HOLDER, AA		
MATERIAL	AS NOTED		
FINISH	AS NOTED	DRN BY NT	DATE 12.09.09
		APP'D RH	SCALE 2X
TOLERANCES INCH [MM] DECIMAL ± .010 [± 0.25] ANGULAR ± 1° UNLESS OTHERWISE SPECIFIED	CODE C	DWG NO. 1024	