FAIRCHILD™

Is Now Part of

ON Semiconductor®

To learn more about ON Semiconductor, please visit our website at
www.onsemi.com

Please note: As part of the Fairchild Semiconductor integration, some of the Fairchild orderable part numbers will need to change in order to meet ON Semiconductor's system requirements. Since the ON Semiconductor product management systems do not have the ability to manage part nomenclature that utilizes an underscore (_), the underscore (_) in the Fairchild part numbers will be changed to a dash (-). This document may contain device numbers with an underscore (_). Please check the ON Semiconductor website to verify the updated device numbers. The most current and up-to-date ordering information can be found at www.onsemi.com. Please email any questions regarding the system integration to Fairchild_questions@onsemi.com.

ON Semiconductor and the ON Semiconductor logo are trademarks of Semiconductor Components Industries, LLC dba ON Semiconductor or its subsidiaries in the United States and/or other countries. ON Semiconductor owns the rights to a number of patents, trademarks, copyrights, trade secrets, and other intellectual property. A listing of ON Semiconductor's product/patent coverage may be accessed at www.onsemi.com/site/pdf/Patent-Marking.pdf. ON Semiconductor reserves the right to make changes without further notice to any products herein. ON Semiconductor makes no warranty, representation or guarantee regarding the suitability of its products for any particular purpose, nor does ON Semiconductor assume any liability arising out of the application or use of any product or circuit, and specifically disclaims any and all liability, including without limitation special, consequential or incidental damages. Buyer is responsible for its products and applications using ON Semiconductor products, including compliance with all laws, regulations and safety requirements or standards, regardless of any support or applications information provided by ON Semiconductor. "Typical" parameters which may be provided in ON Semiconductor data sheets and/or specifications can and do vary in different applications and actual performance may vary over time. All operating parameters, including "Typicals" must be validated for each customer application by customer's technical experts. ON Semiconductor does not convey any license under its patent rights nor the rights of others. ON Semiconductor products are not designed, intended, or authorized for use as a critical component in life support systems or any FDA Class 3 medical devices or medical devices with a same or similar classification in a foreign jurisdiction or any devices intended for implantation in the human body. Should Buyer purchase or use ON Semiconductor products for any such unintended or unauthorized application, Buyer shall indemnify and hold ON Semiconductor and its officers, employees, subsidiaries, affiliates, and distributors harmless against all claims, costs, damages, and expenses, and reasonable attorney fees arising out of, directly or indirectly, any claim of personal injury or death associated with such unintended or unauthorized use, even if such claim alleges that ON Semiconductor was negligent regarding the design or manufacture of the part. ON Semiconductor is an Equal Opportunity/Affirmative Action Employer. This literature is subject to all applicable copyright laws and is not for resale in any manner.

FAIRCHILD SEMICONDUCTOR®

March 2012

FXLA101
Low-Voltage Dual-Supply 1-Bit Voltage Translator with Auto Direction Sensing

Features

- Bi-Directional Interface between Two Levels: from 1.1V to 3.6V
- Fully Configurable: Inputs and Outputs Track V_{CC}
- Non-Preferential Power-Up; Either V_{CC} May Be Powered Up First
- Outputs Switch to 3-State if Either V_{CC} is at GND
- Power-Off Protection
- Bus-Hold on Data Inputs Eliminates the Need for Pull-Up Resistors; Do Not Use Pull-Up Resistors on A or B Ports
- Control Input (/OE) Referenced to V_{CCA} Voltage
- Packaged in MicroPak™ 6 (1.00mm x 1.45mm)
- Direction Control Not Necessary
- 100Mbps Throughput when Translating Between 1.8V and 2.5V
- ESD Protection Exceeds:
  - 8kV HBM (per JESD22-A114 & Mil Std 883e 3015.7)
  - 2kV CDM (per ESD STM 5.3)

Applications

- Cell Phones, PDAs, Digital Cameras, Portable GPS

Description

The FXLA101 is a configurable dual-voltage supply translator for both uni-directional and bi-directional voltage translation between two logic levels. The device allows translation between voltages as high as 3.6V to as low as 1.1V. The A port tracks the V_{CCA} level and the B port tracks the V_{CCB} level. This allows for bi-directional voltage translation over a variety of voltage levels: 1.2V, 1.5V, 1.8V, 2.5V, and 3.3V.

The device remains in three-state as long as either V_{CC}=0V, allowing either V_{CC} to be powered up first. Internal power-down control circuits place the device in 3-state if either V_{CC} is removed.

The /OE input, when HIGH, disables both the A and B ports by placing them in a 3-state condition. The /OE input is supplied by V_{CCA}.

The FXLA101 supports bi-directional translation without the need for a direction control pin. The two ports of the device have auto-direction sense capability. Either port may sense an input signal and transfer it as an output signal to the other port.

Ordering Information

Part Number	Top Mark	Operating Temperature Range	Package	Packing Method
FXLA101L6X	XK	-40 to 85°C	6-Lead MicroPak™1.00mm x 1.45mm Package	5K Units Tape and Reel
FXLA101FHX	XK		6-Lead, MicroPak2™, 1x1mm Body, .35mm Pitch	

© 2009 Fairchild Semiconductor Corporation

Pin Configuration

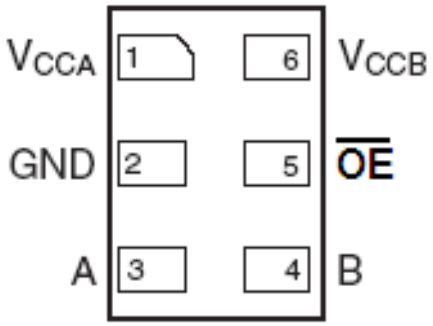

Figure 1. Pin Configuration (Top Through View)

Pin Definitions

Pin #	Name	Description
1	V_{CCA}	A-Side Power Supply
2	GND	Ground
3	A	A Side Input or 3-State Output
4	B	B Side Input or 3-State Output
5	/OE	Output Enable Input
6	V_{CCB}	B Side Power supply

Functional Diagram

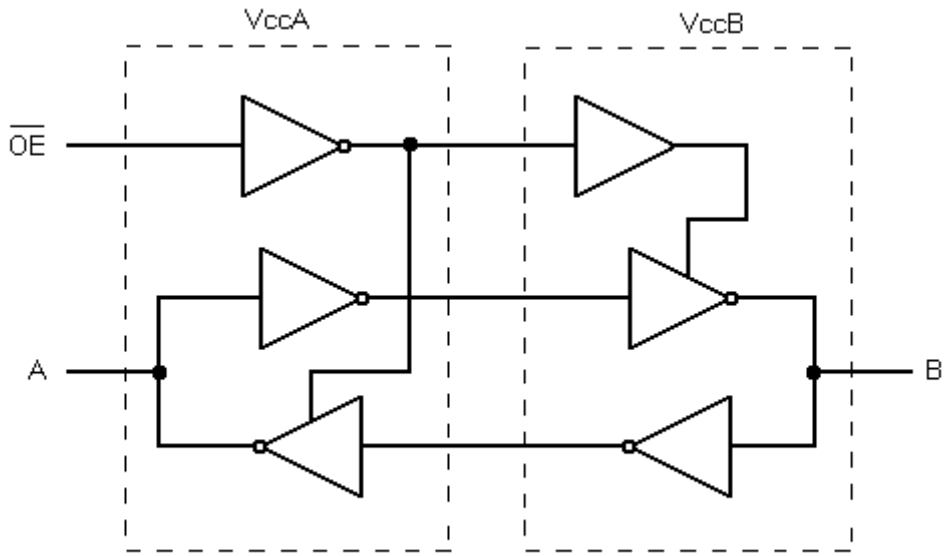

Figure 2. Functional Diagram

Function Table

Control	Outputs
/OE	
L	Normal Operation
H	3-State

H = HIGH Logic Level

L = LOW Logic Level

Absolute Maximum Ratings

Stresses exceeding the absolute maximum ratings may damage the device. The device may not function or be operable above the recommended operating conditions and stressing the parts to these levels is not recommended. In addition, extended exposure to stresses above the recommended operating conditions may affect device reliability. The absolute maximum ratings are stress ratings only.

Symbol	Parameter	Conditions	Min.	Max.	Unit
V_{CC}	Supply Voltage	V_{CCA}	-0.5	4.6	V
		V_{CCB}	-0.5	4.6	
V_I	DC Input Voltage	I/O Ports A and B	-0.5	4.6	V
		Control Input (/OE)	-0.5	4.6	
V_O	Output Voltage(2)	Output 3-State	-0.5	4.6	V
		Output Active (A_n)	-0.5	V_{CCA} +0.5	
		Output Active (B_n)	-0.5	V_{CCB} +0.5	
I_{IK}	DC Input Diode Current	V_I<0V		-50	mA
I_{OK}	DC Output Diode Current	V_O<0V		-50	mA
		V_O>V_{CC}		+50	
I_{OH}/I_{OL}	DC Output Source/Sink Current		-50	+50	mA
I_{CC}	DC V_{CC} or Ground Current (per Supply Pin)			±100	mA
T_{STG}	Storage Temperature Range		-65	+150	°C
P_D	Power Dissipation			4.5	mW
ESD	Human Body Model, JESD22-A114	B Port I/O to GND		12	kV
		A Port I/O to GND		8	
	Charged Device Model, JESD22-C101			2	

Notes:
1. I_O absolute maximum ratings must be observed.
2. All unused inputs and input/outputs must be held at V_{CCi} or GND.

Recommended Operating Conditions

The Recommended Operating Conditions table defines the conditions for actual device operation. Recommended operating conditions are specified to ensure optimal performance to the datasheet specifications. Fairchild does not recommend exceeding them or designing to Absolute Maximum Ratings.

Symbol	Parameter	Conditions	Min.	Max.	Unit
V_{CC}	Power Supply	Operating V_{CCA} or V_{CCB}	1.1	3.6	V
V_{IN}	Input Voltage	Ports A and B	0	3.6	V
		Control Input (/OE)	0	V_{CCA}	V
T_A	Operating Temperature, Free Air		-40	+85	°C
dt/dV	Minimum Input Edge Rate	$V_{CCA/B}$ = 1.1 to 3.6V		10	ns/V
Θ_{JA}	Thermal Resistance	Micropak-6		350	°C/W
		Micropak2-6		560	

Power-Up/Power-Down Sequence

FXL translators offer an advantage in that either V_{CC} may be powered up first. This benefit derives from the chip design. When either V_{CC} is at 0V, outputs are in a high-impedance state. The control input (/OE) is designed to track the V_{CCA} supply. A pull-up resistor tying /OE to V_{CCA} should be used to ensure that bus contention, excessive currents, or oscillations do not occur during power-up or power-down. The size of the pull-up resistor is based upon the current-sinking capability of the device driving the /OE pin.

The recommended power-up sequence is:

1. Apply power to the first V_{CC}.
2. Apply power to the second V_{CC}.
3. Drive the /OE input LOW to enable the device.

The recommended power-down sequence is:

1. Drive /OE input HIGH to disable the device.
2. Remove power from either V_{CC}.
3. Remove power from other V_{CC}.

Pull-Up/Pull-Down Resistors

Do not use pull-up or pull-down resistors. This device has bus-hold circuits: pull-up or pull-down resistors are not recommended because they interfere with the output state. The current through these resistors may exceed the hold drive, $I_{I(HOLD)}$ and/or $I_{I(OD)}$ bus-hold currents. The bus-hold feature eliminates the need for extra resistors.

DC Electrical Characteristics

T_A=-40 to 85°C.

Symbol	Parameter	Conditions	V_{CCA} (V)	V_{CCB} (V)	Min.	Typ.	Max.	Units
V_{IHA}	High-Level Input Voltage	Data Inputs A_n Control Pin /OE	2.70 to 3.60	1.10 to 3.60	2.00			V
			2.30 to 2.70		1.60			
			1.65 to 2.30		.65xV_{CCA}			
			1.40 to 1.65		.65xV_{CCA}			
			1.10 to 1.40		.90xV_{CCA}			
V_{IHB}		Data Inputs B_n	1.10 to 3.60	2.70 to 3.60	2.00			V
				2.30 to 2.70	1.60			
				1.65 to 2.30	.65xV_{CCB}			
				1.40 to 1.65	.65xV_{CCB}			
				1.10 to 1.40	.90xV_{CCB}			
V_{ILA}	Low-Level Input Voltage	Data Inputs A_n Control Pin /OE	2.70 to 3.60	1.10 to 3.60			.80	V
			2.30 to 2.70				.70	
			1.65 to 2.30				.35xV_{CCA}	
			1.40 to 1.65				.35xV_{CCA}	
			1.10 to 1.40				.10xV_{CCA}	
V_{ILB}		Data Inputs B_n	1.10 to 3.60	2.70 to 3.60			.80	V
				2.30 to 2.70			.70	
				1.65 to 2.30			.35xV_{CCB}	
				1.40 to 1.65			.35xV_{CCB}	
				1.10 to 1.40			.10xV_{CCB}	
V_{OHA}	High-Level Output Voltage(3)	I_{OH}=-4µA	1.10 to 3.60	1.10 to 3.60	V_{CCA} - .40			V
V_{OHB}		I_{OH}=-4µA	1.10 to 3.60	1.10 to 3.60	V_{CCB} - .40			
V_{OLA}	Low-Level Output Voltage(3)	I_{OL}=4µA	1.10 to 3.60	1.10 to 3.60			.4	V
V_{OLB}		I_{OL}=4µA	1.10 to 3.60	1.10 to 3.60			.4	
$I_{I(HOLD)}$	Bus-Hold Input Minimum Drive Current	V_{IN}=0.80V	3.00	3.00	75.0			µA
		V_{IN}=2.00V	3.00	3.00	-75.0			
		V_{IN}=0.7V	2.30	2.30	45.0			
		V_{IN}=1.60V	2.30	2.30	-45.0			
		V_{IN}=0.57V	1.65	1.65	25.0			
		V_{IN}=1.07V	1.65	1.65	-25.0			
		V_{IN}=0.49V	1.40	1.40	11.0			
		V_{IN}=0.91V	1.40	1.40	-11.0			
		V_{IN}=0.11V	1.10	1.10		4.0		
		V_{IN}=0.99V	1.10	1.10		-4.0		

Continued on following page…

DC Electrical Characteristics (Continued)

T_A=-40 to 85°C.

Symbol	Parameter	Conditions	V_{CCA} (V)	V_{CCB} (V)	Min.	Max.	Units
$I_{I(ODH)}$	Bus-Hold Input Overdrive High Current[4]	Data Inputs A_n, B_n	3.60	3.60	450.00		µA
			2.70	2.70	300.00		
			1.95	1.95	200.00		
			1.60	1.60	120.00		
			1.40	1.40	80.00		
$I_{I(ODL)}$	Bus-Hold Input Overdrive Low Current[5]	Data Inputs A_n, B_n	3.60	3.60	-450.00		µA
			2.70	2.70	-300.00		
			1.95	1.95	-200.00		
			1.60	1.60	-120.00		
			1.40	1.40	-80.00		
I_I	Input Leakage Current	Control Inputs /OE, V_I=V_{CCA} or GND	1.10 to 3.60	3.60		±1.0	µA
I_{OFF}	Power-Off Leakage Current	A_n V_O=0V to 3.6V	0	3.6		±2.0	µA
		B_n V_O=0V to 3.6V	3.60	0		±2.0	
I_{OZ}	3-State Output Leakage	A_n, B_n V_O=0V or 3.6V, /OE=V_{IH}	3.6	3.60		±5.0	µA
		A_n V_O=0V or 3.6V, /OE=GND	3.60	0		±5.0	
		B_n V_O=0V or 3.6V, /OE=GND	0	3.60		±5.0	
$I_{CCA/B}$	Quiescent Supply Current[6, 7]	V_I=V_{CCI} or GND; I_O=0, /OE=GND	1.10 to 3.60	1.10 to 3.60		10.0	µA
I_{CCZ}		V_I=V_{CCI} or GND; I_O=0, /OE=V_{IH}	1.10 to 3.60	1.10 to 3.60		10.0	µA
I_{CCA}	Quiescent Supply Current	V_I=V_{CCB} or GND; I_O=0 B-to-A Direction, /OE=GND	0	1.10 to 3.60		-10.0	µA
		V_I=V_{CCA} or GND; I_O=0 A-to-B Direction	1.10 to 3.60	0		10.0	
I_{CCB}		V_I=V_{CCA} or GND; I_O=0, A-to-B Direction, /OE=GND	1.10 to 3.60	0		-10.0	µA
		V_I=V_{CCB} or GND; I_O=0 B-to-A Direction	0	1.10 to 3.60		10.0	

Notes:

3. This is the output voltage for static conditions. Dynamic drive specifications are given in the Dynamic Output Electrical Characteristics table.
4. An external drive must source at least the specified current to switch LOW-to-HIGH.
5. An external drive must source at least the specified current to switch HIGH-to-LOW.
6. V_{CCI} is the V_{CC} associated with the input side.
7. Reflects current per supply, V_{CCA} or V_{CCB}.

Dynamic Output Electrical Characteristic

A Port (A_n)

Output Load: C_L=15pF, $R_L \geq$ MΩ ($C_{I/O}$=4pF), T_A=-40 to 85°C

Symbol	Parameter	V_{CCA}=3.0V to 3.6V		V_{CCA}=2.3V to 2.7V		V_{CCA}=1.65V to 1.95V		V_{CCA}=1.4V to 1.6V		V_{CCA}=1.1V to 1.3V	Units
		Typ.	Max.	Typ.	Max.	Typ.	Max	Typ.	Max.	Typ.	
t_{rise}	Output Rise Time A Port(9)		3.0		3.5		4.0		5.0	7.5	ns
t_{fall}	Output Fall Time A Port(10)		3.0		3.5		4.0		5.0	7.5	ns
I_{OHD}	Dynamic Output Current High(9)	-11.4		-7.5		-4.7		-3.2		-1.7	mA
I_{OLD}	Dynamic Output Current Low(10)	+11.4		+7.5		+4.7		+3.2		+1.7	mA

B Port (B_n)

Output Load: C_L=15pF, $R_L \geq$ MΩ ($C_{I/O}$=5pF), T_A=-40 to 85°C

Symbol	Parameter	V_{CCB}=3.0V to 3.6V		V_{CCB}=2.3V to 2.7V		V_{CCB}=1.65V to 1.95V		V_{CCB}=1.4V to 1.6V		V_{CCB}=1.1V to 1.3V	Units
		Typ.	Max.	Typ.	Max.	Typ.	Max	Typ.	Max.	Typ.	
t_{rise}	Output Rise Time B Port(9)		3.0		3.5		4.0		5.0	7.5	ns
t_{fall}	Output Fall Time B Port(10)		3.0		3.5		4.0		5.0	7.5	ns
I_{OHD}	Dynamic Output Current High(9)	-12.0		-7.9		-5.0		-3.4		-1.8	mA
I_{OLD}	Dynamic Output Current Low(10)	+12.0		+7.9		+5.0		+3.4		+1.8	mA

Notes:

8. Dynamic output characteristics are guaranteed, but not tested.
9. *See Figure 7.*
10. *See Figure 8.*

AC Characteristics

V_{CCA} = 3.0V to 3.6V, T_A=-40 to 85°C

Symbol	Parameter	V_{CCB}=3.0V to 3.6V		V_{CCB}=2.3V to 2.7V		V_{CCB}=1.65V to 1.95V		V_{CCB}=1.4V to 1.6V		V_{CCB}=1.1V to 1.3V	Units
		Min.	Max.	Min.	Max.	Min.	Max	Min.	Max.	Typ.	
t_{PLH},t_{PHL}	A to B	0.2	4.0	0.3	4.2	0.5	5.4	0.6	6.8	6.9	ns
	B to A	0.2	4.0	0.2	4.1	0.3	5.0	0.5	6.0	4.5	ns
t_{PZL},t_{PZH}	/OE to A, /OE to B		1.7		1.7		1.7		1.7	1.7	µs
t_{SKEW}	A Port, B Port(11)		0.5		0.5		0.5		1.0	1.0	ns

V_{CCA} = 2.3V to 2.7V, T_A=-40 to 85°C

Symbol	Parameter	V_{CCB}=3.0V to 3.6V		V_{CCB}=2.3V to 2.7V		V_{CCB}=1.65V to 1.95V		V_{CCB}=1.4V to 1.6V		V_{CCB}=1.1V to 1.3V	Units
		Min.	Max.	Min.	Max.	Min.	Max	Min.	Max.	Typ.	
t_{PLH},t_{PHL}	A to B	0.2	4.1	0.4	4.5	0.5	5.6	0.8	6.9	7.0	ns
	B to A	0.3	4.2	0.4	4.5	0.5	5.5	0.5	6.5	4.8	ns
t_{PZL},t_{PZH}	/OE to A, /OE to B		1.7		1.7		1.7		1.7	1.7	µs
t_{SKEW}	A Port, B Port(11)		0.5		0.5		0.5		1.0	1.0	ns

V_{CCA} = 1.65V to 1.95V, T_A=-40 to 85°C

Symbol	Parameter	V_{CCB}=3.0V to 3.6V		V_{CCB}=2.3V to 2.7V		V_{CCB}=1.65V to 1.95V		V_{CCB}=1.4V to 1.6V		V_{CCB}=1.1V to 1.3V	Units
		Min.	Max.	Min.	Max.	Min.	Max	Min.	Max.	Typ.	
t_{PLH},t_{PHL}	A to B	0.3	5.0	0.5	5.5	0.8	6.7	0.9	7.5	7.5	ns
	B to A	0.5	5.4	0.5	5.6	0.8	6.7	1.0	7.0	5.4	ns
t_{PZL},t_{PZH}	/OE to A, /OE to B		1.7		1.7		1.7		1.7	1.7	µs
t_{SKEW}	A Port, B Port(11)		0.5		0.5		0.5		1.0	1.0	ns

Note:

11. Skew is the variation of propagation delay between output signals and applies only to output signals on the same port (A_n or B_n) and switching with the same polarity (LOW-to-HIGH or HIGH-to-LOW) *(see Figure 10).* Skew is guaranteed, but not tested.

AC Characteristics (Continued)

V_{CCA} = 1.4V to 1.6V, T_A=-40 to 85°C

Symbol	Parameter	V_{CCB}=3.0V to 3.6V		V_{CCB}=2.3V to 2.7V		V_{CCB}=1.65V to 1.95V		V_{CCB}=1.4V to 1.6V		V_{CCB}=1.1V to 1.3V	Units
		Min.	Max.	Min.	Max.	Min.	Max	Min.	Max.	Typ.	
t_{PLH},t_{PHL}	A to B	0.5	6.0	0.5	6.5	1.0	7.0	1.0	8.5	7.9	ns
	B to A	0.6	6.8	0.8	6.9	0.9	7.5	1.0	8.5	6.1	ns
t_{PZL},t_{PZH}	/OE to A, /OE to B		1.7		1.7		1.7		1.7	1.7	µs
t_{SKEW}	A Port, B Port(12)		1.0		1.0		1.0		1.0	1.0	ns

V_{CCA} = 1.1V to 1.3V, T_A=-40 to 85°C

Symbol	Parameter	V_{CCB}=3.0V to 3.6V	V_{CCB}=2.3V to 2.7V	V_{CCB}=1.65V to 1.95V	V_{CCB}=1.4V to 1.6V	V_{CCB}=1.1V to 1.3V	Units
		Typ.	Typ.	Typ.	Typ.	Typ.	
t_{PLH},t_{PHL}	A to B	4.6	4.8	5.4	6.2	9.2	ns
	B to A	6.8	7.0	7.4	7.8	9.1	ns
t_{PZL},t_{PZH}	/OE to A, /OE to B	1.7	1.7	1.7	1.7	1.7	µs
t_{SKEW}	A Port, B Port(12)	1.0	1.0	1.0	1.0	1.0	ns

Note:

12. Skew is the variation of propagation delay between output signals and applies only to output signals on the same port (A_n or B_n) and switching with the same polarity (LOW-to-HIGH or HIGH-to-LOW) *(see Figure 10).* Skew is guaranteed, but not tested.

Maximum Data Rate

T_A=-40 to 85°C.

V_{CCA}	V_{CCB}=3.0V to 3.6V	V_{CCB}=2.3V to 2.7V	V_{CCB}=1.65V to 1.95V	V_{CCB}=1.4V to 1.6V	V_{CCB}=1.1V to 1.3V	Units
	Min.	**Min.**	**Min.**	**Min.**	**Typ.**	
V_{CCA}=3.00V to 3.60V	140	120	100	80	40	Mbps
V_{CCA}=2.30V to 2.70V	120	120	100	80	40	Mbps
V_{CCA}=1.65V to 1.95V	100	100	80	60	40	Mbps
V_{CCA}=1.40V to 1.60V	80	80	60	60	40	Mbps
V_{CCA}=1.10V to 1.30V	**Typ.**	**Typ.**	**Typ.**	**Typ.**	**Typ.**	
	40	40	40	40	40	Mbps

Notes:
13. Maximum data rate is guaranteed, but not tested.
14. Maximum data rate is specified in megabits per second *(see Figure 9)*. It is equivalent to two times the F-toggle frequency, specified in megahertz. For example, 100Mbps is equivalent to 50MHz.

Capacitance

Symbol	Parameter		Conditions	T_A=+25°C Typical	Units
C_{IN}	Input Capacitance Control Pin (/OE)		V_{CCA}=V_{CCB}=GND	3	pF
$C_{I/O}$	Input/Output Capacitance	A_n	V_{CCA}=V_{CCB}=3.3V, /OE=V_{CCA}	4	pF
		B_n		5	
C_{pd}	Power Dissipation Capacitance		V_{CCA}=V_{CCB}=3.3V, V_I=0V or V_{CC}, f=10MHz	25	pF

I/O Architecture Benefit

The FXLA101 I/O architecture benefits the end user, beyond level translation, in the following three ways:

Auto Direction without an external direction pin.

Drive Capacitive Loads. Automatically shifts to a higher current drive mode only during “Dynamic Mode” or HL / LH transitions.

Lower Power Consumption. Automatically shifts to low-power mode during “Static Mode” (no transitions), lowering power consumption.

The FXLA101 does not require a direction pin. Instead, the I/O architecture detects input transitions on both side and automatically transfers the data to the corresponding output. For example, for a given channel, if both A and B side are at a static LOW, the direction has been established as A → B, and a LH transition occurs on the B port; the FXLA101 internal I/O architecture automatically changes direction from A → B to B → A.

During HL / LH transitions, or “Dynamic Mode,” a strong output driver drives the output channel in parallel with a weak output driver. After a typical delay of approximately 10ns – 50ns, the strong driver is turned off, leaving the weak driver enabled for holding the logic state of the channel. This weak driver is called the “bus hold.” “Static Mode” is when only the bus hold drives the channel. The bus hold can be over ridden in the event of a direction change. The strong driver allows the FXLA101 to quickly charge and discharge capacitive transmission lines during dynamic mode. Static mode conserves power, where I_{CC} is typically < 5µA.

Bus Hold Minimum Drive Current

Specifies the minimum amount of current the bus hold driver can source/sink. The bus hold minimum drive current (II_{HOLD}) is V_{CC} dependent and guaranteed in the DC Electrical tables. The intent is to maintain a valid output state in a static mode, but that can be overridden when an input data transition occurs.

Bus Hold Input Overdrive Drive Current

Specifies the minimum amount of current required (by an external device) to overdrive the bus hold in the event of a direction change. The bus hold overdrive (II_{ODH}, II_{ODL}) is V_{CC} dependent and guaranteed in the DC Electrical tables.

Dynamic Output Current

The strength of the output driver during LH / HL transitions is *referenced on page 8, Dynamic Output Electrical Characteristics, I_{OHD}, and I_{OLD}.*

Test Diagrams

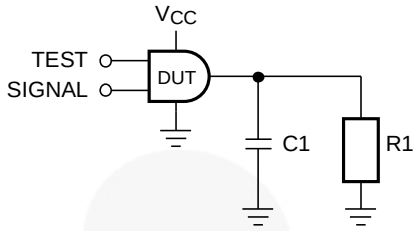

Figure 3. Test Circuit

Table 1. AC Test Conditions

Test	Input Signal	Output Enable Control
t_{PLH}, t_{PHL}	Data Pulses	0V
t_{PZL}	0V	HIGH to LOW Switch
t_{PZH}	V_{CCI}	HIGH to LOW Switch

Table 2. AC Load

V_{CCO}	C1	R1
1.2V± 0.1V	15pF	1MΩ
1.5V± 0.1V	15pF	1MΩ
1.8V ± 0.15V	15pF	1MΩ
2.5V ± 0.2V	15pF	1MΩ
3.3V ± 0.3V	15pF	1MΩ

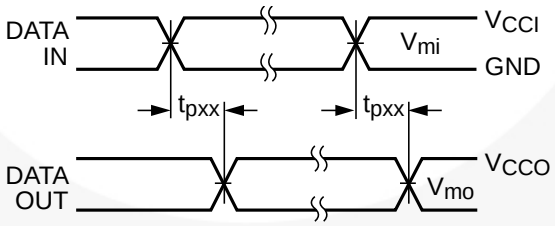

Figure 4. Waveform for Inverting and Non-Inverting Functions

Notes:
15. Input $t_R = t_F$ = 2.0ns, 10% to 90%.
16. Input $t_R = t_F$ = 2.5ns, 10% to 90%, at V_I = 3.0V to 3.6V only.

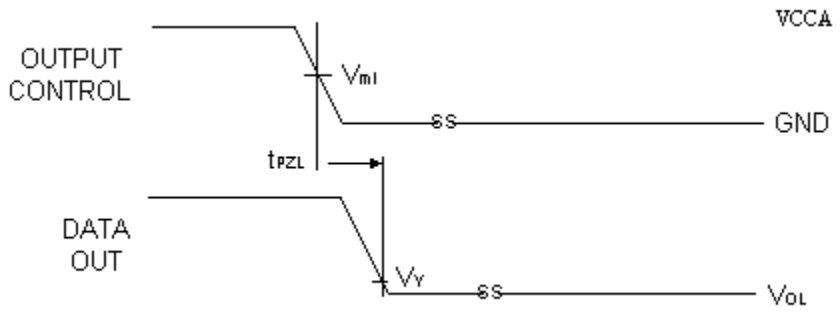

Figure 5. 3-State Output Low Enable Time for Low Voltage Logic

Notes:
17. Input $t_R = t_F$ = 2.0ns, 10% to 90%.
18. Input $t_R = t_F$ = 2.5ns, 10% to 90%, at V_I = 3.0V to 3.6V only.

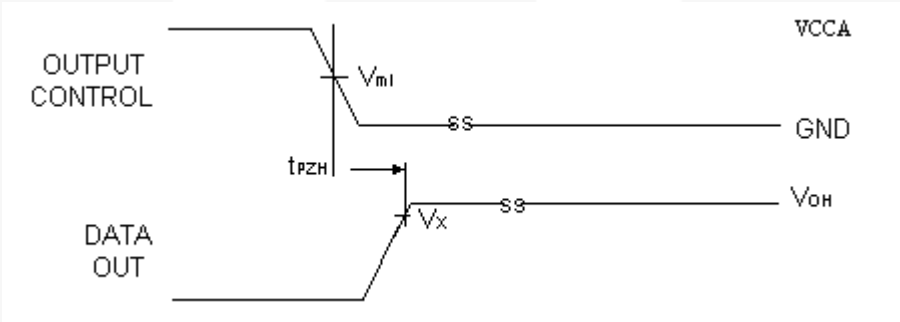

Figure 6. 3-State Output High Enable Time for Low Voltage Logic

Notes:
19. Input $t_R = t_F$ = 2.0ns, 10% to 90%.
20. Input $t_R = t_F$ = 2.5ns, 10% to 90%, at V_I = 3.0V to 3.6V only.

Table 3. Test Measure Points

Symbol	V_{DD}
V_{MI}[21]	V_{CCI} /2
V_{MO}	V_{CCo} /2
V_X	0.9 x V_{CCo}
V_Y	0.1 x V_{CCo}

Note:
21. $V_{CCI}=V_{CCA}$ for control pin /OE or $V_{MI}=(V_{CCA}/2)$.

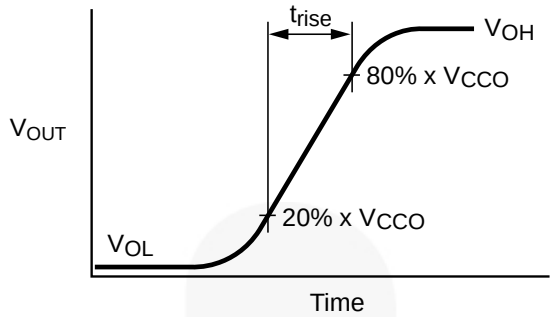

$$I_{OHD} \approx (C_L + C_{I/O}) \times \frac{\Delta V_{OUT}}{\Delta t} = (C_L + C_{I/O}) \times \frac{(20\% - 80\%) \bullet V_{CCO}}{t_{RISE}}$$

Figure 7. Active Output Rise Time and Dynamic Output Current High

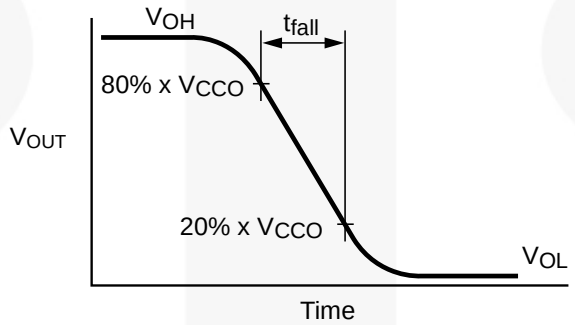

$$I_{OLD} \approx (C_L + C_{I/O}) \times \frac{\Delta V_{OUT}}{\Delta t} = (C_L + C_{I/O}) \times \frac{(80\% - 20\%) \bullet V_{CCO}}{t_{FALL}}$$

Figure 8. Active Output Fall Time and Dynamic Output Current Low

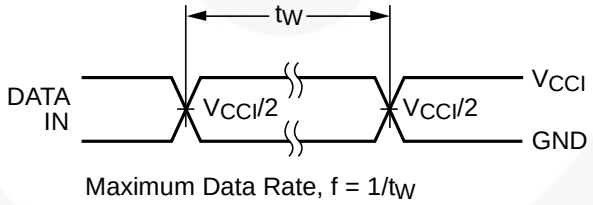

Figure 9. Maximum Data Rate

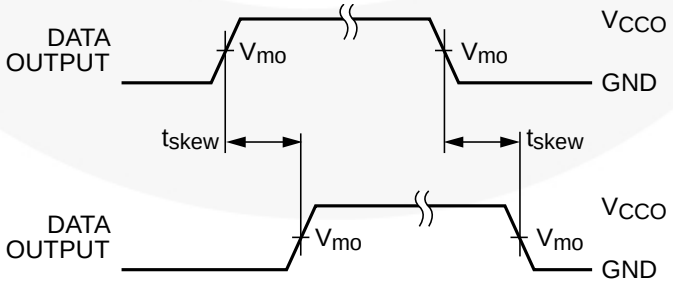

Figure 10. Output Skew Time

Note:

22. $t_{SKEW} = (t_{pHLmax} - t_{pHLmin})$ or $(t_{pLHmax} - t_{pLHmin})$

Physical Dimensions

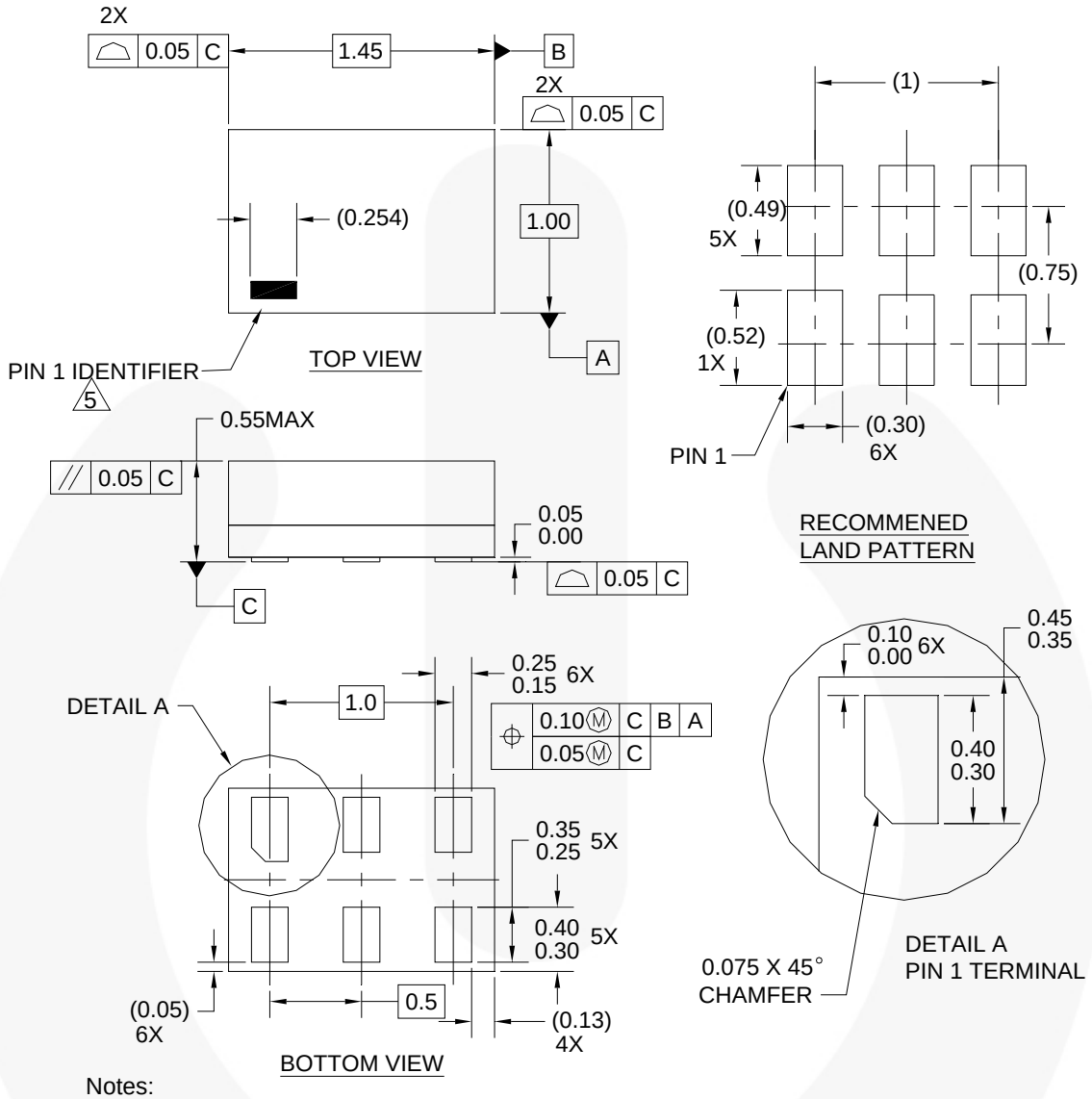

Notes:

1. CONFORMS TO JEDEC STANDARD M0-252 VARIATION UAAD
2. DIMENSIONS ARE IN MILLIMETERS
3. DRAWING CONFORMS TO ASME Y14.5M-1994
4. FILENAME AND REVISION: MAC06AREV4
5. PIN ONE IDENTIFIER IS 2X LENGTH OF ANY OTHER LINE IN THE MARK CODE LAYOUT.

Figure 11.6-Lead MicroPak™ 1.00mm x 1.45mm Package

Package drawings are provided as a service to customers considering Fairchild components. Drawings may change in any manner without notice. Please note the revision and/or date on the drawing and contact a Fairchild Semiconductor representative to verify or obtain the most recent revision. Package specifications do not expand the terms of Fairchild's worldwide terms and conditions, specifically the warranty therein, which covers Fairchild products.

Always visit Fairchild Semiconductor's online packaging area for the most recent package drawings: http://www.fairchildsemi.com/packaging/.

Physical Dimensions

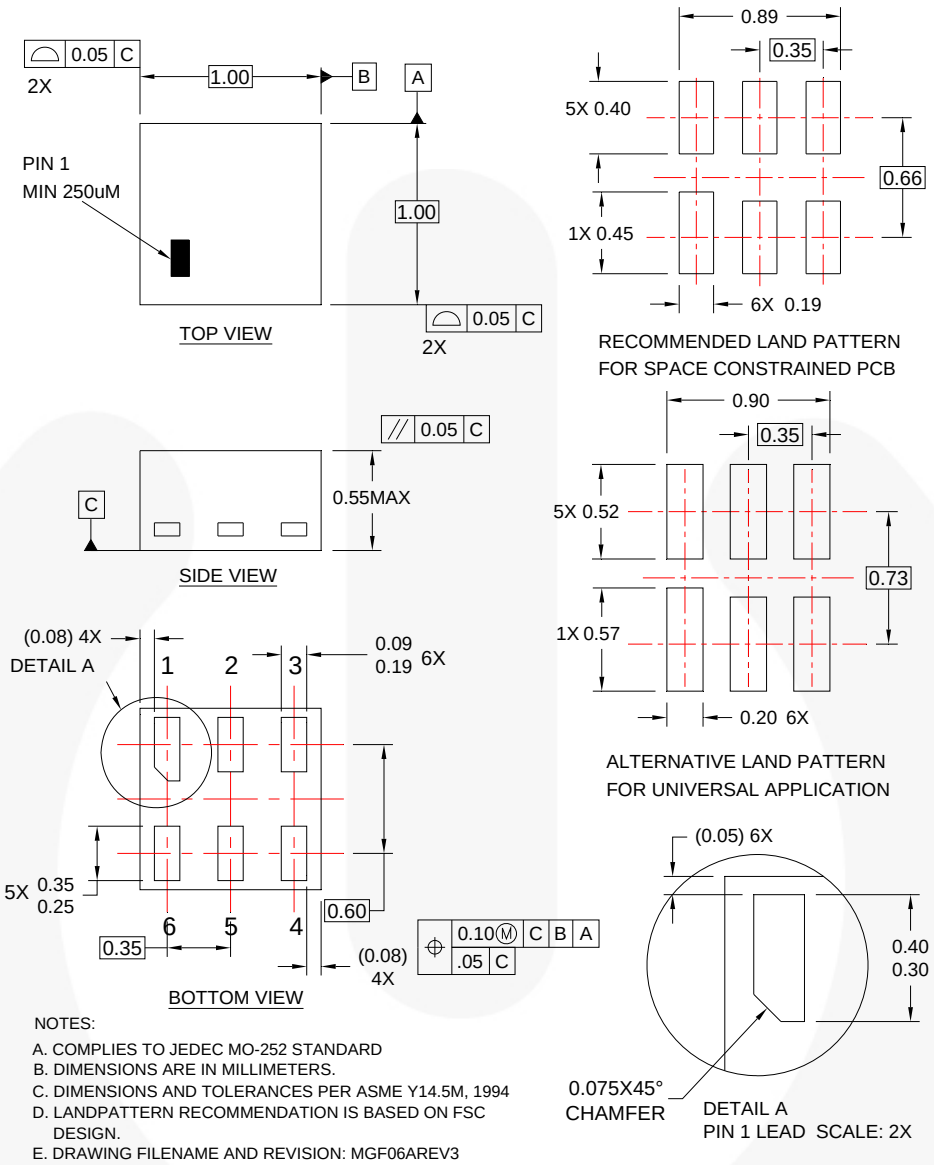

NOTES:

A. COMPLIES TO JEDEC MO-252 STANDARD
B. DIMENSIONS ARE IN MILLIMETERS.
C. DIMENSIONS AND TOLERANCES PER ASME Y14.5M, 1994
D. LANDPATTERN RECOMMENDATION IS BASED ON FSC DESIGN.
E. DRAWING FILENAME AND REVISION: MGF06AREV3

Figure 12.6-Lead, MicroPak2, 1x1mm Body, .35mm Pitch

Package drawings are provided as a service to customers considering Fairchild components. Drawings may change in any manner without notice. Please note the revision and/or date on the drawing and contact a Fairchild Semiconductor representative to verify or obtain the most recent revision. Package specifications do not expand the terms of Fairchild's worldwide terms and conditions, specifically the warranty therein, which covers Fairchild products.

Always visit Fairchild Semiconductor's online packaging area for the most recent package drawings: http://www.fairchildsemi.com/packaging/.

Tape and Reel Specification

Please visit Fairchild Semiconductor's online packaging area for the most recent tape and reel specifications: http://www.fairchildsemi.com/packaging/MicroPAK2_6L_tr.pdf.

Package Designator	Tape Section	Cavity Number	Cavity Status	Cover Type Status
FHX	Leader (Start End)	125 (Typical)	Empty	Sealed
	Carrier	5000	Filled	Sealed
	Trailer (Hub End)	75 (Typical)	Empty	Sealed

FAIRCHILD SEMICONDUCTOR®

TRADEMARKS

The following includes registered and unregistered trademarks and service marks, owned by Fairchild Semiconductor and/or its global subsidiaries, and is not intended to be an exhaustive list of all such trademarks.

2Cool™
AccuPower™
AX-CAP™*
BitSiC™
Build it Now™
CorePLUS™
CorePOWER™
CROSSVOLT™
CTL™
Current Transfer Logic™
DEUXPEED®
Dual Cool™
EcoSPARK®
EfficientMax™
ESBC™
Fairchild®
Fairchild Semiconductor®
FACT Quiet Series™
FACT®
FAST®
FastvCore™
FETBench™
FlashWriter®*
FPS™
F-PFS™
FRFET®
Global Power Resource℠
GreenBridge™
Green FPS™
Green FPS™ e-Series™
G*max*™
GTO™
IntelliMAX™
ISOPLANAR™
Making Small Speakers Sound Louder and Better™
MegaBuck™
MICROCOUPLER™
MicroFET™
MicroPak™
MicroPak2™
MillerDrive™
MotionMax™
Motion-SPM™
mWSaver™
OptoHiT™
OPTOLOGIC®
OPTOPLANAR®
PowerTrench®
PowerXS™
Programmable Active Droop™
QFET®
QS™
Quiet Series™
RapidConfigure™
™
Saving our world, 1mW/W/kW at a time™
SignalWise™
SmartMax™
SMART START™
Solutions for Your Success™
SPM®
STEALTH™
SuperFET®
SuperSOT™-3
SuperSOT™-6
SuperSOT™-8
SupreMOS®
SyncFET™
Sync-Lock™
SYSTEM GENERAL®*
The Power Franchise®
the power franchise
TinyBoost™
TinyBuck™
TinyCalc™
TinyLogic®
TINYOPTO™
TinyPower™
TinyPWM™
TinyWire™
TranSiC™
TriFault Detect™
TRUECURRENT®*
µSerDes™
µSerDes™
UHC®
Ultra FRFET™
UniFET™
VCX™
VisualMax™
VoltagePlus™
XS™

* Trademarks of System General Corporation, used under license by Fairchild Semiconductor.

DISCLAIMER

FAIRCHILD SEMICONDUCTOR RESERVES THE RIGHT TO MAKE CHANGES WITHOUT FURTHER NOTICE TO ANY PRODUCTS HEREIN TO IMPROVE RELIABILITY, FUNCTION, OR DESIGN. FAIRCHILD DOES NOT ASSUME ANY LIABILITY ARISING OUT OF THE APPLICATION OR USE OF ANY PRODUCT OR CIRCUIT DESCRIBED HEREIN; NEITHER DOES IT CONVEY ANY LICENSE UNDER ITS PATENT RIGHTS, NOR THE RIGHTS OF OTHERS. THESE SPECIFICATIONS DO NOT EXPAND THE TERMS OF FAIRCHILD'S WORLDWIDE TERMS AND CONDITIONS, SPECIFICALLY THE WARRANTY THEREIN, WHICH COVERS THESE PRODUCTS.

LIFE SUPPORT POLICY

FAIRCHILD'S PRODUCTS ARE NOT AUTHORIZED FOR USE AS CRITICAL COMPONENTS IN LIFE SUPPORT DEVICES OR SYSTEMS WITHOUT THE EXPRESS WRITTEN APPROVAL OF FAIRCHILD SEMICONDUCTOR CORPORATION.

As used herein:

1. Life support devices or systems are devices or systems which, (a) are intended for surgical implant into the body or (b) support or sustain life, and (c) whose failure to perform when properly used in accordance with instructions for use provided in the labeling, can be reasonably expected to result in a significant injury of the user.
2. A critical component in any component of a life support, device, or system whose failure to perform can be reasonably expected to cause the failure of the life support device or system, or to affect its safety or effectiveness.

ANTI-COUNTERFEITING POLICY

Fairchild Semiconductor Corporation's Anti-Counterfeiting Policy. Fairchild's Anti-Counterfeiting Policy is also stated on our external website, www.fairchildsemi.com, under Sales Support.

Counterfeiting of semiconductor parts is a growing problem in the industry. All manufacturers of semiconductor products are experiencing counterfeiting of their parts. Customers who inadvertently purchase counterfeit parts experience many problems such as loss of brand reputation, substandard performance, failed applications, and increased cost of production and manufacturing delays. Fairchild is taking strong measures to protect ourselves and our customers from the proliferation of counterfeit parts. Fairchild strongly encourages customers to purchase Fairchild parts either directly from Fairchild or from Authorized Fairchild Distributors who are listed by country on our web page cited above. Products customers buy either from Fairchild directly or from Authorized Fairchild Distributors are genuine parts, have full traceability, meet Fairchild's quality standards for handling and storage and provide access to Fairchild's full range of up-to-date technical and product information. Fairchild and our Authorized Distributors will stand behind all warranties and will appropriately address any warranty issues that may arise. Fairchild will not provide any warranty coverage or other assistance for parts bought from Unauthorized Sources. Fairchild is committed to combat this global problem and encourage our customers to do their part in stopping this practice by buying direct or from authorized distributors.

PRODUCT STATUS DEFINITIONS

Definition of Terms

Datasheet Identification	Product Status	Definition
Advance Information	Formative / In Design	Datasheet contains the design specifications for product development. Specifications may change in any manner without notice.
Preliminary	First Production	Datasheet contains preliminary data; supplementary data will be published at a later date. Fairchild Semiconductor reserves the right to make changes at any time without notice to improve design.
No Identification Needed	Full Production	Datasheet contains final specifications. Fairchild Semiconductor reserves the right to make changes at any time without notice to improve the design.
Obsolete	Not In Production	Datasheet contains specifications on a product that is discontinued by Fairchild Semiconductor. The datasheet is for reference information only.

Rev. I61

ON Semiconductor and ON are trademarks of Semiconductor Components Industries, LLC dba ON Semiconductor or its subsidiaries in the United States and/or other countries. ON Semiconductor owns the rights to a number of patents, trademarks, copyrights, trade secrets, and other intellectual property. A listing of ON Semiconductor's product/patent coverage may be accessed at www.onsemi.com/site/pdf/Patent−Marking.pdf. ON Semiconductor reserves the right to make changes without further notice to any products herein. ON Semiconductor makes no warranty, representation or guarantee regarding the suitability of its products for any particular purpose, nor does ON Semiconductor assume any liability arising out of the application or use of any product or circuit, and specifically disclaims any and all liability, including without limitation special, consequential or incidental damages. Buyer is responsible for its products and applications using ON Semiconductor products, including compliance with all laws, regulations and safety requirements or standards, regardless of any support or applications information provided by ON Semiconductor. "Typical" parameters which may be provided in ON Semiconductor data sheets and/or specifications can and do vary in different applications and actual performance may vary over time. All operating parameters, including "Typicals" must be validated for each customer application by customer's technical experts. ON Semiconductor does not convey any license under its patent rights nor the rights of others. ON Semiconductor products are not designed, intended, or authorized for use as a critical component in life support systems or any FDA Class 3 medical devices or medical devices with a same or similar classification in a foreign jurisdiction or any devices intended for implantation in the human body. Should Buyer purchase or use ON Semiconductor products for any such unintended or unauthorized application, Buyer shall indemnify and hold ON Semiconductor and its officers, employees, subsidiaries, affiliates, and distributors harmless against all claims, costs, damages, and expenses, and reasonable attorney fees arising out of, directly or indirectly, any claim of personal injury or death associated with such unintended or unauthorized use, even if such claim alleges that ON Semiconductor was negligent regarding the design or manufacture of the part. ON Semiconductor is an Equal Opportunity/Affirmative Action Employer. This literature is subject to all applicable copyright laws and is not for resale in any manner.

PUBLICATION ORDERING INFORMATION

LITERATURE FULFILLMENT:
Literature Distribution Center for ON Semiconductor
19521 E. 32nd Pkwy, Aurora, Colorado 80011 USA
Phone: 303−675−2175 or 800−344−3860 Toll Free USA/Canada
Fax: 303−675−2176 or 800−344−3867 Toll Free USA/Canada
Email: orderlit@onsemi.com

N. American Technical Support: 800−282−9855 Toll Free USA/Canada
Europe, Middle East and Africa Technical Support:
Phone: 421 33 790 2910
Japan Customer Focus Center
Phone: 81−3−5817−1050

ON Semiconductor Website: **www.onsemi.com**

Order Literature: http://www.onsemi.com/orderlit

For additional information, please contact your local Sales Representative