| REV. | MODIFICATION. | DATE | DRN |
|---|---|---|---|
| 01 | PRODUCTION RELEASE | 26/09/08 | MT |
| 02 | CO2010436 | 10/10/08 | MT |

| Standard Material: UL94 V2 Nylon 6/6, RMS-01 Color: Natural | Figure | Min. Loop Tensile Strength kg (lb) | "L" Length Ref. | Max. Bundle Diameter | "W" Width | Mounting Hole Diameter | Panel Thickness | Color & Material Variations Suffix: UL94 V0 Nylon 6/6, RMS-19 Color: Natural | UL94 V2 Nylon 6/6, RMS-01 Color: Black | High Temperature Nylon 4/6, RMS-109 Color: Natural | UV Stabilized Nylon 6/6, RMS-46A Color: Black |
|---|---|---|---|---|---|---|---|---|---|---|---|
| | | | | | | | | Replace -01 with -V0 | Add BK | Add -HT | Add -UVB |
| WIT-18RA-01 | 1 | 8 [18] | 109 [4.29] | 21 [.83] | 2.5 [.10] | 4.8 [.19] | 1.6 [.06] | - | SPECIAL | - | SPECIAL |
| WIT-50SA-01 | | 22 [50] | 133 [5.24] | 23 [.91] | 4.8 [.19] | 6.4 [.25] | | SPECIAL | | SPECIAL | |
| WIT-50SRA-01 | | | 173 [6.81] | 36 [1.42] | | | | | | | |
| WIT-50RA-01 | | | 198 [7.80] | 43 [1.69] | | | | | | | |
| WIT-50SA-1-01 | 2 | | 133 [5.24] | 23 [.91] | | 6.4 - 6.8 [.25 - .27] | 0.8 - 2 [.03 - .08] | | | | |
| WIT-50SRA-1-01 | | | 173 [6.81] | 36 [1.42] | | | | | | | |
| WIT-50RA-1-01 | | | 198 [7.80] | 43 [1.69] | | | | | | | |

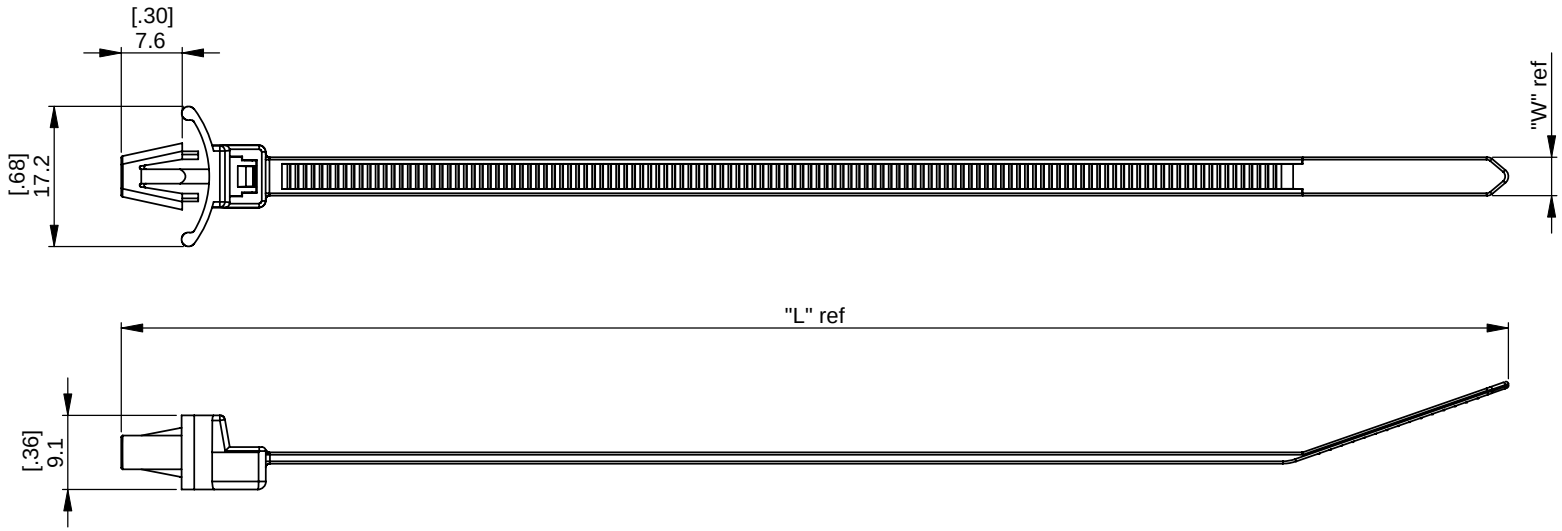


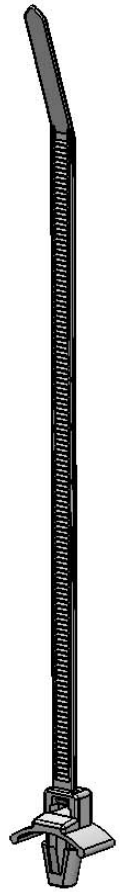

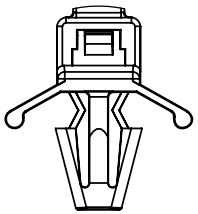

FIGURE-1

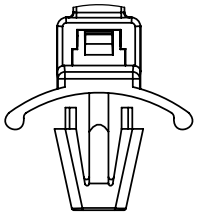

FIGURE-2

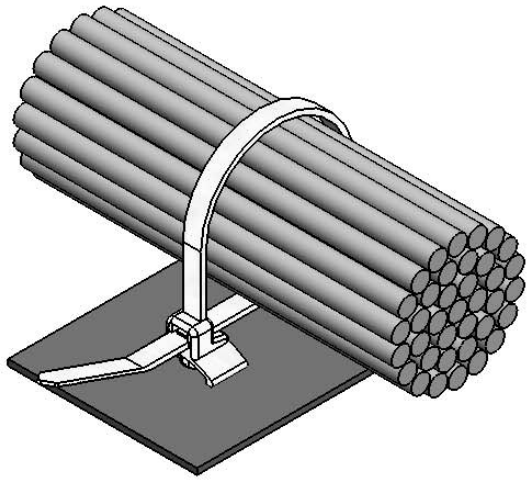

*INFORMATION CONTAINED IN THIS DOCUMENT IS CONFIDENTIAL TO RICHCO INTERNATIONAL Co. Ltd. AND MAY NOT BE DISCLOSED OR REPRODUCED IN WHOLE OR PART WITHOUT THEIR WRITTEN CONSENT.*

Richco

ALL DIMENSIONS IN mm
GENERAL TOLERANCES ±0.25
UNLESS OTHERWISE STATED
1 DECIMAL PLACE ±0.25
2 DECIMAL PLACES ± 0.10
ANGULAR ±1°

THIRD ANGLE

| | |
|---|---|
| MATERIAL: NYLON 6/6 UL94 V-2 (RMS-01) | COLOUR: NATURAL |
| DESCRIPTION: WIT ARROWHEAD TIES | PART No: SEE TABLE |
| DRG No: 08-100 / NPR No: NPR2007-458 IT08-0011 | Mass:(g) / SHEET SIZE A3 |
| DRN MT / DATE 26/09/08 / CHKD JK / DATE 26/09/08 | SCALE NTS / SHEET No. 1 OF 1 |

FORM No. 0178/00

# Mouser Electronics

Authorized Distributor

Click to View Pricing, Inventory, Delivery & Lifecycle Information:

Essentra:

WIT-18RA-01 WIT-50RA-1-01 WIT-50SA-01 WIT-50SA-1-01 WIT-50SRA-01 WIT-50SRA-1-01 WIT-50RA-01