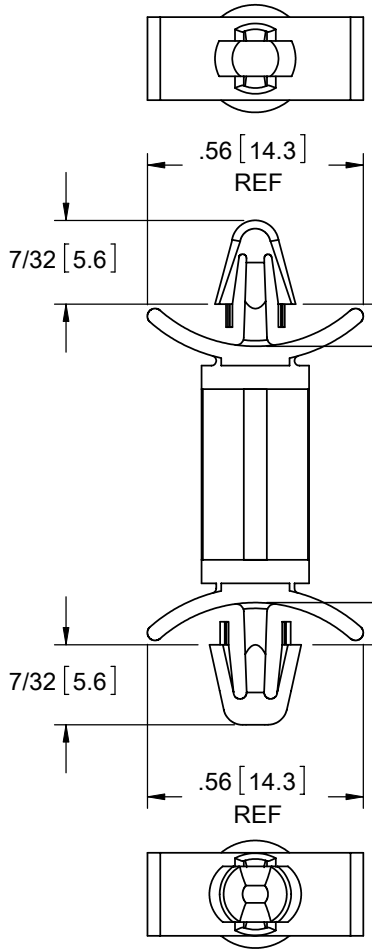

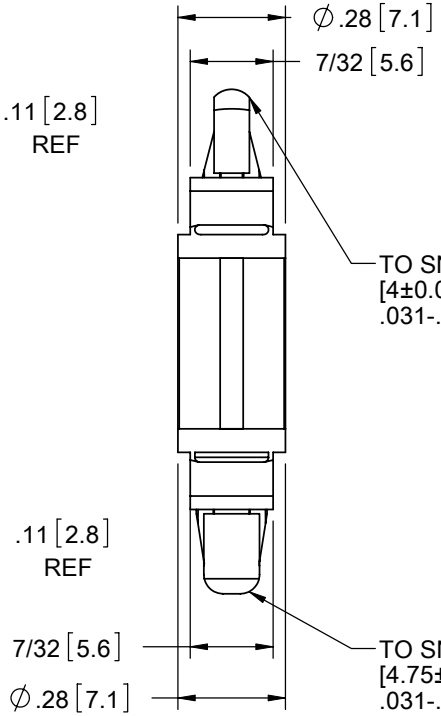

TO SNAP-LOCK IN A .156±.003
[4±0.08] DIA. HOLE, IN A
.031-.078 [0.79-1.98] PANEL THICKNESS

TO SNAP-LOCK IN A .187±.003
[4.75±0.08] DIA. HOLE, IN A
.031-.078 [0.79-1.98] PANEL THICKNESS

MATERIAL: NYLON 6/6 UL 94 V-2 (RMS-01) COLOR: NATURAL PART NO.	MATERIAL: NYLON 6/6 UL 94 V-0 (RMS-19) COLOR: NATURAL PART NO.	DIM. "A"±.015 [0.4]
DLCBS3-3-01	DLCBS3-3-19	3/16 [4.8]
DLCBS3-4-01	DLCBS3-4-19	1/4 [6.4]
DLCBS3-6-01	DLCBS3-6-19	3/8 [9.5]
DLCBS3-8-01	DLCBS3-8-19	1/2 [12.7]
DLCBS3-10-01	DLCBS3-10-19	5/8 [15.9]
DLCBS3-12-01	DLCBS3-12-19	3/4 [19.1]
DLCBS3-14-01	DLCBS3-14-19	7/8 [22.2]

NOTES:
1. MATERIAL: NYLON 6/6 UL 94 HB (RMS-73)
   COLOR: NATURAL.
   AVAILABLE BY SPECIAL ORDER ONLY.
   TO ORDER USE P/N DLCBS3-X-73
2. MATERIAL; NYLON 6/6, UL 94 V-0, UV STABILIZED, (RMS-46)
   COLOR: BLACK.
   AVAILABLE BY SPECIAL ORDER ONLY.
   TO ORDER USE P/N: DLCBS3-X-UVB
3. ALTERNATE UNITS FOR REFERENCE ONLY.

AVAILABLE BY SPECIAL ORDER- NAFTA REGION ONLY

REV.	DESCRIPTION	ENGR.	DATE
G	REDRAWN, SEE ECN #1208 FOR CHANGES	SK	11/29/06
-	SEE ENGINEERING FOR REVISIONS A-F	---	------

TITLE: DUAL LOCKING CIRCUIT BOARD SUPPORT, TYPE 3

DWG IN IN [MM]

CREATED USING SOLIDWORKS

TOLERANCES UNLESS NOTED
.XX=±.010
.XXX=±.005
FRAC.=±1/64
ANG.=±1°

FILE #: DLCBS3 | DWN: SK | APP: RT | FINAL

SHEET: 1 OF 1 | SHEET SIZE: A | DT: 11/27/06 | CHKD: SJ

RE: RICHCO, INC.

RICHCO, INC.
ENG@RICHCO-INC.COM
(773) 539-4060

PART # SEE TABLE

PRINT TYPE CA

Mouser Electronics

Authorized Distributor

Click to View Pricing, Inventory, Delivery & Lifecycle Information:

Essentra:

DLCBS3-4-19 DLCBS3-6-01 DLCBS3-6-19 DLCBS3-8-01 DLCBS3-8-19 DLCBS3-12-19 DLCBS3-14-01 DLCBS3-14-19 DLCBS3-3-01 DLCBS3-3-19 DLCBS3-4-01 DLCBS3-10-01 DLCBS3-10-19 DLCBS3-12-01