| PART NO. | "A"±0.4 |
|---|---|
| CRLCBSK-2-8-01 | 7.5 mm |
| CRLCBSK-2-8A-01 | 8.0 mm |
| CRLCBSK-2-10-01 | 10.0 mm |
| CRLCBSK-2-12-01 | 12.0 mm |
| CRLCBSK-2-14-01 | 14.0 mm |

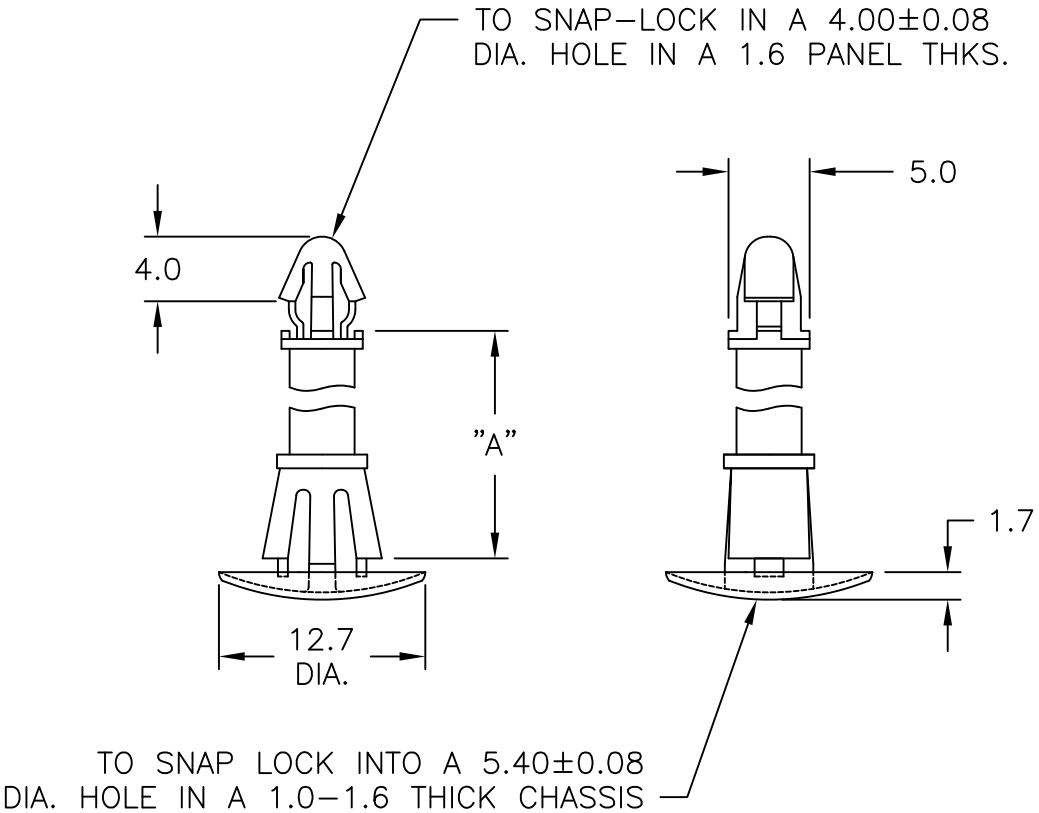


NOTES:
1. MATERIAL: NYLON 6/6 (RMS-01).
   COLOR: NATURAL.
2. FLAME RETARDANT NYLON (RMS-19),
   AVAILABLE BY SPECIAL ORDER ONLY.

| REV | DESCRIPTION | ENGR | DATE |
|---|---|---|---|
| C | CORRECTED -8 & ADDED -8A, ECN # 1444 | DZ | 12.21.18 |
| B | UPDATED PRINT | SM | 02.07.02 |
| A | ADDED NOTE 2. & CHANGED FILE NUMBER | SM | 09.04.01 |

TITLE: CUPPED REVERSE LOCKING CIRCUIT BOARD SUPPORT (METRIC)

DWG IN METRIC

TOLERANCES UNLESS NOTED
X.X=±0.25
X.XX=±0.13
ANG=±1°

FILE # CRLCBSK-2
MAT'L: SEE NOTES
RE: –

DWN: J.B.
DT: 12-18-96
APP:
DT:

ESSENTRA COMPONENTS

FINAL

PART # SEE TABLE

PRINT TYPE CA

# Mouser Electronics

Authorized Distributor

Click to View Pricing, Inventory, Delivery & Lifecycle Information:

Essentra:

CRLCBSK-2-10-01 CRLCBSK-2-12-01 CRLCBSK-2-14-01 CRLCBSK-2-8-01