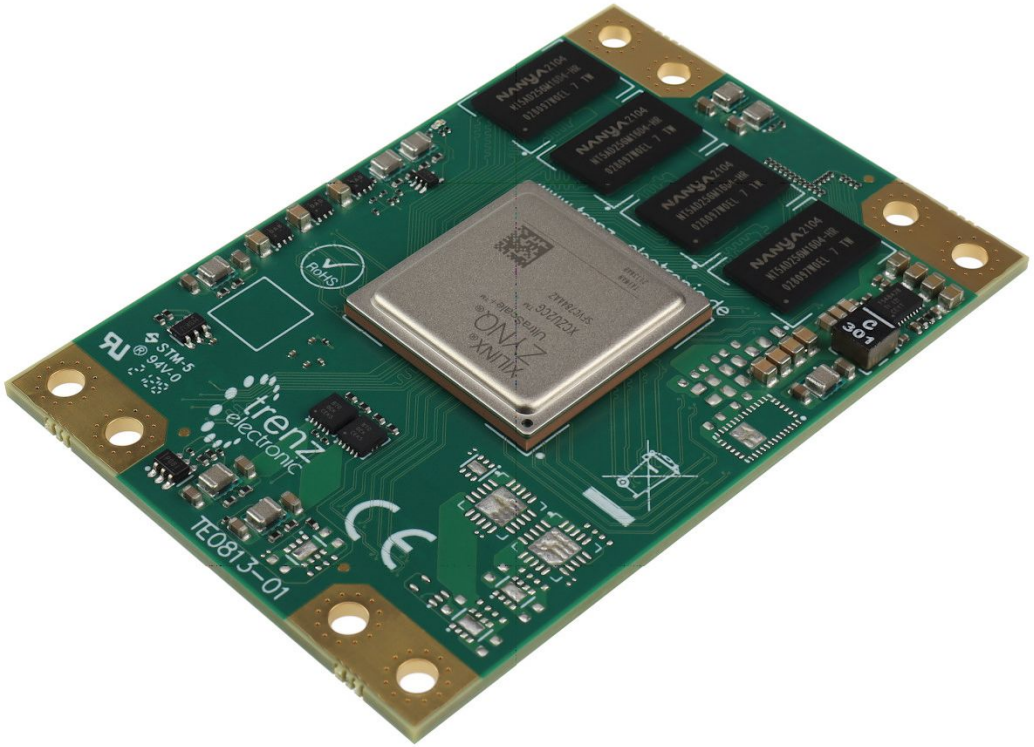

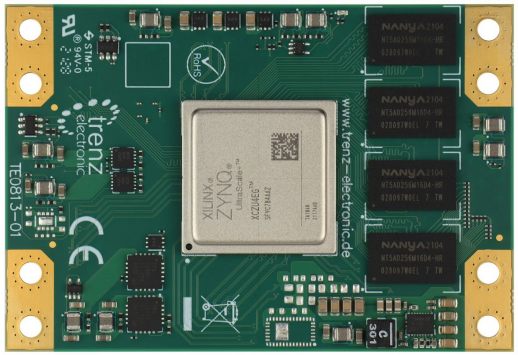

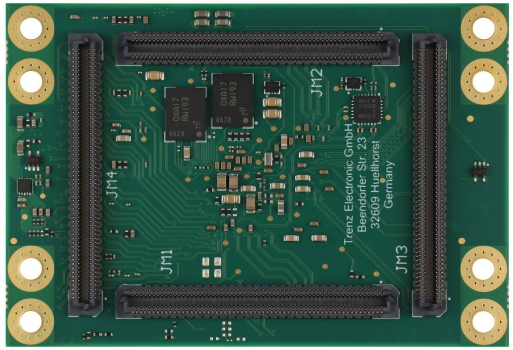

Regarding the usage of our schematics and alike documentation for Trenz module TE0813.
Project is protected under copyright and we strongly and strictly prohibit the reverse engineering or recreation,
even if the design is just adapted or modified.
TE0813 is protected under such right and in case of plagiarism we will have to do anything necessary in order to protect our assets.
Schematics and other handouts serve for informational purposes only!

Drawn by	ED	Title:	TE0813 - Legal Notices
Checked by	MR	A4	Number: TE0813 4DE81-A — Rev. 02
Assembly variant	4DE81-A	Date: 14.06.2023	Copyright: Trenz Electronic GmbH — Page 1 of 30
Created by	ED	Filename:	Legal Notices Modules.SchDoc
Modified by	ED		
Modified at	2023-05-17		

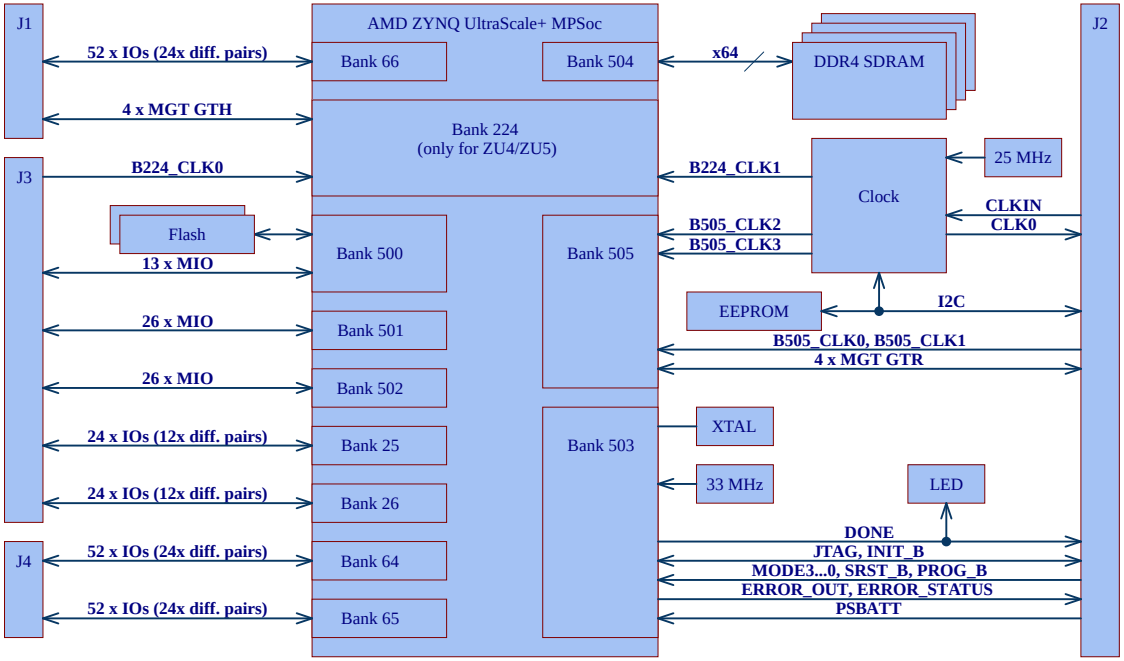

Supported Voltage Ranges:

Power Rail	Direction	Range	Tolerance	Description	Note
3.3VIN	IN	3.3V	+/- 5 %	Micromodule Power	Management voltage rail, supplied by power rail
PL_DCIN	IN	3.3V	+/- 5 %	Micromodule Power	Programmable Logic, supplied by power rail
LP_DCDC	IN	3.3V	+/- 3 %	Micromodule Power	Low-Power Domain, supplied by power rail
GT_DCDC	IN	3.3V	+/- 3 %	Micromodule Power	GTH Transceiver, supplied by power rail
DCDCIN	IN	3.3V	+/- 5 %	Micromodule Power	Full-Power Domain and GTR, supplied by power rail
VCCO_64	IN	1.0 V - 1.8 V	+/- 3 %	HP IO Bank 64	Supplied by external power rail via B2B connector
VCCO_65	IN	1.0 V - 1.8 V	+/- 3 %	HP IO Bank 65	Supplied by external power rail via B2B connector
VCCO_66	IN	1.0 V - 1.8 V	+/- 3 %	HP IO Bank 66	Supplied by external power rail via B2B connector
VCCO_25	IN	1.2 V - 3.3 V	+/- 3 %	HD IO Bank 25	Supplied by external power rail via B2B connector
VCCO_26	IN	1.2 V - 3.3 V	+/- 3 %	HD IO Bank 26	Supplied by external power rail via B2B connector
PSBATT	IN	1.2 V - 1.5 V	-	RTC / BBRAM	Supplied by external power rail via B2B connector
PL_1V8	OUT	1.8 V	+/- 3 %	Power for Carrier	Micromodule: Programmable Logic
PS_1V8	OUT	1.8 V	+/- 3 %	Power for Carrier	Micromodule: Processing System
DDR_1V2	OUT	1.2 V	+/- 3 %	Power for Carrier	Micromodule: PS DDR I/O Supply

I2C Address:

Device	I2C ADDR	Note
PLL U5	0x70	-
EEPROM U28	0x50	-

TE0813	DDR4-TERM	ZU_PS_POWER	ZU_POWER
POWER	POWER_1	POWER_2	POWER_3

trenz electronic	Title: TE0813 - System Overview		
A4	Number: TE0813 4DE81-A		Rev. 02
Date: 14.06.2023	Copyright: Trenz Electronic GmbH		Page 2 of 30
	Filename: TE0813-Overview.SchDoc		

REV	DATE	Description	
-01	2021-05	Initial revision	VT
	2022-03	Added Table with Supported Voltage Ranges	
	2022-05	Changed DCDC U4 TPS548A28 to MPQ8633BGLE-Z Changed C92 100nF to 1nF	
	2022-11	Added additional Info about Voltage Range	
-02	2023-07	1. Change DCDC U11 from EN6347QI to MPM3860GQW-Z and adapted according circuits. 2. Connected DDR4-TEN signals together for U2, U3, U9, and U12 and pulled them low via 499 Ohm resistor R131. Added a testpoint TP3 for DDR4-TEN. 3. Changed voltage rail from 1.35 V to 1.45 V via adapting voltage divider resistors R33 and R38 and changed according voltage rail name PL_GT_1V35 to PL_GT_1V45. 4. Changed voltage rail from 1.05 V to 1.15 V via adaption voltage divider resistors R44 and R46 and changed according rail name PL_GT_1V05 to PL_GT_1V15. 5. Added diode D2 between U41 pin 3 net MR and voltage rail 3.3VIN. 6. Connected enable signal for U11 and U33 from "3.3VIN" to "PG_PL_VCCINT". 7. Added capacitors C137, C147, and C148 for VTT voltage rail. 8. Added resistors R132 (default: not fitted) and R133 to supply U4 VCC either from "PL_DCIN" or from "3.3VIN". 9. Change resistor R92 from 4.22 kOhm to 9.09 kOhm to set current limit to nearly 14.5 A for U4. 10. Added remote sense option: 10.1 R134 for U30 10.2 R135 for U29 10.3 R136 for U31 11. Added decoupling capacitors: 11.1 C210 and C211 for U5. 11.2 C190 for U7. 11.3 C198, C199, and C213 for U8. 11.4 C153, C170...172 for U9 11.5 C196 C197, and C212 for U10. 11.6 C156 and C157 for U12 11.7 C207 and C208 for U14. 11.8 C189 for U17. 11.9 C149...152, C205, and C206 for U18 11.10 C209 and C217 for U21. 11.11 C214...216 for U22. 11.12 C154 and C155 for U24 11.13 C188 and C191 for U26. 11.14 C187 and C195 for U27. 11.15 C203 and C204 for U34. 11.16 C201 for U39. 11.17 C202 for U40. 11.18 C178 for U41. 11.19 C200 for U44. 12. Added testpoints TP4, TP19, TP26. 13. Added UKCA logo. 14. Change 100 nF capacitors C135 and C136 from 6.3 V to 25 V for BOM optimization.	ED

trenz electronic	Title: TE0813 - Revision History		
A4	Number: TE0813 4DE81-A		Rev. 02
Date: 12.06.2023	Copyright: Trenz Electronic GmbH		Page 3 of 30
Filename: Revision Changes.SchDoc			

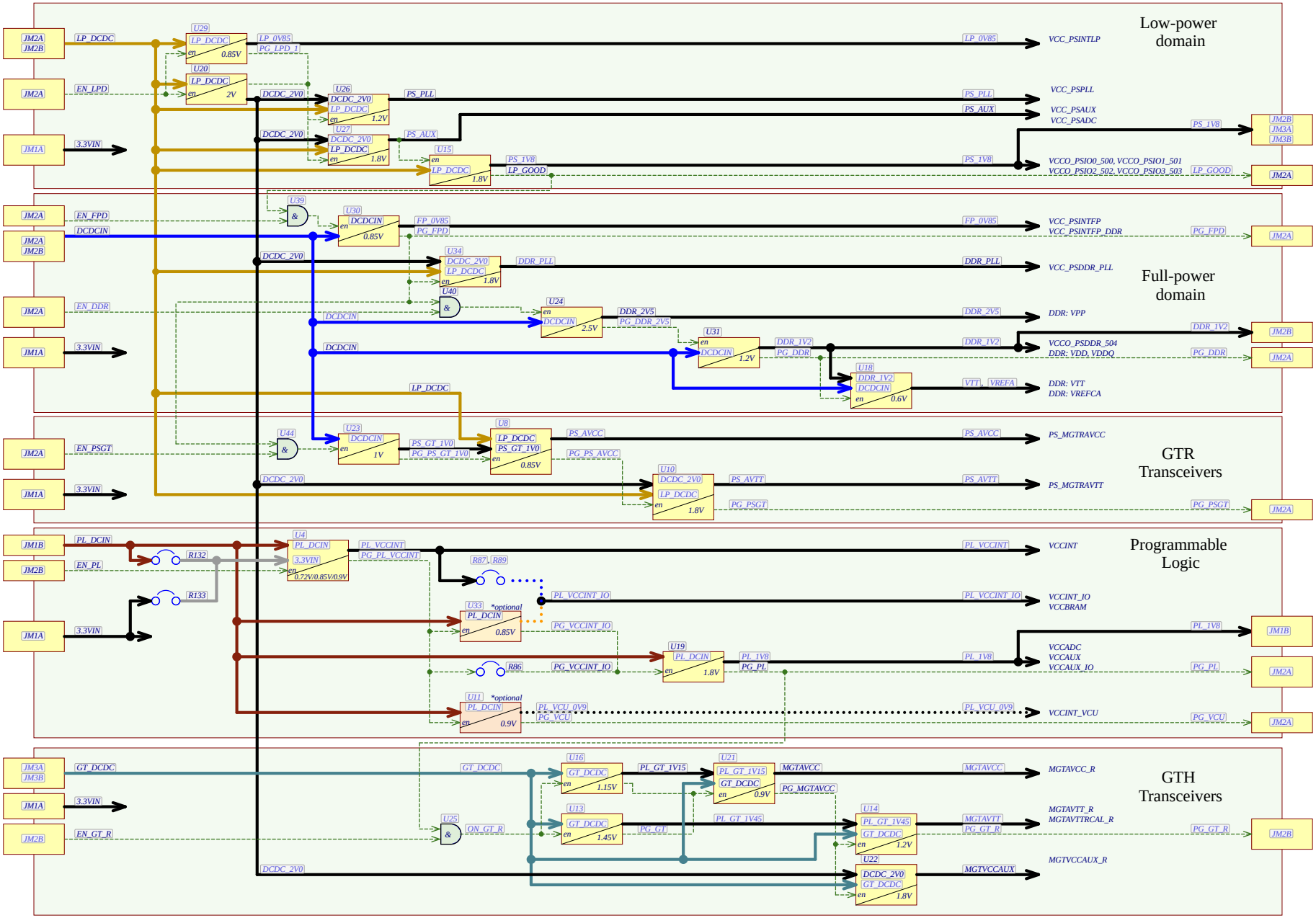

Title: TE0813 - Power Diagram			
A3	Nummer: TE0813 4DE81-A		Rev. 02
Datum: 2021-01-19	Copyright:Trenz Electronic GmbH		Page 4 of 30
Filename: Power_Diagram.SchDoc			

Special notes:

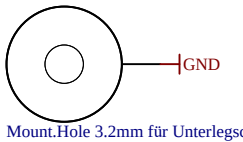

Mount.Hole 3.2mm für Unterlegscheibe

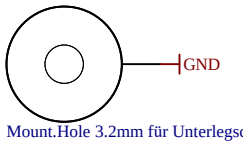

Mount.Hole 3.2mm für Unterlegscheibe

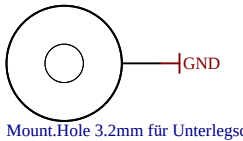

Mount.Hole 3.2mm für Unterlegscheibe

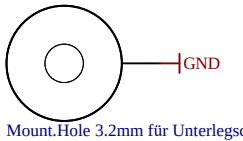

Mount.Hole 3.2mm für Unterlegscheibe

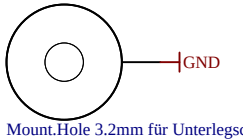

Mount.Hole 3.2mm für Unterlegscheibe

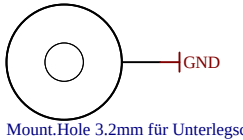

Mount.Hole 3.2mm für Unterlegscheibe

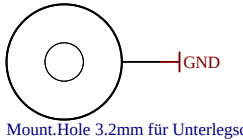

Mount.Hole 3.2mm für Unterlegscheibe

Mount.Hole 3.2mm für Unterlegscheibe

PM1

FIDU-DOT - mini

PM2

FIDU-DOT - mini

PM3

FIDU-DOT - mini

PM4

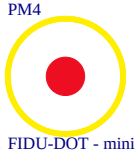

FIDU-DOT - mini

PM5

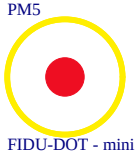

FIDU-DOT - mini

PM6

FIDU-DOT - mini

UKCA1

UKCA Logo on Top Overlay

UKCA-TOPOVERLAY

CE1

CE Logo on Top Overlay

CE-TOPOVERLAY

MECH1

TE Address Overlay

LOGO ADDRESS

LOGO1

TE Logo PRINT Layer

LOGO PRINT

Serial

Serial

Serialnumber 6,3 x 6.3mm

trenz electronic	Title: TE0813		
	A4	Number: TE0813 4DE81-A	Rev. 02
	Date: 13.06.2023	Copyright: Trenz Electronic GmbH	Page 5 of 30
	Filename: TE0813.SchDoc		

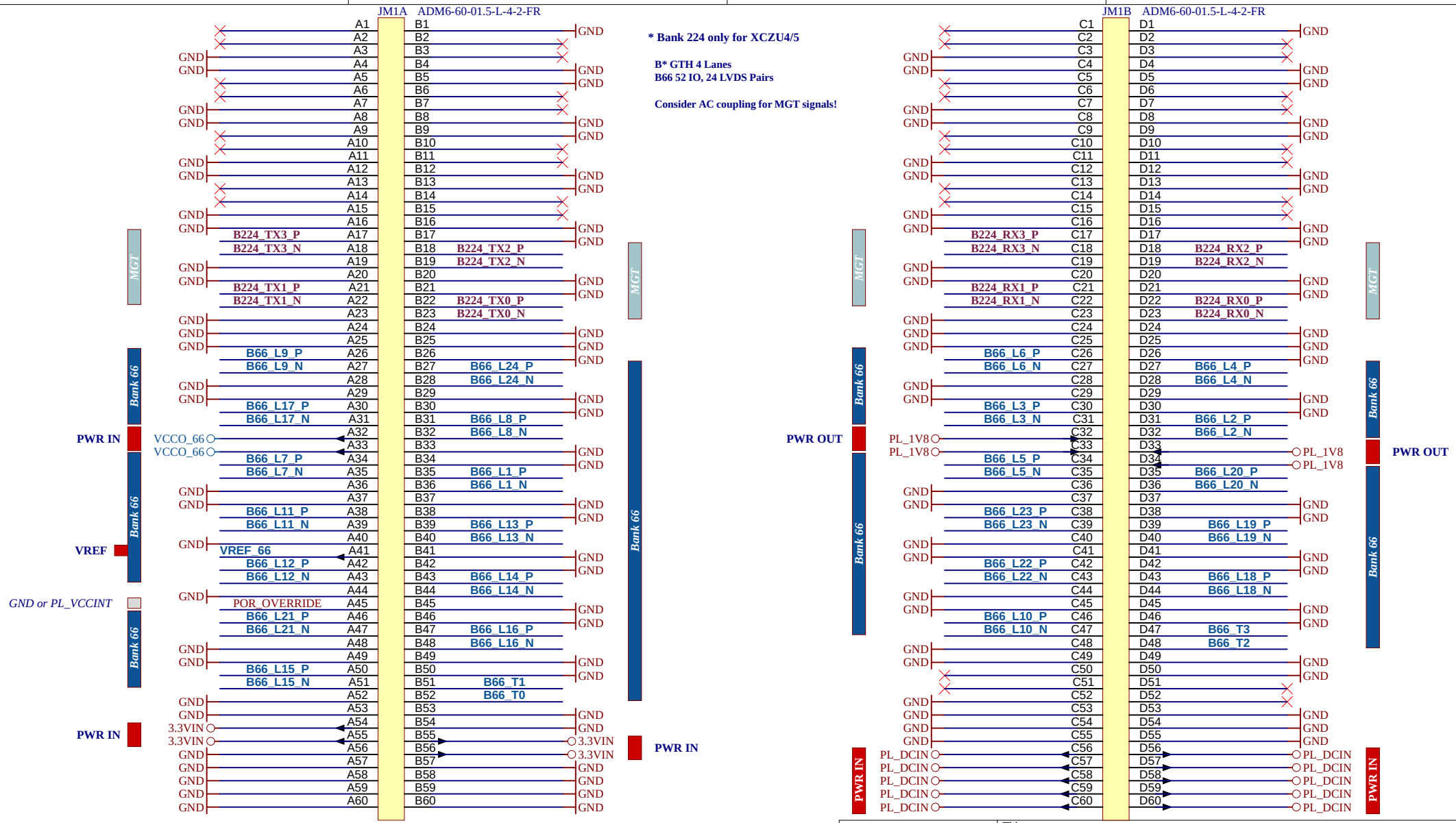

Title: TE0813 - Connector J1			
A4	Number: TE0813 4DE81-A		Rev. 02
Date: 14.06.2023	Copyright: Trenz Electronic GmbH		Page 6 of 30
Filename: J1.SchDoc			

JM2A ADM6-60-01.5-L-4-2-FR

Pin	Net	Pin	Net	Dir	Voltage
A1	GND	B1	CLKIN_P		
A2	B505_CLK1_P	B2	CLKIN_N		
A3	B505_CLK1_N	B3			
A4	GND	B4	GND		
A5	GND	B5	B505_CLK0_P		
A6	GND	B6	B505_CLK0_N		
A7		B7			
A8	GND	B8	GND		
A9	GND	B9			
A10		B10			
A11		B11			
A12	GND	B12	GND		
A13	GND	B13			
A14		B14			
A15		B15			
A16	GND	B16	GND		
A17	GND	B17	B505_RX3_N		
A18	B505_RX2_N	B18	B505_RX3_P		
A19	B505_RX2_P	B19			
A20	GND	B20	GND		
A21	GND	B21	B505_RX1_N		
A22	B505_RX0_N	B22	B505_RX1_P		
A23	B505_RX0_P	B23			
A24	GND	B24	GND		
A25	GND	B25			
A26		B26			
A27		B27			
A28	GND	B28	GND		
A29	GND	B29	PG_PSGT	Out	0 V ... 3.3 V
A30		B30	PROG_B	In	0 V ... 1.8 V
A31	ERR_OUT (Out, 0 V ... 1.8 V)	B31			
A32	GND	B32	GND		
A33	GND	B33	SRST_B	In	0 V ... 1.8 V
A34	ERR_STATUS (Out, 0 V ... 1.8 V)	B34	INIT_B	In/Out	0 V ... 1.8 V
A35	LP_GOOD (Out, 0 V ... 3.3 V)	B35			
A36	PLL_SCL (In, 0 V ... 1.8 V)	B36	GND		
A37	PLL_SDA (In/Out, 0 V ... 1.8 V)	B37	PG_PL	Out	0 V ... 3.3 V
A38		B38	EN_FPD	In	0 V ... 3.3 V
A39	GND	B39			
A40	PG_VCU (Out, 0 V ... 3.3 V)	B40	GND		
A41	EN_PSGT (In, 0 V ... 3.3 V)	B41	PG_FPD	Out	0 V ... 3.3 V
A42		B42	EN_LPD	In	0 V ... 3.3 V
A43	GND	B43			
A44	TCK (0 V ... 1.8 V)	B44	GND		
A45	TDI (0 V ... 1.8 V)	B45	PG_DDR		
A46	TDO (0 V ... 1.8 V)	B46	DONE	Out	0 V ... 1.8 V
A47	TMS (0 V ... 1.8 V)	B47	EN_DDR	In	0 V ... 3.3 V
A48	GND	B48	GND		
A49	GND	B49	GND		
A50	LP_DCDC	B50	LP_DCDC		
A51	LP_DCDC	B51	LP_DCDC		
A52	LP_DCDC	B52	LP_DCDC		
A53	GND	B53	GND		
A54	GND	B54	GND		
A55	GND	B55	GND		
A56	GND	B56	GND		
A57	DCDCIN	B57	DCDCIN		
A58	DCDCIN	B58	DCDCIN		
A59	DCDCIN	B59	DCDCIN		
A60	DCDCIN	B60	DCDCIN		

JTAG I2C
PLL CLK IN
PLL CLK OUT
GTR 2 CLK IN
GTR 4 Lanes

Consider AC coupling for MGT signals!

JM2B ADM6-60-01.5-L-4-2-FR

Pin	Net	Pin	Net	Dir	Voltage
C1	GND	D1	CLK0_N		
C2		D2	CLK0_P		
C3		D3			
C4	GND	D4	GND		
C5	GND	D5			
C6		D6			
C7		D7	GND		
C8	GND	D8	GND		
C9	GND	D9			
C10		D10			
C11		D11	GND		
C12	GND	D12	GND		
C13	GND	D13			
C14		D14			
C15		D15	GND		
C16	GND	D16	GND		
C17	GND	D17	B505_TX3_N		
C18	B505_TX2_N	D18	B505_TX3_P		
C19	B505_TX2_P	D19			
C20	GND	D20	GND		
C21	GND	D21	B505_TX1_N		
C22	B505_TX0_N	D22	B505_TX1_P		
C23	B505_TX0_P	D23	GND		
C24	GND	D24	GND		
C25	GND	D25			
C26		D26			
C27		D27	GND		
C28	GND	D28	GND		
C29	GND	D29			
C30		D30			
C31	MR (In, 0 V ... 3.3 V)	D31			
C32		D32			
C33		D33	PG_GT_R	Out	0 V ... 3.3 V
C34	PS_1V8 (PWR OUT)	D34	PS_1V8 (PWR OUT)		
C35	EN_PL (In, 0 V ... 3.3 V)	D35	GND		
C36	EN_GT_R (In, 0 V ... 3.3 V)	D36	GND		
C37		D37	PSBATT		1.2 V ... 1.5 V
C38		D38	PUDC_B		0 V ... 1.8 V
C39	GND	D39	GND		
C40	GND	D40	GND		
C41		D41	V_P	In	
C42		D42	V_N	In	
C43	GND	D43	GND		
C44	MODE3 (In, 0 V ... 1.8 V)	D44	GND		
C45	MODE2 (In, 0 V ... 1.8 V)	D45	DX_P		
C46	MODE1 (In, 0 V ... 1.8 V)	D46	DX_N		
C47	MODE0 (In, 0 V ... 1.8 V)	D47	DDR_1V2		PWR OUT
C48	GND	D48	GND		
C49	GND	D49	GND		
C50	LP_DCDC	D50	LP_DCDC		
C51	LP_DCDC	D51	LP_DCDC		
C52	LP_DCDC	D52	LP_DCDC		
C53	GND	D53	GND		
C54	GND	D54	GND		
C55	GND	D55	GND		
C56	GND	D56	GND		
C57	DCDCIN	D57	DCDCIN		
C58	DCDCIN	D58	DCDCIN		
C59	DCDCIN	D59	DCDCIN		
C60	DCDCIN	D60	DCDCIN		

Bank 25 / 45 HD	0..VCCO25
Bank 26 / 46 HD	0..VCCO26
Bank 64 HP	0..VCCO64
Bank 65 HP	0..VCCO65
Bank 65 HP	0..VCCO66

GND — TP10 — Testpoint 0.8mm
GND — TP5 — Testpoint 0.8mm
GND — TP15 — Testpoint 0.8mm

trenz electronic

Title: TE0813 - Connector J2

A4	Number: TE0813 4DE81-A	Rev. 02
Date: 14.06.2023	Copyright: Trenz Electronic GmbH	Page 7 of 30
Filename: J2.SchDoc		

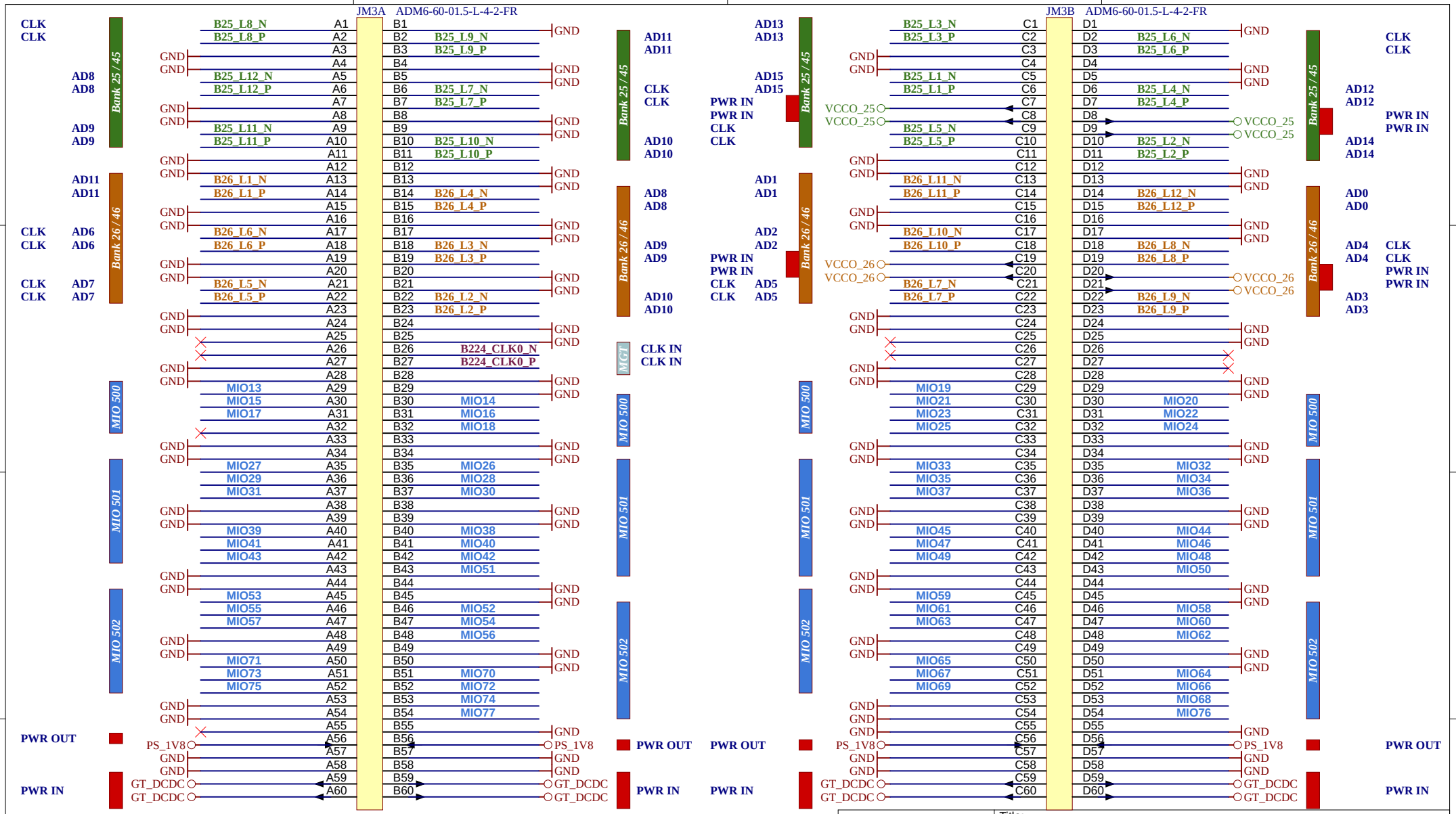
JM3A ADM6-60-01.5-L-4-2-FR
JM3B ADM6-60-01.5-L-4-2-FR
Bank 25 / 45
Bank 26 / 46
MIO 500
MIO 501
MIO 502
MGT
PWR OUT
PWR IN
CLK IN
B25_L8_N A1 B1
B25_L8_P A2 B2 B25_L9_N
A3 B3 B25_L9_P
A4 B4
B25_L12_N A5 B5
B25_L12_P A6 B6 B25_L7_N
A7 B7 B25_L7_P
A8 B8
B25_L11_N A9 B9
B25_L11_P A10 B10 B25_L10_N
A11 B11 B25_L10_P
A12 B12
B26_L1_N A13 B13
B26_L1_P A14 B14 B26_L4_N
A15 B15 B26_L4_P
A16 B16
B26_L6_N A17 B17
B26_L6_P A18 B18 B26_L3_N
A19 B19 B26_L3_P
A20 B20
B26_L5_N A21 B21
B26_L5_P A22 B22 B26_L2_N
A23 B23 B26_L2_P
A24 B24
A25 B25
A26 B26 B224_CLK0_N
A27 B27 B224_CLK0_P
A28 B28
MIO13 A29 B29
MIO15 A30 B30 MIO14
MIO17 A31 B31 MIO16
A32 B32 MIO18
A33 B33
A34 B34
MIO27 A35 B35 MIO26
MIO29 A36 B36 MIO28
MIO31 A37 B37 MIO30
A38 B38
A39 B39
MIO39 A40 B40 MIO38
MIO41 A41 B41 MIO40
MIO43 A42 B42 MIO42
A43 B43 MIO51
A44 B44
MIO53 A45 B45
MIO55 A46 B46 MIO52
MIO57 A47 B47 MIO54
A48 B48 MIO56
A49 B49
MIO71 A50 B50
MIO73 A51 B51 MIO70
MIO75 A52 B52 MIO72
A53 B53 MIO74
A54 B54 MIO77
A55 B55
A56 B56
A57 B57
A58 B58
A59 B59
A60 B60
PS_1V8
GT_DCDC
GND
CLK
AD8
AD9
AD11
AD6
AD7
AD10
AD13
AD15
AD1
AD2
AD5
B25_L3_N C1 D1
B25_L3_P C2 D2 B25_L6_N
C3 D3 B25_L6_P
C4 D4
B25_L1_N C5 D5
B25_L1_P C6 D6 B25_L4_N
C7 D7 B25_L4_P
C8 D8
B25_L5_N C9 D9
B25_L5_P C10 D10 B25_L2_N
C11 D11 B25_L2_P
C12 D12
B26_L11_N C13 D13
B26_L11_P C14 D14 B26_L12_N
C15 D15 B26_L12_P
C16 D16
B26_L10_N C17 D17
B26_L10_P C18 D18 B26_L8_N
C19 D19 B26_L8_P
C20 D20
B26_L7_N C21 D21
B26_L7_P C22 D22 B26_L9_N
C23 D23 B26_L9_P
C24 D24
C25 D25
C26 D26
C27 D27
C28 D28
MIO19 C29 D29
MIO21 C30 D30 MIO20
MIO23 C31 D31 MIO22
MIO25 C32 D32 MIO24
C33 D33
C34 D34
MIO33 C35 D35 MIO32
MIO35 C36 D36 MIO34
MIO37 C37 D37 MIO36
C38 D38
C39 D39
MIO45 C40 D40 MIO44
MIO47 C41 D41 MIO46
MIO49 C42 D42 MIO48
C43 D43 MIO50
C44 D44
MIO59 C45 D45
MIO61 C46 D46 MIO58
MIO63 C47 D47 MIO60
C48 D48 MIO62
C49 D49
MIO65 C50 D50
MIO67 C51 D51 MIO64
MIO69 C52 D52 MIO66
C53 D53 MIO68
C54 D54 MIO76
C55 D55
C56 D56
C57 D57
C58 D58
C59 D59
C60 D60
VCCO_25
VCCO_26
Bank 25 / 45 HD 0..VCCO25
Bank 26 / 46 HD 0..VCCO26
Bank 64 HP 0..VCCO64
Bank 65 HP 0..VCCO65
Bank 65 HP 0..VCCO66
* Bank 25 for XCZU2/3
* Bank 45 for XCZU4/5
** Bank 26 for XCZU2/3
** Bank 46 for XCZU4/5
*** Bank 224 only for XCZU4/5
B* 24 IO, 12 LVDS Pairs
B** 24 IO, 12 LVDS Pairs
B*** GTH 1 CLK IN
65 MIO
trenz electronic
Title: TE0813 - Connector J3
A4
Number: TE0813 4DE81-A
Rev. 02
Date: 14.06.2023
Copyright: Trenz Electronic GmbH
Page 8 of 30
Filename: J3.SchDoc

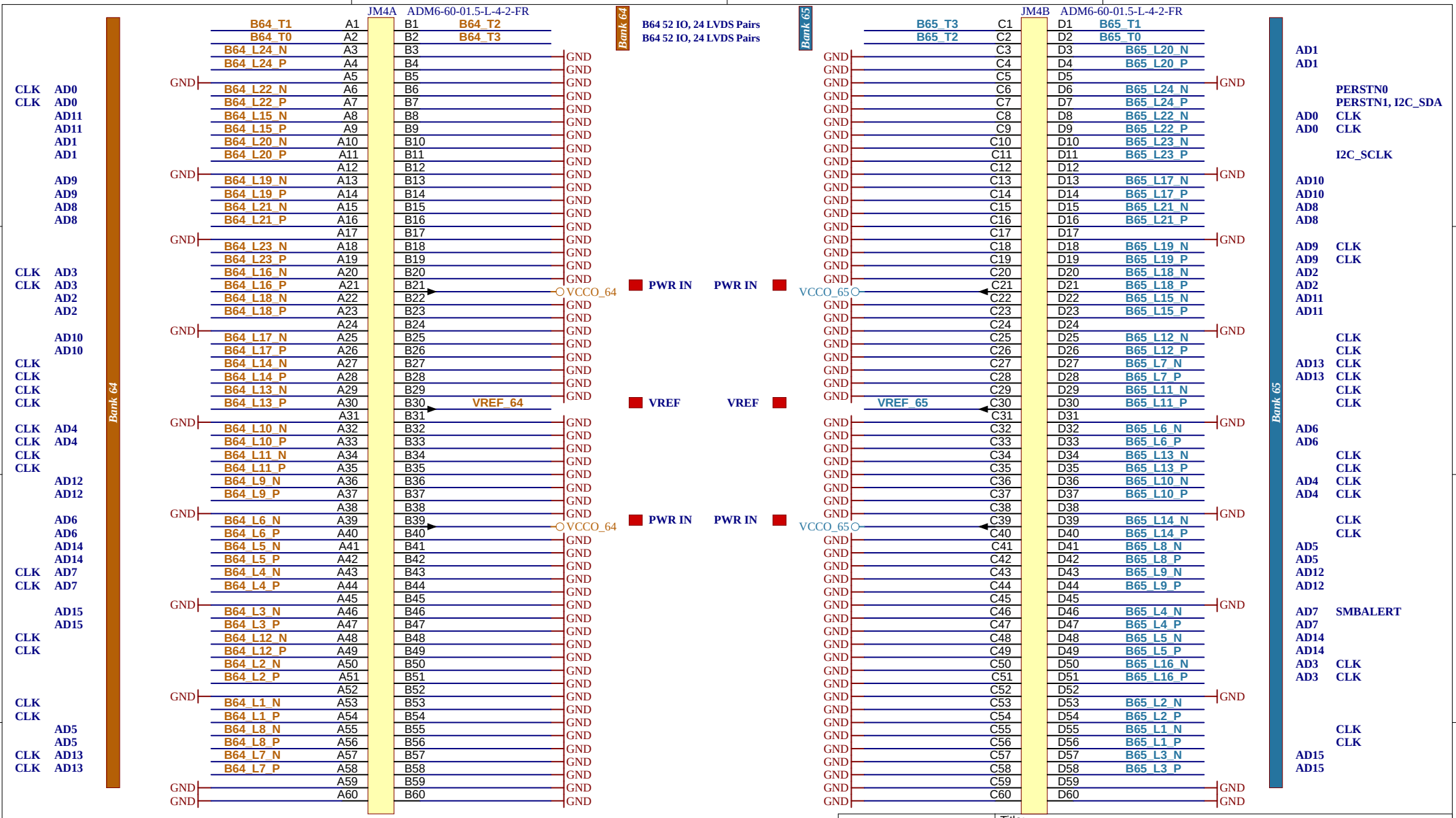
JM4A ADM6-60-01.5-L-4-2-FR
JM4B ADM6-60-01.5-L-4-2-FR
Bank 64
Bank 65
B64 52 IO, 24 LVDS Pairs
B64 52 IO, 24 LVDS Pairs
PWR IN
VREF
VCCO_64
VCCO_65
VREF_64
VREF_65
GND
B64_T1 A1 B1 B64_T2
B64_T0 A2 B2 B64_T3
B64_L24_N A3 B3
B64_L24_P A4 B4
B64_L22_N A6 B6
B64_L22_P A7 B7
B64_L15_N A8 B8
B64_L15_P A9 B9
B64_L20_N A10 B10
B64_L20_P A11 B11
B64_L19_N A13 B13
B64_L19_P A14 B14
B64_L21_N A15 B15
B64_L21_P A16 B16
B64_L23_N A18 B18
B64_L23_P A19 B19
B64_L16_N A20 B20
B64_L16_P A21 B21
B64_L18_N A22 B22
B64_L18_P A23 B23
B64_L17_N A25 B25
B64_L17_P A26 B26
B64_L14_N A27 B27
B64_L14_P A28 B28
B64_L13_N A29 B29
B64_L13_P A30 B30
B64_L10_N A32 B32
B64_L10_P A33 B33
B64_L11_N A34 B34
B64_L11_P A35 B35
B64_L9_N A36 B36
B64_L9_P A37 B37
B64_L6_N A39 B39
B64_L6_P A40 B40
B64_L5_N A41 B41
B64_L5_P A42 B42
B64_L4_N A43 B43
B64_L4_P A44 B44
B64_L3_N A46 B46
B64_L3_P A47 B47
B64_L12_N A48 B48
B64_L12_P A49 B49
B64_L2_N A50 B50
B64_L2_P A51 B51
B64_L1_N A53 B53
B64_L1_P A54 B54
B64_L8_N A55 B55
B64_L8_P A56 B56
B64_L7_N A57 B57
B64_L7_P A58 B58
A59 B59
A60 B60
B65_T3 C1 D1 B65_T1
B65_T2 C2 D2 B65_T0
D3 B65_L20_N
D4 B65_L20_P
D6 B65_L24_N
D7 B65_L24_P
D8 B65_L22_N
D9 B65_L22_P
D10 B65_L23_N
D11 B65_L23_P
D13 B65_L17_N
D14 B65_L17_P
D15 B65_L21_N
D16 B65_L21_P
D18 B65_L19_N
D19 B65_L19_P
D20 B65_L18_N
D21 B65_L18_P
D22 B65_L15_N
D23 B65_L15_P
D25 B65_L12_N
D26 B65_L12_P
D27 B65_L7_N
D28 B65_L7_P
D29 B65_L11_N
D30 B65_L11_P
D32 B65_L6_N
D33 B65_L6_P
D34 B65_L13_N
D35 B65_L13_P
D36 B65_L10_N
D37 B65_L10_P
D39 B65_L14_N
D40 B65_L14_P
D41 B65_L8_N
D42 B65_L8_P
D43 B65_L9_N
D44 B65_L9_P
D46 B65_L4_N
D47 B65_L4_P
D48 B65_L5_N
D49 B65_L5_P
D50 B65_L16_N
D51 B65_L16_P
D53 B65_L2_N
D54 B65_L2_P
D55 B65_L1_N
D56 B65_L1_P
D57 B65_L3_N
D58 B65_L3_P
CLK AD0
CLK AD0
AD11
AD11
AD1
AD1
AD9
AD9
AD8
AD8
CLK AD3
CLK AD3
AD2
AD2
AD10
AD10
CLK
CLK
CLK
CLK
CLK AD4
CLK AD4
CLK
CLK
AD12
AD12
AD6
AD6
AD14
AD14
CLK AD7
CLK AD7
AD15
AD15
CLK
CLK
CLK
CLK
AD5
AD5
CLK AD13
CLK AD13
AD1
AD1
PERSTN0
PERSTN1, I2C_SDA
AD0 CLK
AD0 CLK
I2C_SCLK
AD10
AD10
AD8
AD8
AD9 CLK
AD9 CLK
AD2
AD2
AD11
AD11
CLK
CLK
AD13 CLK
AD13 CLK
CLK
CLK
AD6
AD6
CLK
CLK
AD4 CLK
AD4 CLK
CLK
CLK
AD5
AD5
AD12
AD12
AD7 SMBALERT
AD7
AD14
AD14
AD3 CLK
AD3 CLK
CLK
CLK
AD15
AD15
Bank 25 / 45 HD 0..VCCO25
Bank 26 / 46 HD 0..VCCO26
Bank 64 HP 0..VCCO64
Bank 65 HP 0..VCCO65
Bank 65 HP 0..VCCO66
trenz electronic
Title: TE0813 - Connector J4
A4
Number: TE0813 4DE81-A
Rev. 02
Date: 14.06.2023
Copyright: Trenz Electronic GmbH
Page 9 of 30
Filename: J4.SchDoc

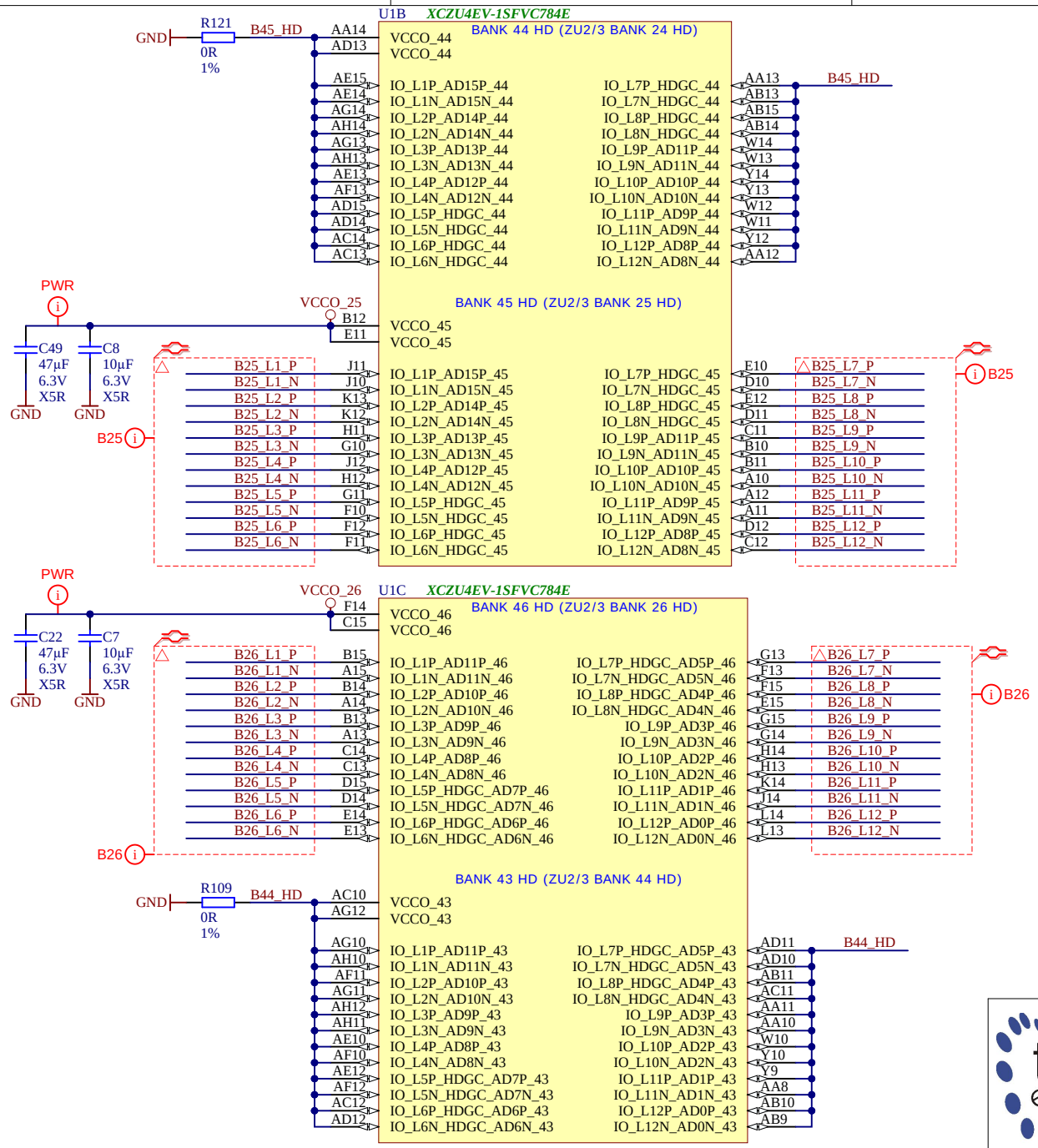

trenz electronic	Title: TE0813 - HD Banks		
A4	Number: TE0813 4DE81-A		Rev. 02
Date: 12.06.2023	Copyright: Trenz Electronic GmbH		Page 10 of 30
Filename: B_HD.SchDoc			

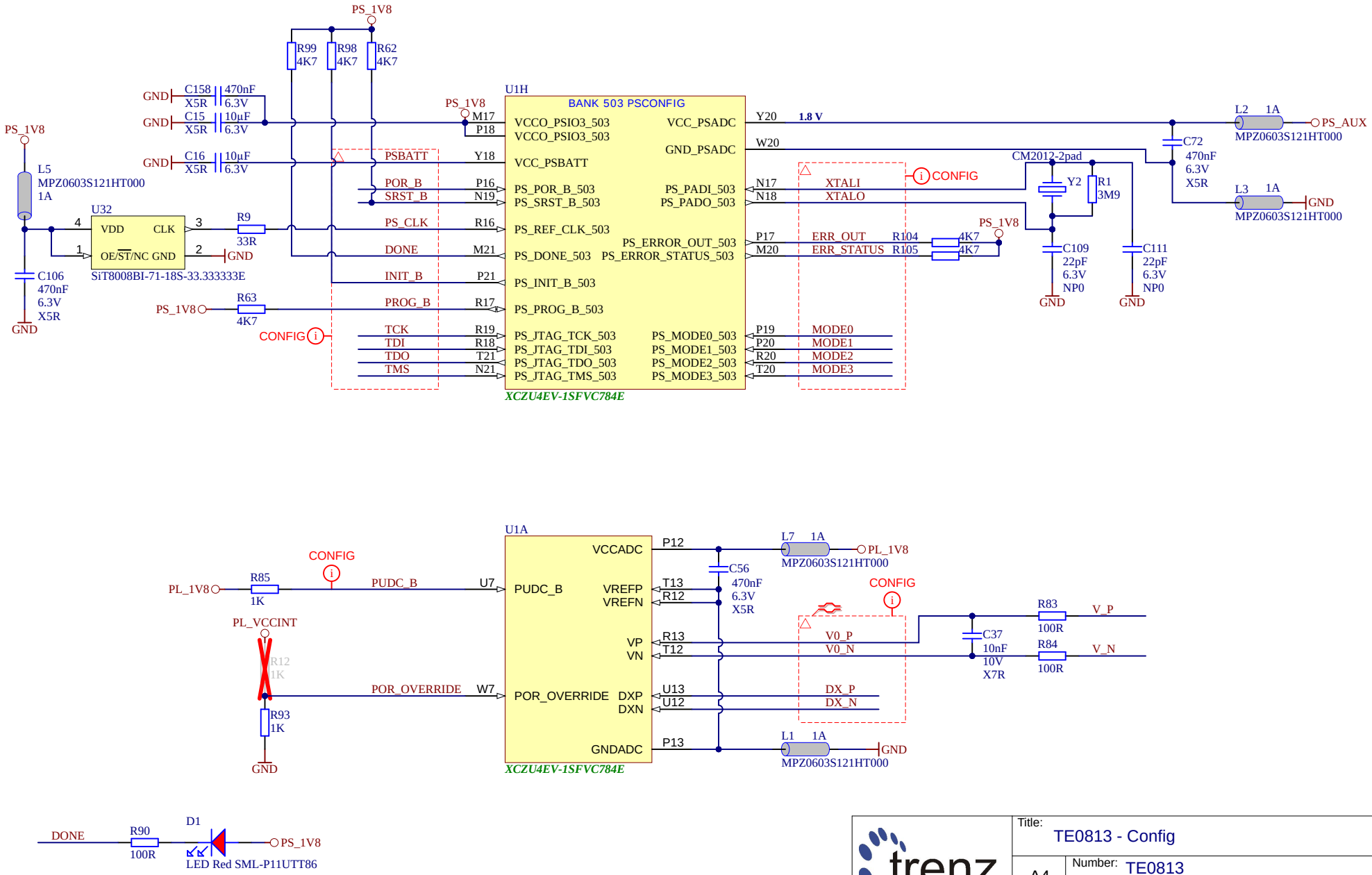

trenz electronic	Title: TE0813 - Config		
A4	Number: TE0813 4DE81-A		Rev. 02
Date: 12.06.2023	Copyright: Trenz Electronic GmbH		Page 11 of 30
Filename: CONFIG.SchDoc			

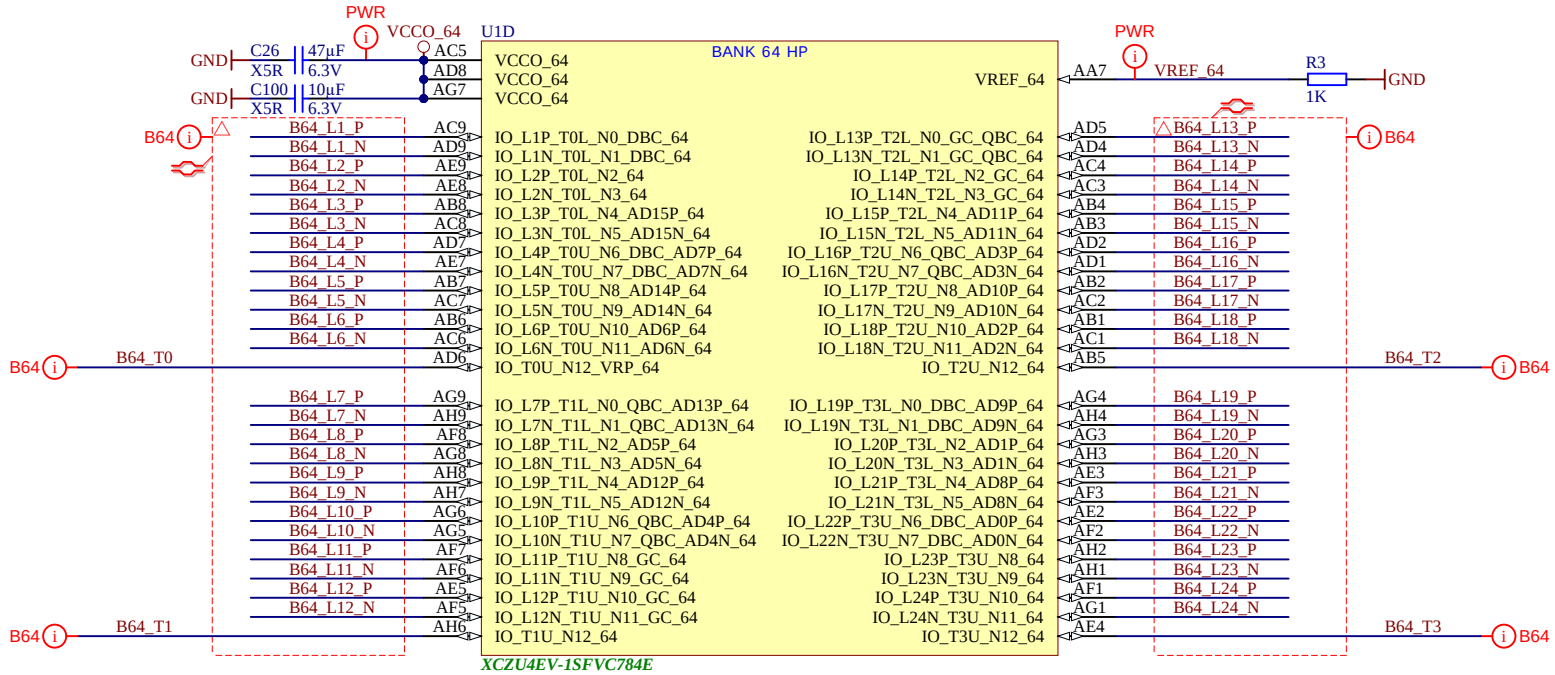

trenz electronic	Title: TE0813 - B64		
A4	Number: TE0813 4DE81-A		Rev. 02
Date: 12.06.2023	Copyright: Trenz Electronic GmbH		Page 12 of 30
Filename: B64.SchDoc			

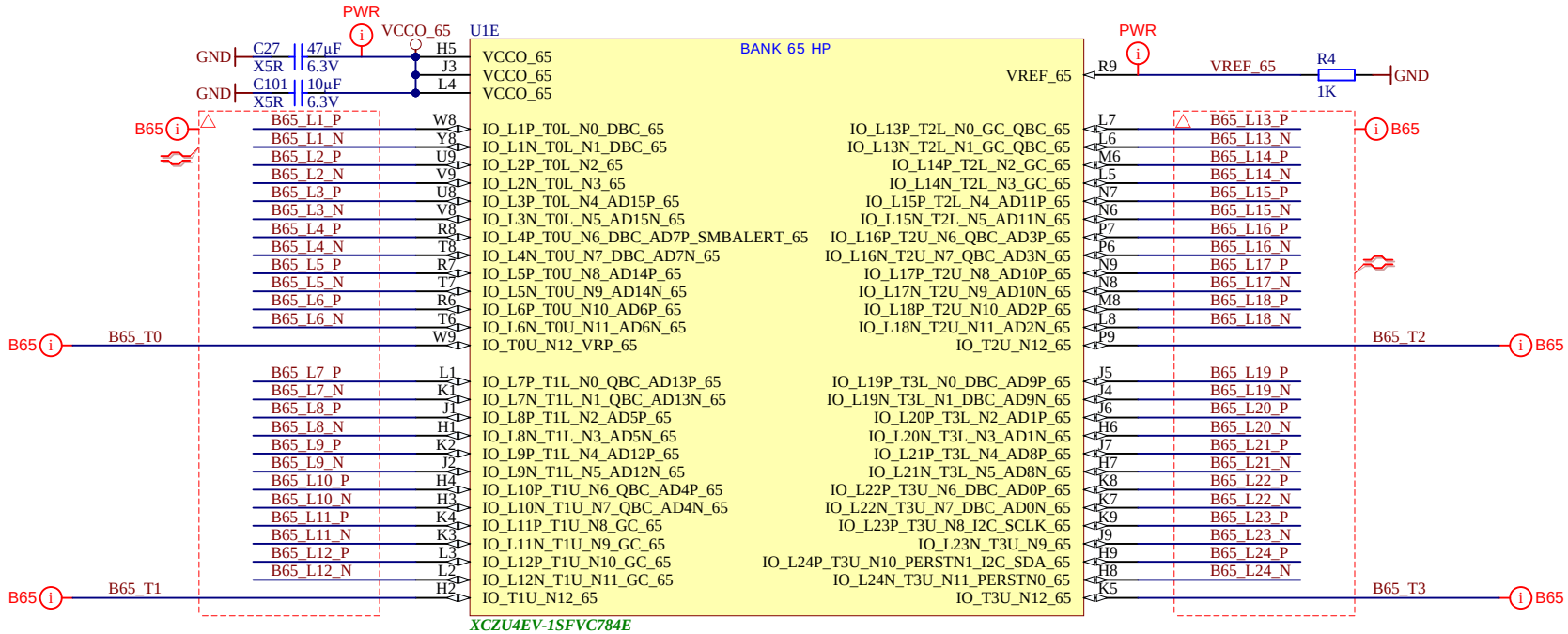

trenz electronic	Title: TE0813 - B65		
A4	Number: TE0813 4DE81-A		Rev. 02
Date: 12.06.2023	Copyright: Trenz Electronic GmbH		Page 13 of 30
Filename: B65.SchDoc			

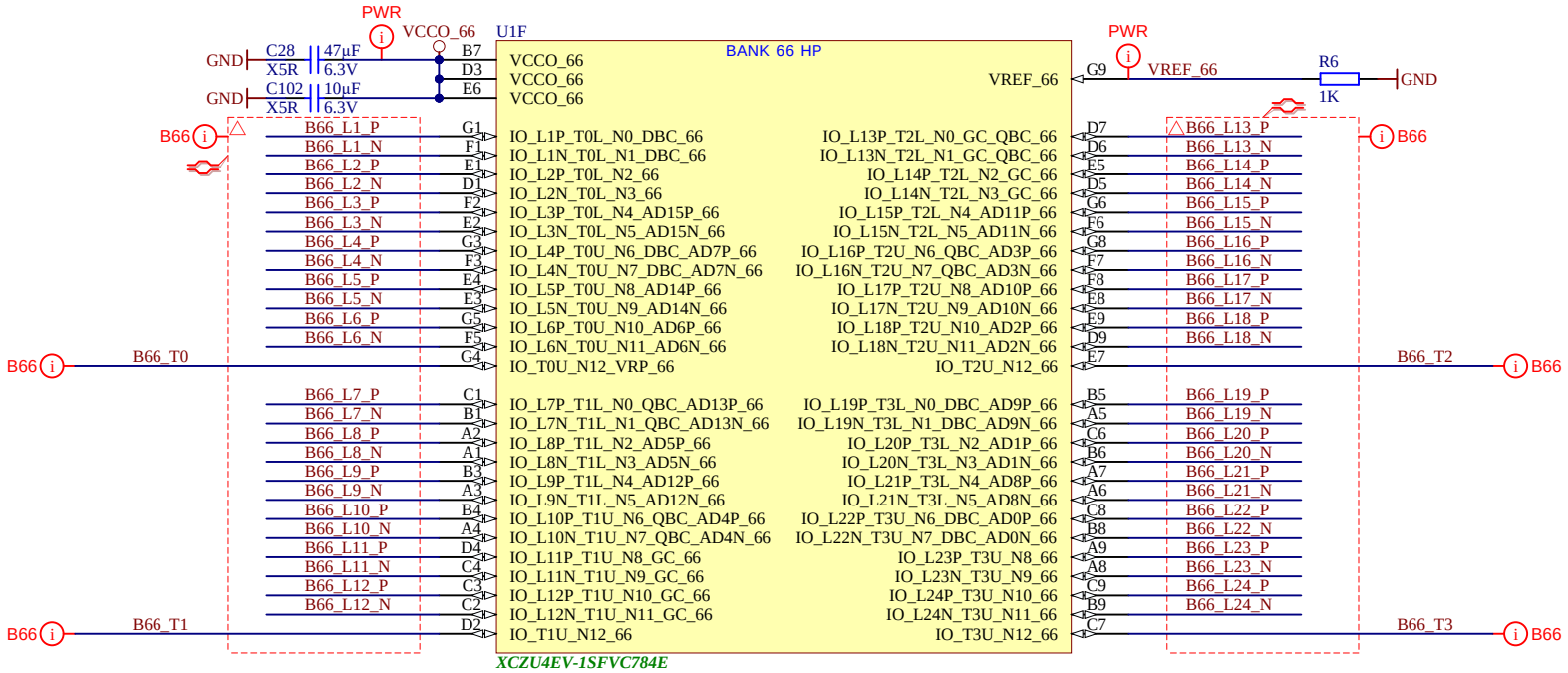

trenz electronic	Title: TE0813 - B66		
A4	Number: TE0813 4DE81-A		Rev. 02
Date: 12.06.2023	Copyright: Trenz Electronic GmbH		Page 14 of 30
Filename: B66.SchDoc			

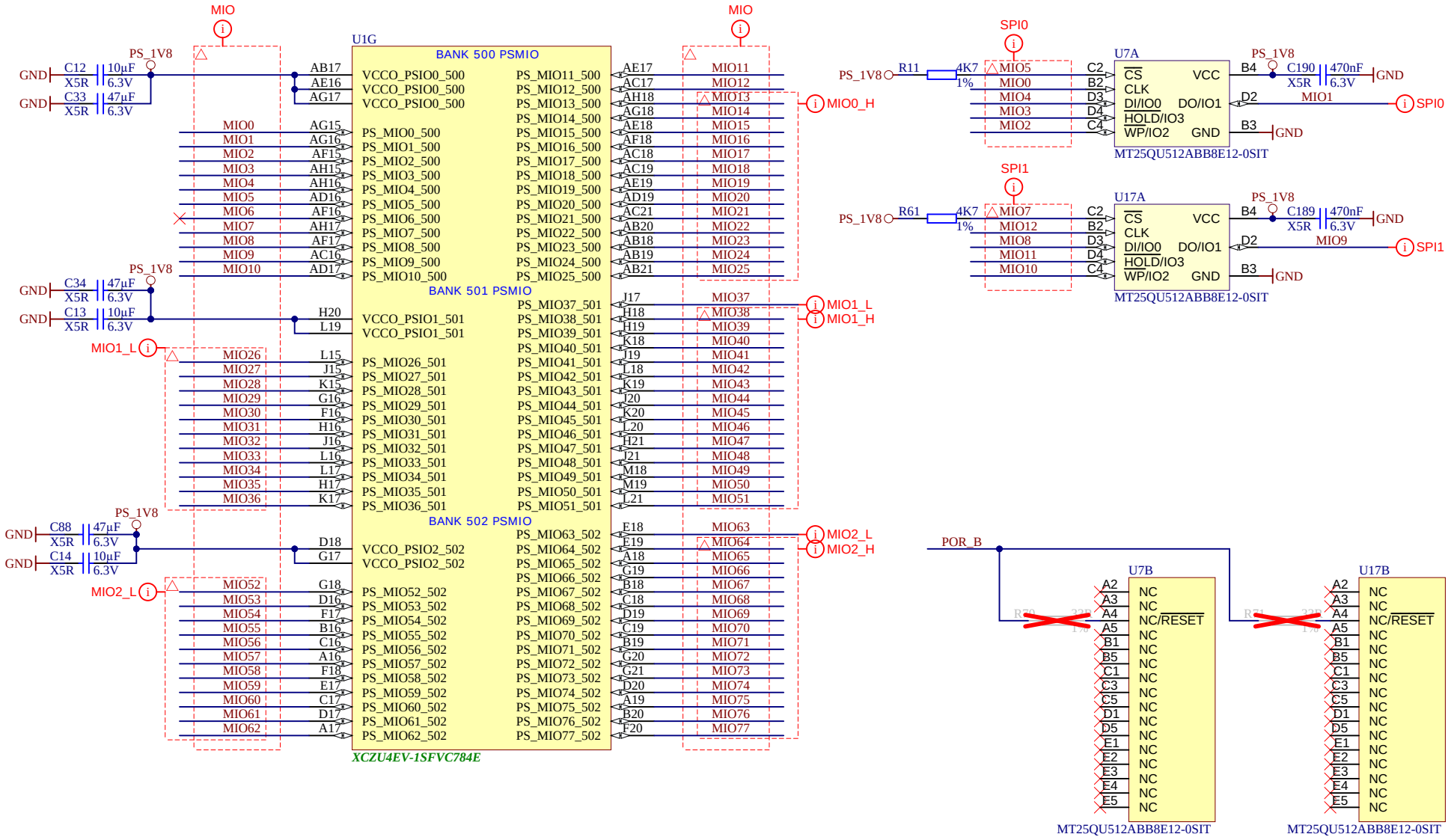

trenz electronic

Title: TE0813 - MIO Banks			
A4	Number: TE0813 4DE81-A		Rev. 02
Date: 12.06.2023	Copyright: Trenz Electronic GmbH		Page 15 of 30
Filename: B_MIO.SchDoc			

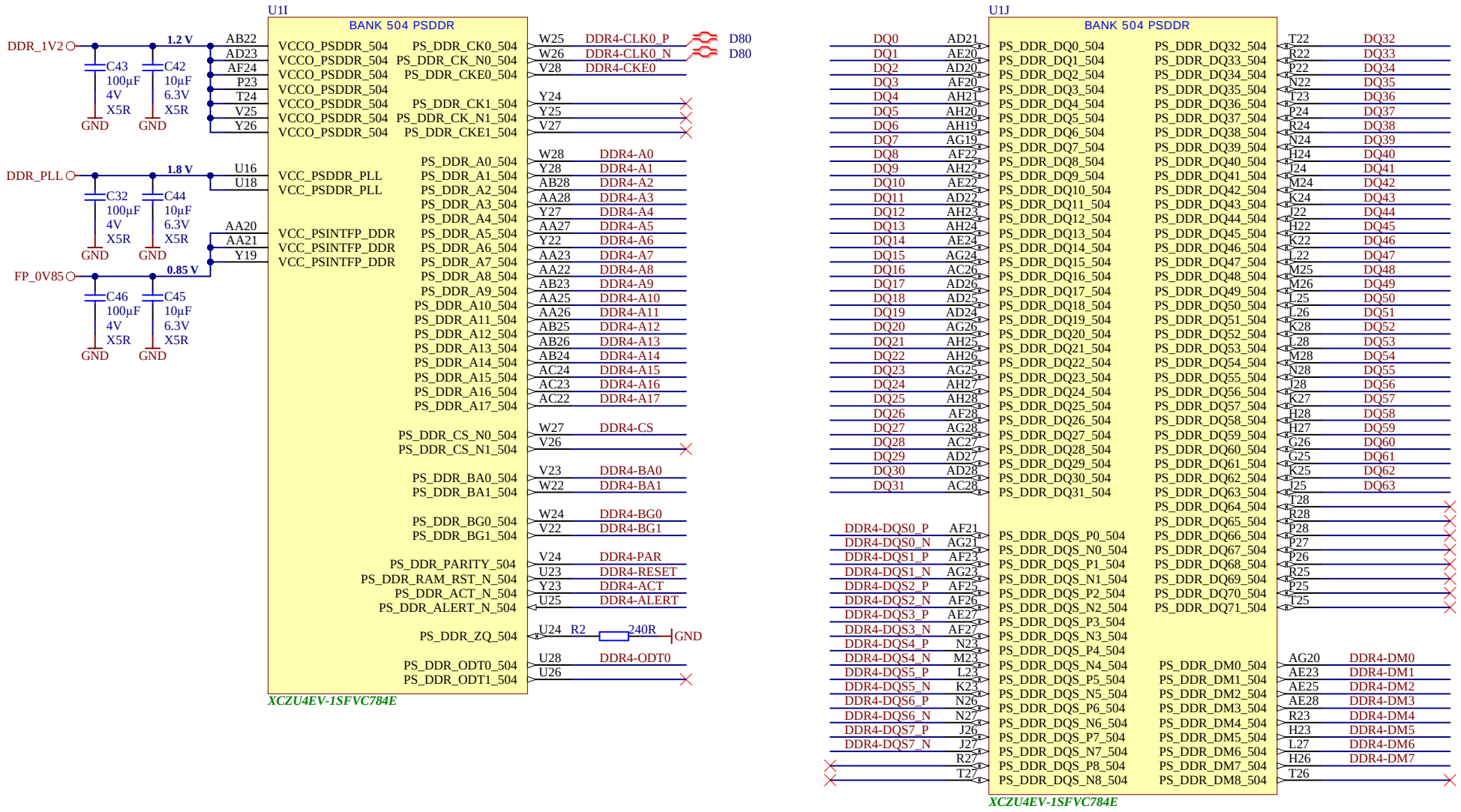

trenz electronic	Title: TE0813 - PS_DDR		
A4	Number: TE0813 4DE81-A		Rev. 02
Date: 12.06.2023	Copyright: Trenz Electronic GmbH		Page 16 of 30
Filename: PS_DDR.SchDoc			

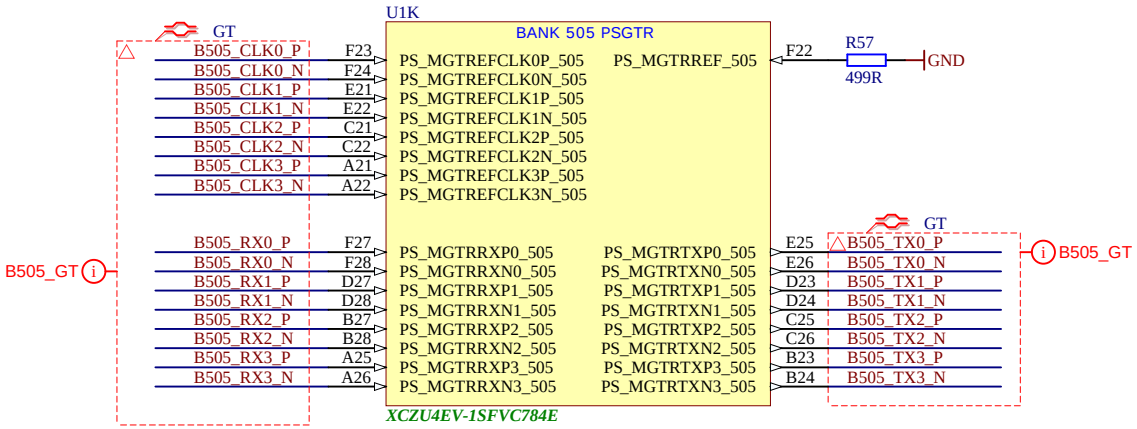

trenz electronic	Title: TE0813 - PS_GT		
A4	Number: TE0813 4DE81-A		Rev. 02
Date: 12.06.2023	Copyright: Trenz Electronic GmbH		Page 17 of 30
Filename: B_PS_GT.SchDoc			

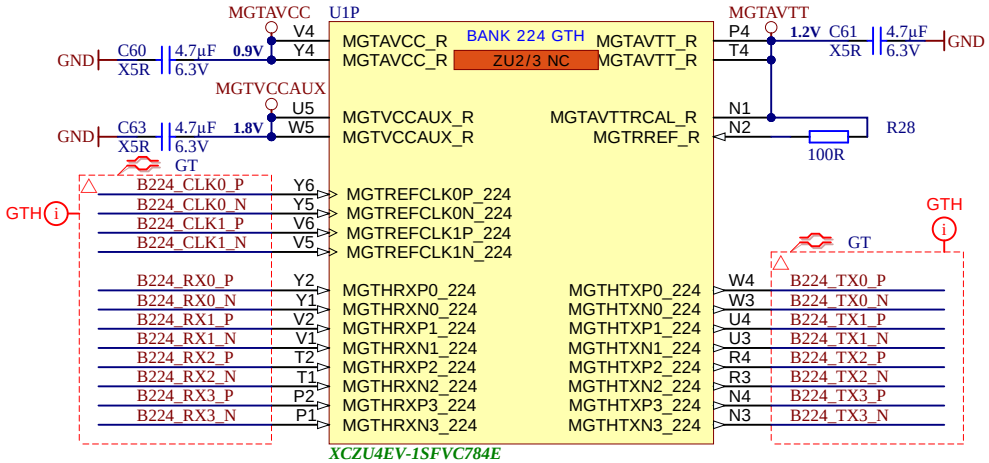

trenz electronic	Title: TE0813 - B224 - GTH		
A4	Number: TE0813 4DE81-A		Rev. 02
Date: 12.06.2023	Copyright: Trenz Electronic GmbH		Page 18 of 30
Filename: B_GT.SchDoc			

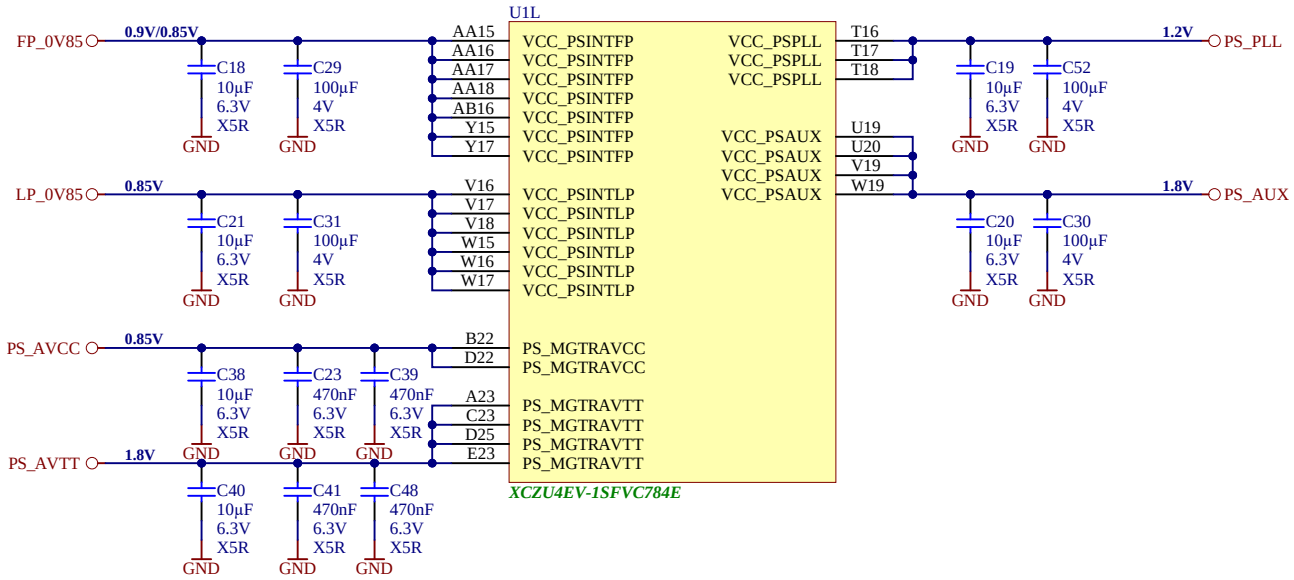

trenz electronic	Title: TE0813 - ZU_PS_POWER		
A4	Number: TE0813 4DE81-A		Rev. 02
Date: 13.06.2023	Copyright: Trenz Electronic GmbH		Page 19 of 30
Filename: ZU_PS_POWER.SchDoc			

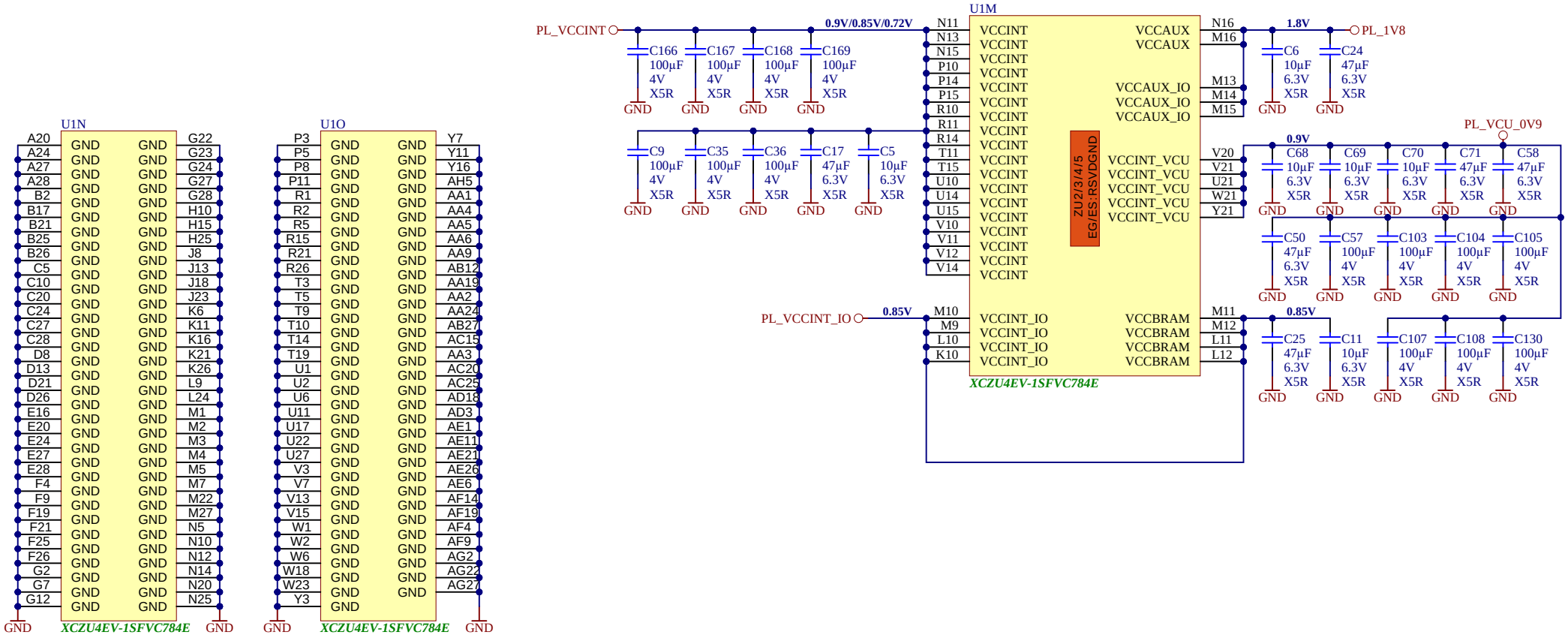

Title: TE0813 - ZU_POWER		
A4	Number: TE0813 4DE81-A	Rev. 02
Date: 12.06.2023	Copyright: Trenz Electronic GmbH	Page 20 of 30
Filename: ZU_POWER.SchDoc		

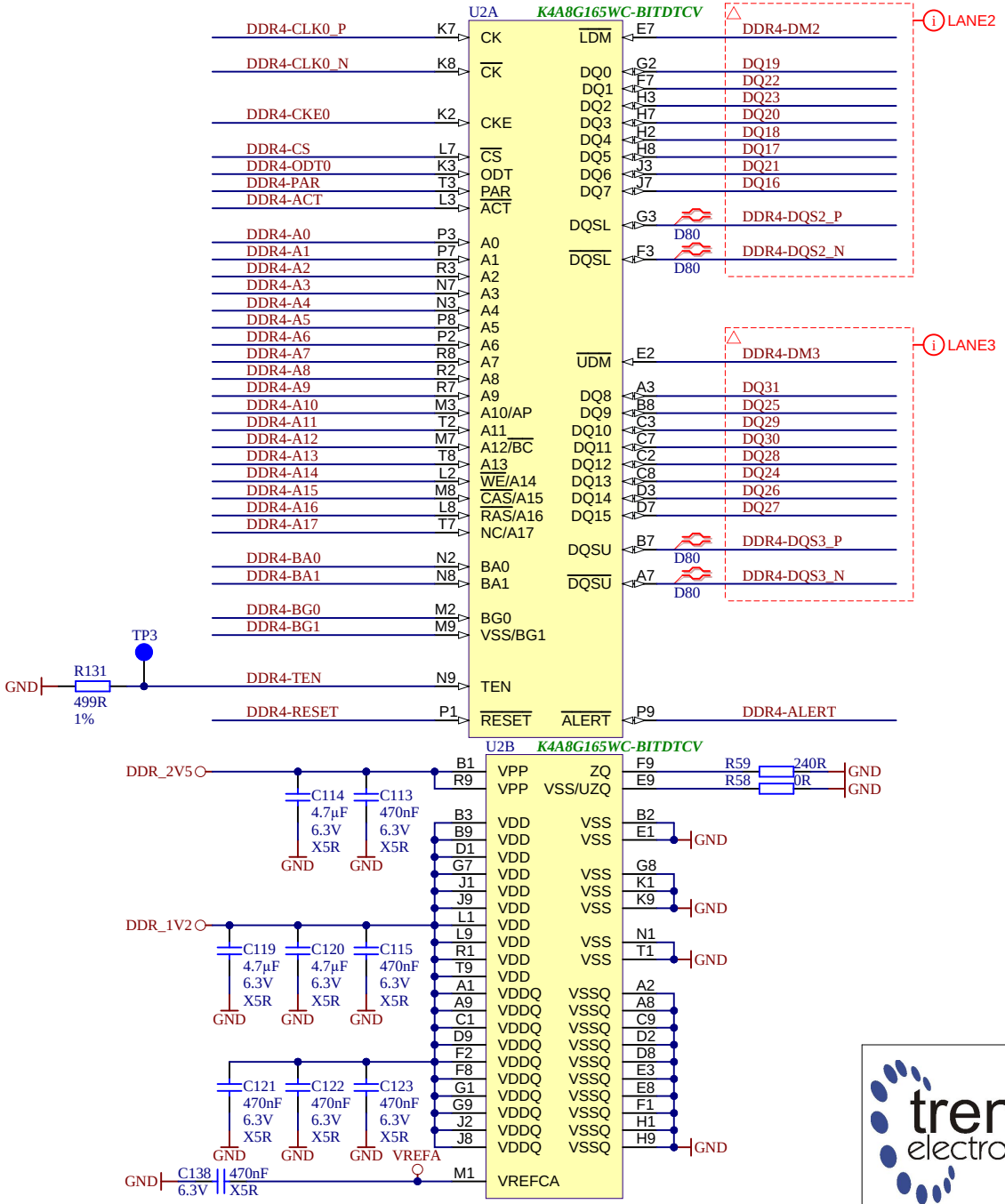

trenz electronic

Title: TE0813 - DDR4_1_RAM			
A4	Number: TE0813 4DE81-A		Rev. 02
Date: 12.06.2023	Copyright: Trenz Electronic GmbH		Page 21 of 30
Filename: DDR4-RAM.SchDoc			

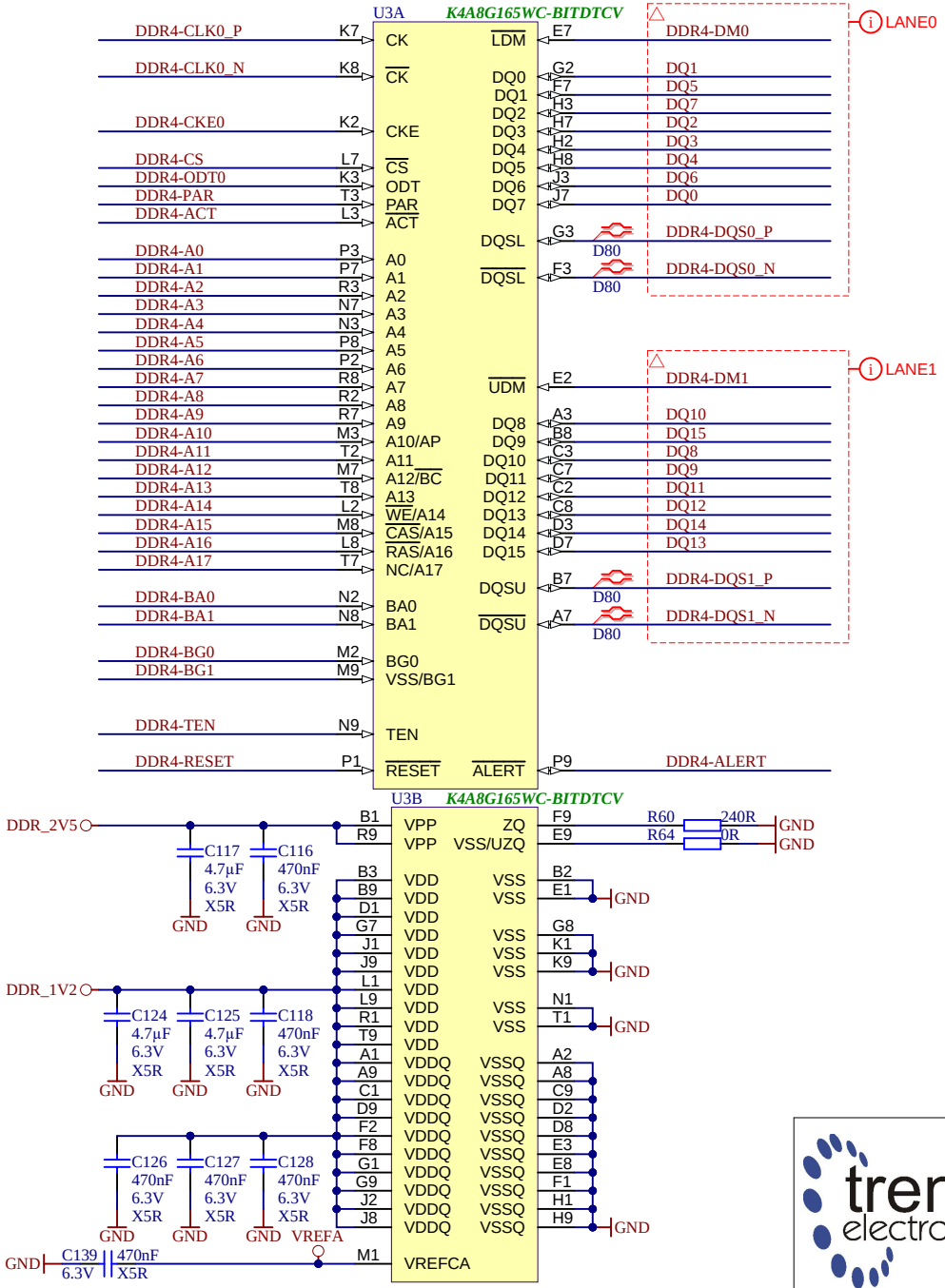

trenz electronic	Title: TE0813 - DDR4_2_RAM		
A4	Number: TE0813 4DE81-A		Rev. 02
Date: 12.06.2023	Copyright: Trenz Electronic GmbH		Page 22 of 30
Filename: DDR4-RAM_2.SchDoc			

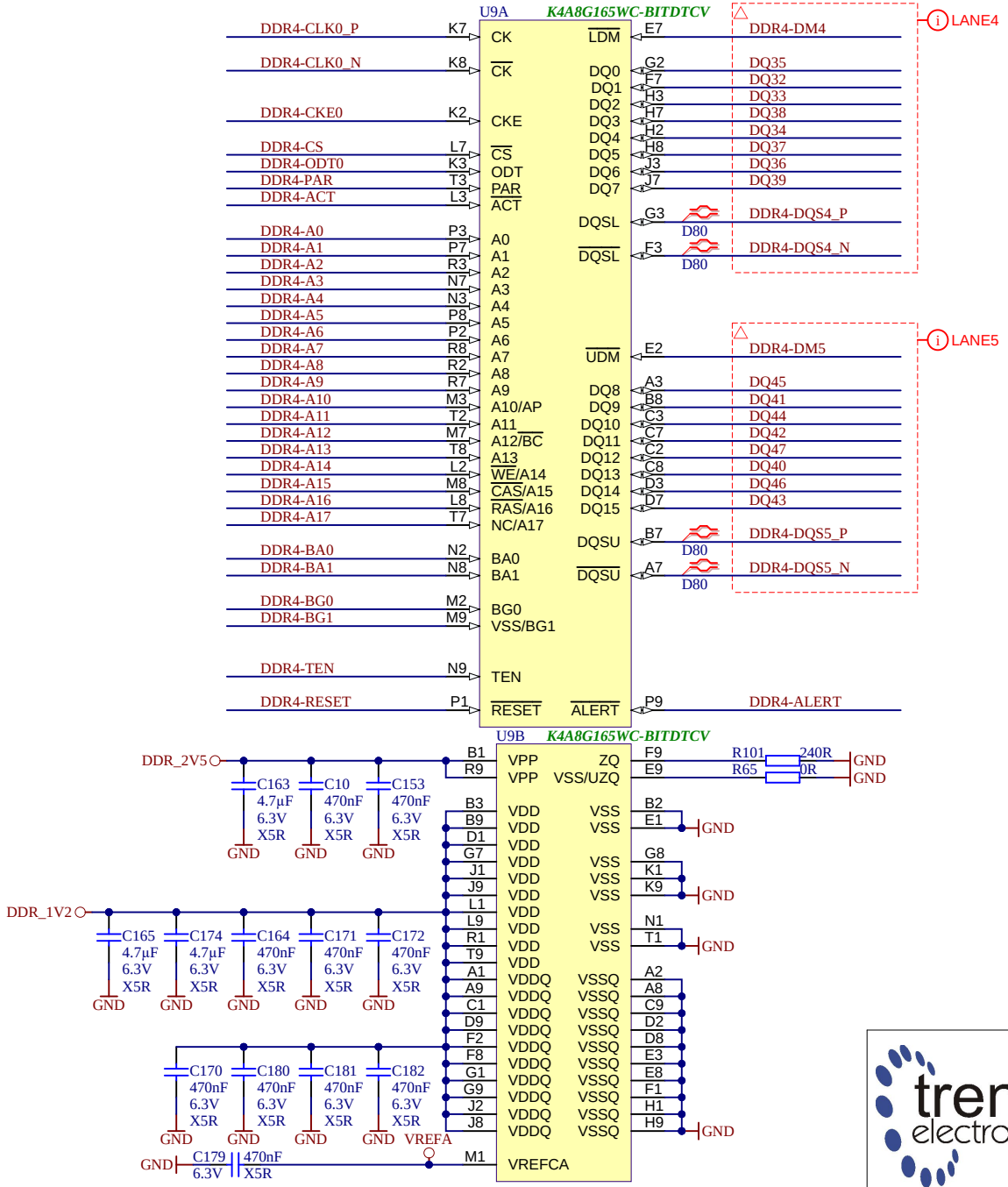

trenz electronic	Title: TE0813 - DDR4_3_RAM		
A4	Number: TE0813 4DE81-A		Rev. 02
Date: 12.06.2023	Copyright: Trenz Electronic GmbH		Page 23 of 30
Filename: DDR4-RAM_3.SchDoc			

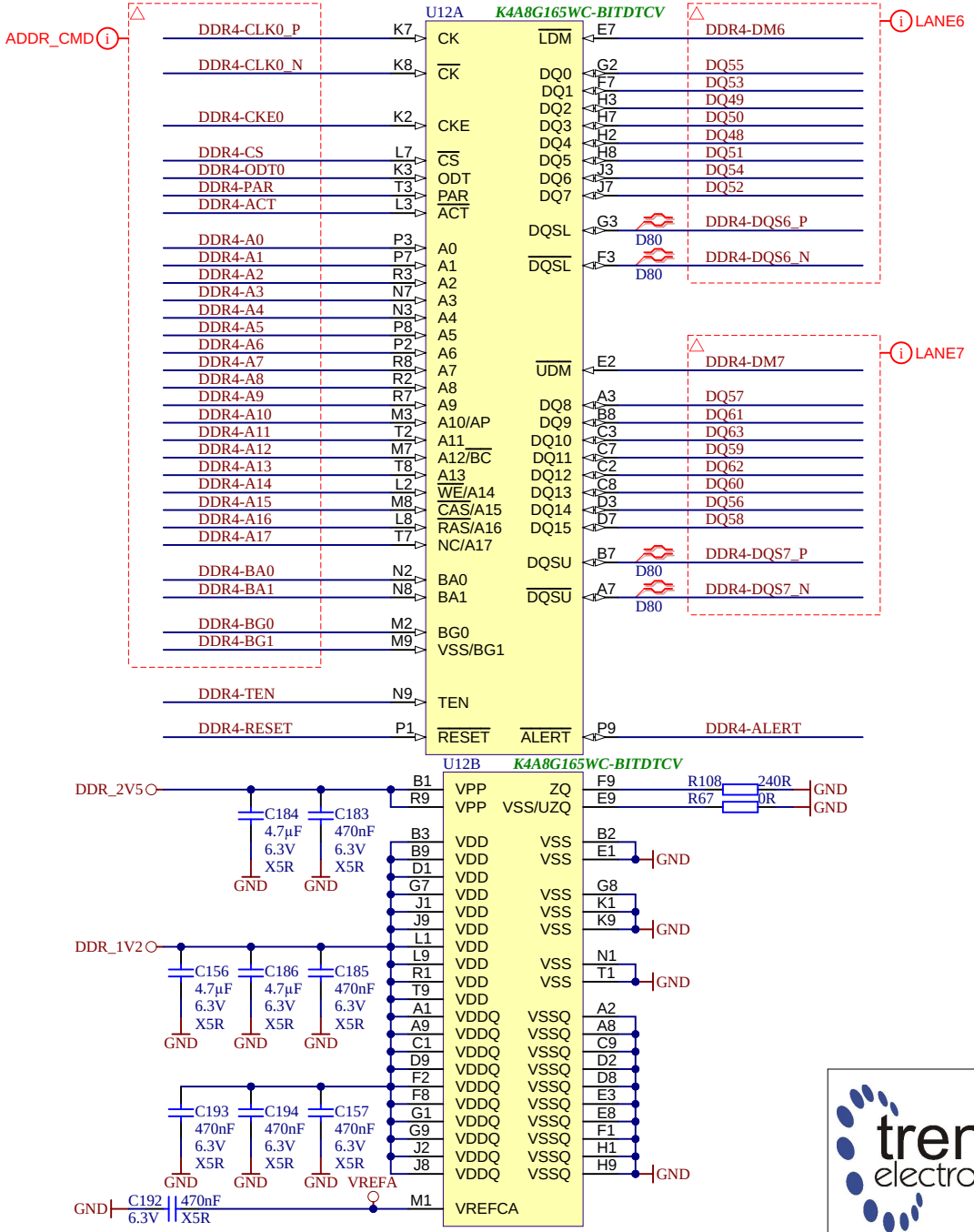

trenz electronic	Title: TE0813 - DDR4_4_RAM		
A4	Number: TE0813 4DE81-A		Rev. 02
Date: 12.06.2023	Copyright: Trenz Electronic GmbH		Page 24 of 30
Filename: DDR4-RAM_4.SchDoc			

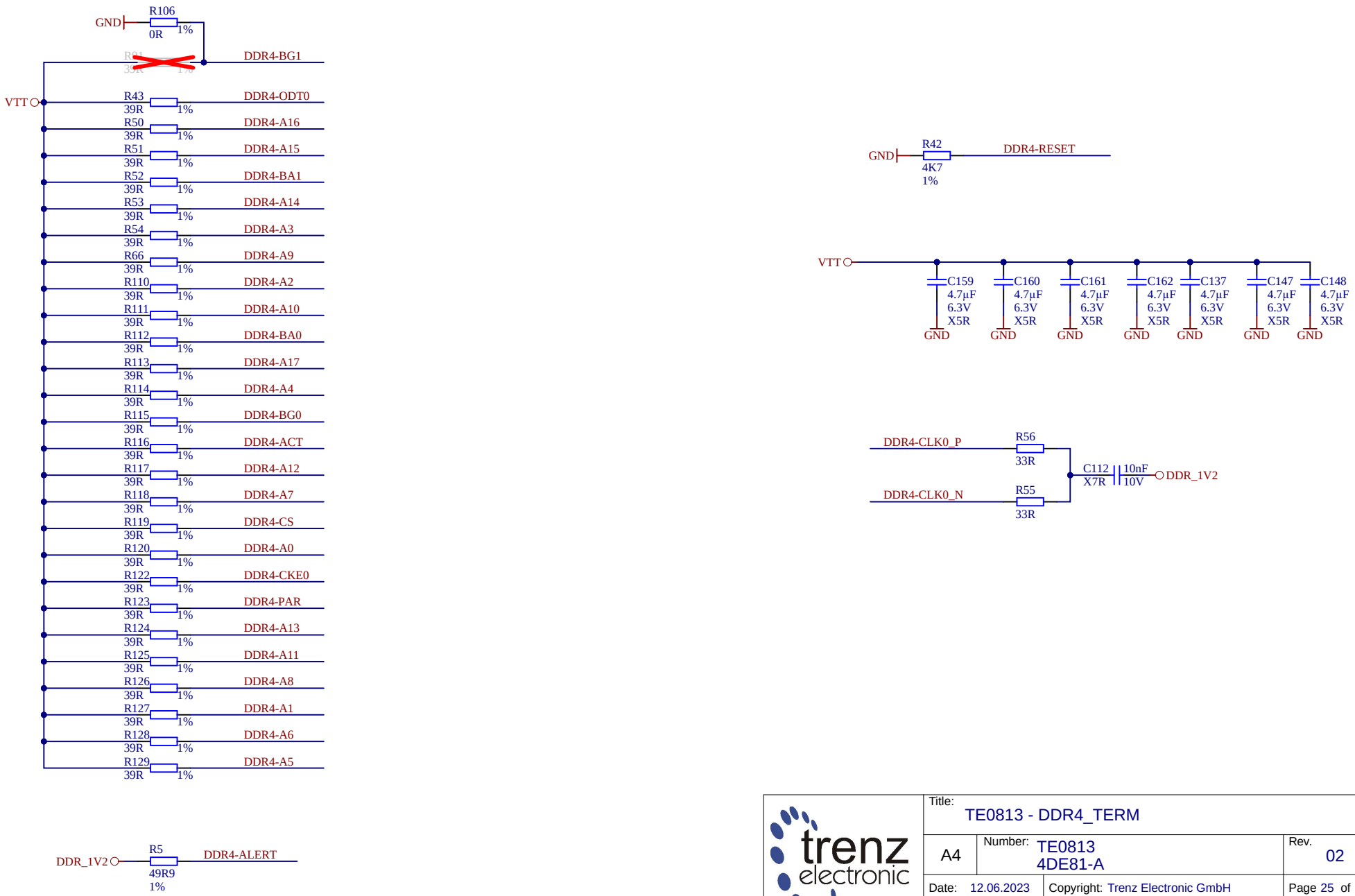

trenz electronic	Title: TE0813 - DDR4_TERM		
A4	Number: TE0813 4DE81-A		Rev. 02
Date: 12.06.2023	Copyright: Trenz Electronic GmbH		Page 25 of 30
Filename: DDR4-TERM.SchDoc			

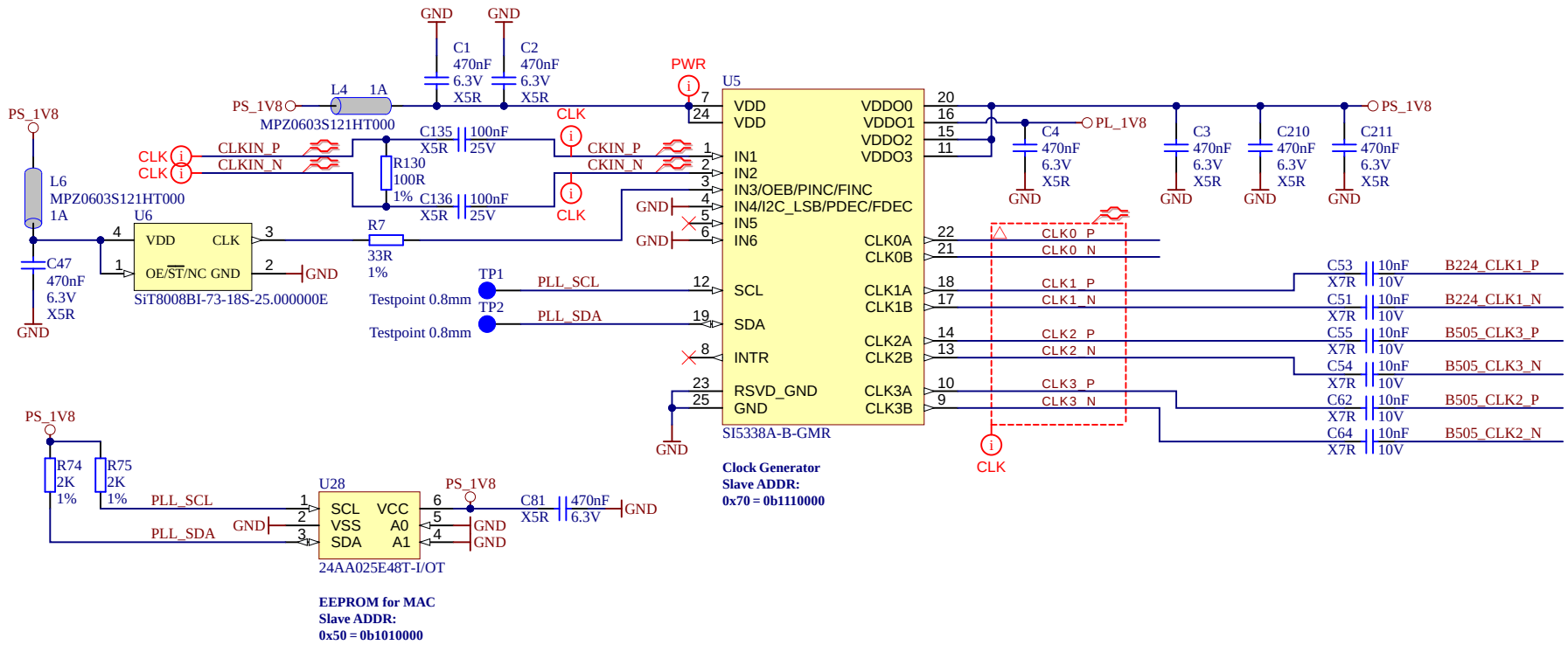

trenz electronic	Title: TE0813 - CLOCK		
A4	Number: TE0813 4DE81-A		Rev. 02
Date: 12.06.2023	Copyright: Trenz Electronic GmbH		Page 26 of 30
Filename: Clock.SchDoc			

U4 can be TPS548A28RWWR or MPQ8633BGLE-Z which is up to Trenz Electronic GmbH.

PL VCCINT

1st

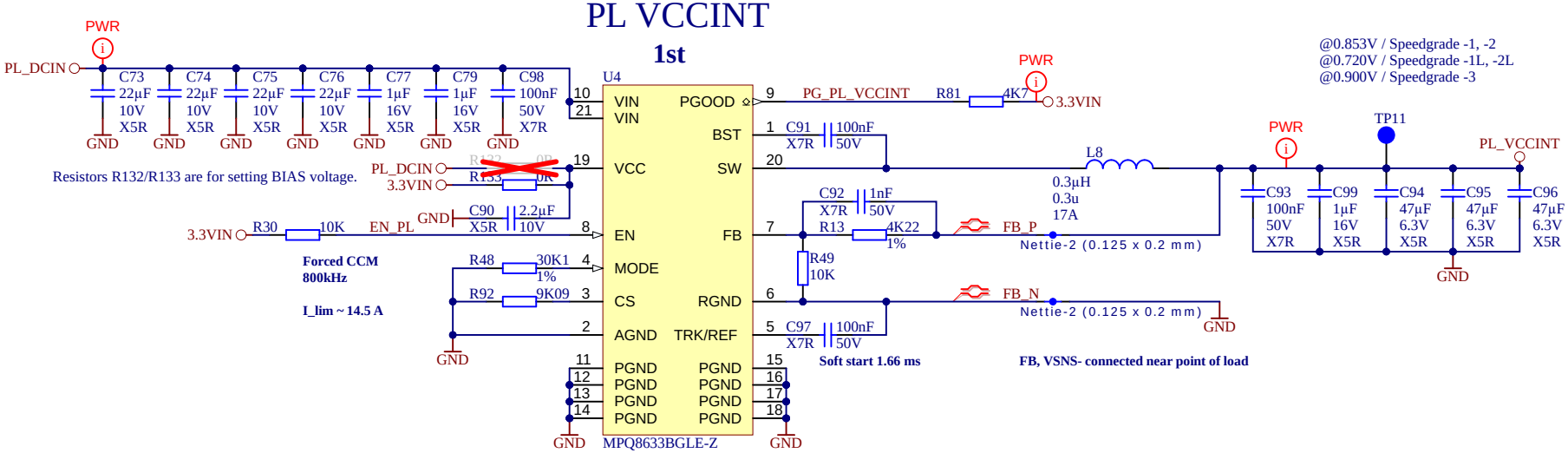

FPGA Speedgrade	R13	R49	PL_VCCINT
-1LI	2 kOhm	10 kOhm	0.720 V
-2LE	2 kOhm	10 kOhm	0.720 V
-1	4.22 kOhm	10 kOhm	0.853 V
-2	4.22 kOhm	10 kOhm	0.853 V
-3E	10 kOhm	20 kOhm	0.900 V

U4 pin compatible with
-- TPS548B28 (20A)
-- TPS548A28 (15A)
-- TPS54JA20 (12A)

trenz electronic	Title: TE0813 - POWER_1		
A4	Number: TE0813 4DE81-A		Rev. 02
Date: 14.06.2023	Copyright: Trenz Electronic GmbH		Page 27 of 30
Filename: POWER.SchDoc			

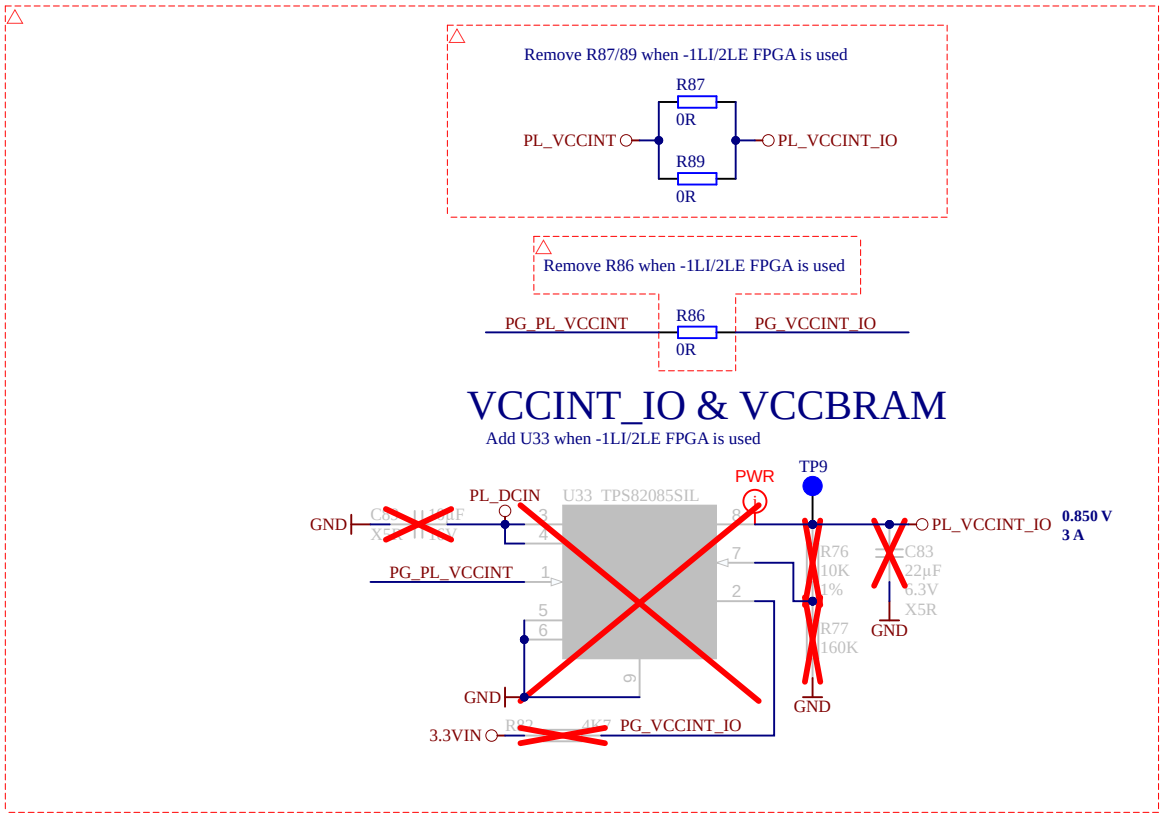

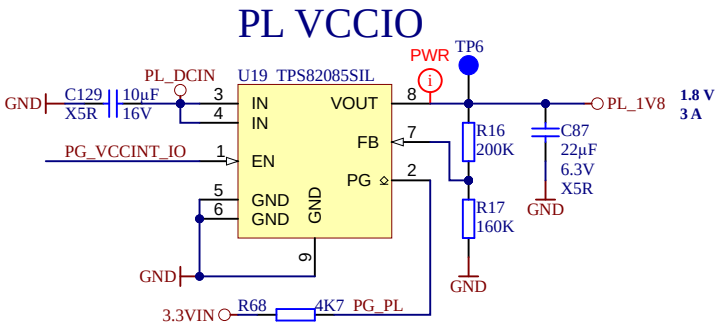

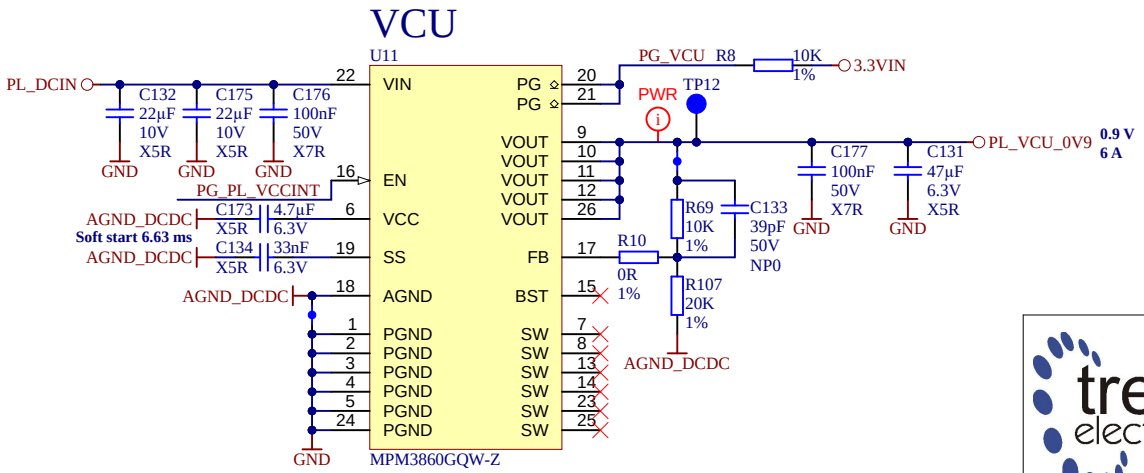

trenz electronic

Title: TE0813 - POWER_2		
A4	Number: TE0813 4DE81-A	Rev. 02
Date: 14.06.2023	Copyright: Trenz Electronic GmbH	Page 28 of 30
Filename: POWER_1.SchDoc		

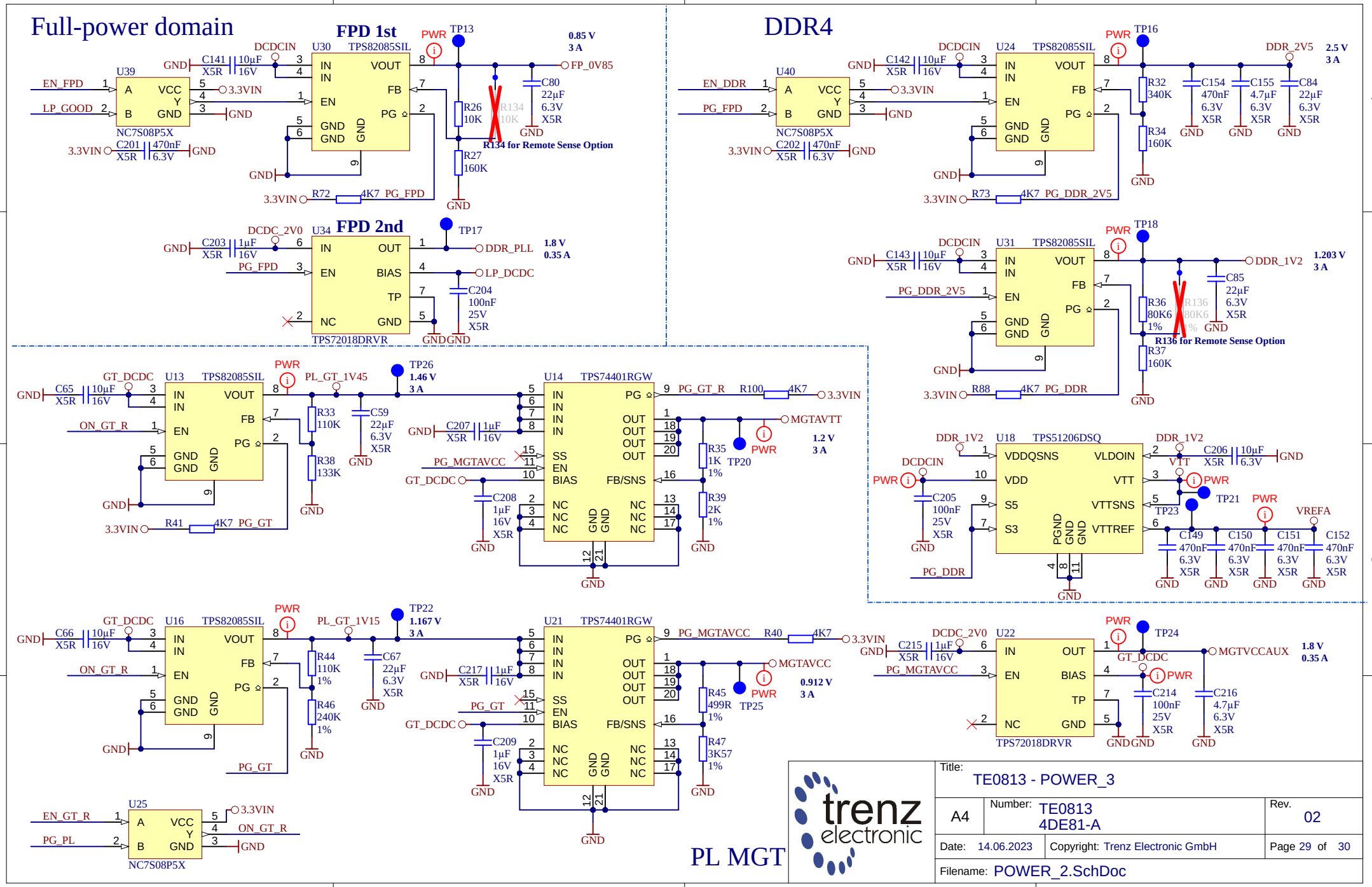
Full-power domain
FPD 1st
U30 TPS82085SIL
U39 NC7S08P5X
EN_FPD
LP_GOOD
3.3VIN
DCDCIN
C141 10µF 16V X5R
C201 470nF 6.3V X5R
R72 4K7 PG_FPD
TP13
0.85 V 3 A
FP_0V85
C80 22µF 6.3V X5R
R26 10K
R134 10K
R27 160K
R134 for Remote Sense Option
FPD 2nd
U34 TPS72018DRVR
DCDC_2V0
C203 1µF 16V X5R
PG_FPD
TP17
DDR_PLL
1.8 V 0.35 A
LP_DCDC
C204 100nF 25V X5R
DDR4
U40 NC7S08P5X
EN_DDR
PG_FPD
U24 TPS82085SIL
C142 10µF 16V X5R
C202 470nF 6.3V X5R
R73 4K7 PG_DDR_2V5
TP16
DDR_2V5
2.5 V 3 A
R32 340K
R34 160K
C154 470nF 6.3V X5R
C155 4.7µF 6.3V X5R
C84 22µF 6.3V X5R
U31 TPS82085SIL
C143 10µF 16V X5R
PG_DDR_2V5
TP18
DDR_1V2
1.203 V 3 A
C85 22µF 6.3V X5R
R36 80K6 1%
R136 80K6 1%
R136 for Remote Sense Option
R37 160K
R88 4K7 PG_DDR
U18 TPS51206DSQ
DDR_1V2
C206 10µF 6.3V X5R
C205 100nF 25V X5R
PG_DDR
TP21
TP23
VREFA
C149 470nF 6.3V X5R
C150 470nF 6.3V X5R
C151 470nF 6.3V X5R
C152 470nF 6.3V X5R
U13 TPS82085SIL
GT_DCDC
C65 10µF 16V X5R
ON_GT_R
PL_GT_1V45
TP26
1.46 V 3 A
R33 110K
R38 133K
C59 22µF 6.3V X5R
R41 4K7 PG_GT
U14 TPS74401RGW
PG_GT_R
R100 4K7
MGTAVTT
1.2 V 3 A
C207 1µF 16V X5R
PG_MGTAVCC
C208 1µF 16V X5R
R35 1K 1%
TP20
R39 2K 1%
U16 TPS82085SIL
C66 10µF 16V X5R
PL_GT_1V15
TP22
1.167 V 3 A
R44 110K 1%
R46 240K 1%
C67 22µF 6.3V X5R
PG_GT
U21 TPS74401RGW
PG_MGTAVCC
R40 4K7
MGTAVCC
0.912 V 3 A
C217 1µF 16V X5R
C209 1µF 16V X5R
R45 499R 1%
TP25
R47 3K57 1%
U25 NC7S08P5X
EN_GT_R
PG_PL
ON_GT_R
U22 TPS72018DRVR
C215 1µF 16V X5R
TP24
MGTVCCAUX
1.8 V 0.35 A
C214 100nF 25V X5R
C216 4.7µF 6.3V X5R
PL MGT
trenz electronic
Title: TE0813 - POWER_3
A4
Number: TE0813 4DE81-A
Rev. 02
Date: 14.06.2023
Copyright: Trenz Electronic GmbH
Page 29 of 30
Filename: POWER_2.SchDoc

Low-power domain

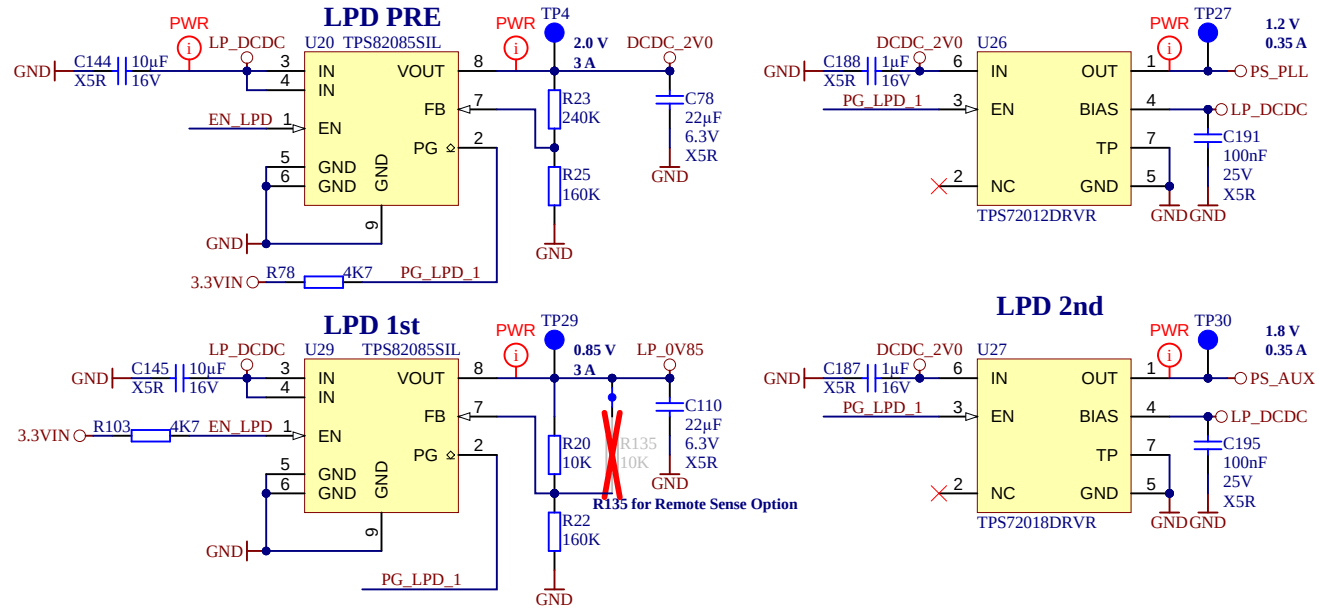

PS MGT

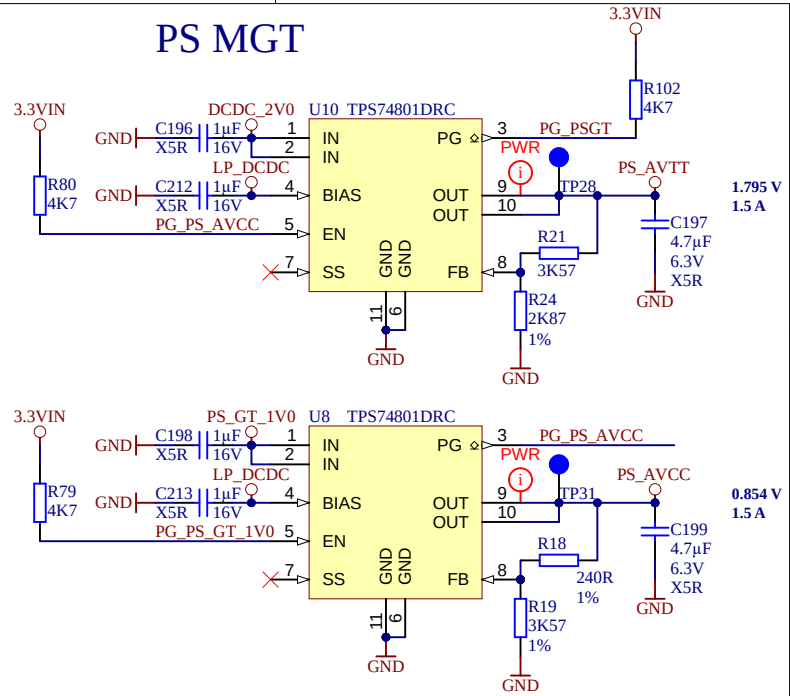

PS MIO VCCIO

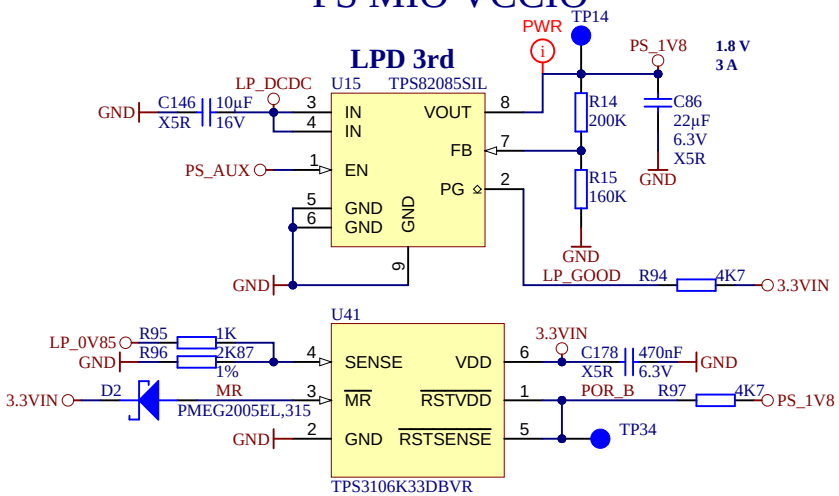

Net Name	Voltage Rail	Low Detect
LP_0V85	0.85 V	0.743 V
3.3VIN	3.3 V	2.941 V

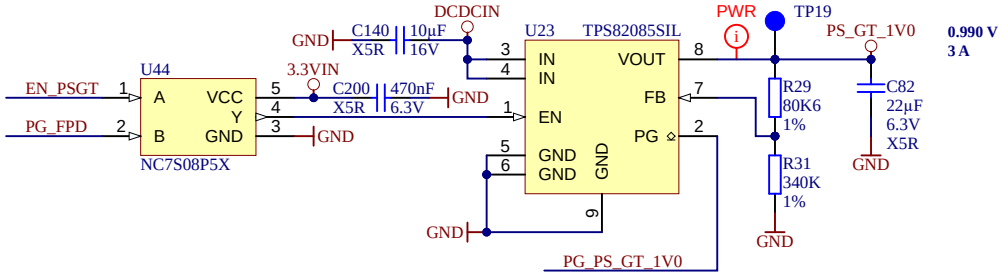

Title: TE0813 - POWER_4		
A4	Number: TE0813 4DE81-A	Rev. 02
Date: 14.06.2023	Copyright: Trenz Electronic GmbH	Page 30 of 30
Filename: POWER_3.SchDoc		

Mouser Electronics

Authorized Distributor

Click to View Pricing, Inventory, Delivery & Lifecycle Information:

Trenz Electronic:

TE0813-02-4DE81-A