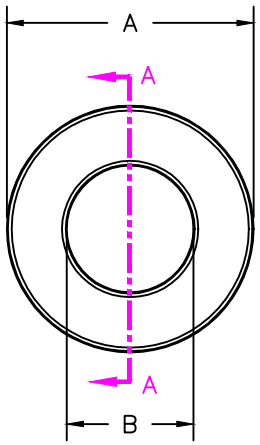

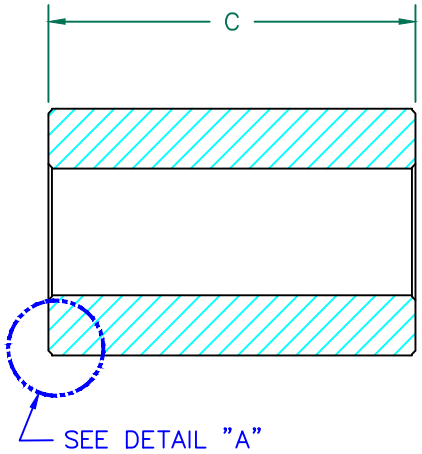

IMPEDANCE (Z)			
Frequency	25 MHz	100 MHz	300 MHz
Nominal (REF)	130 Ω	245 Ω	360 Ω
Minimum	- Ω	196 Ω	- Ω

Z vs. FREQUENCY
(REF. ONLY)

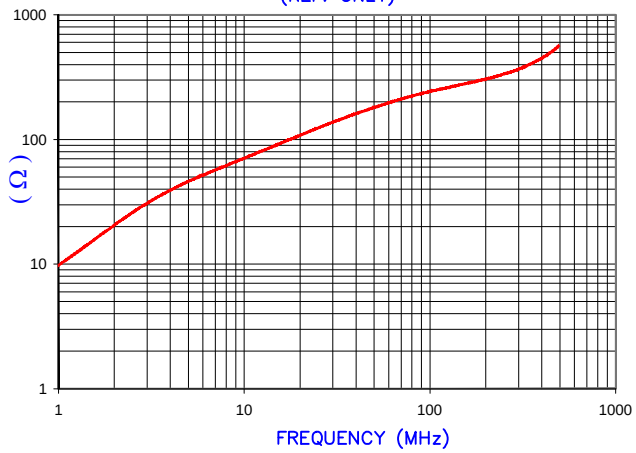

AGILENT E4991A Impedance/Material Analyzer
HP 16092A Test Fixture

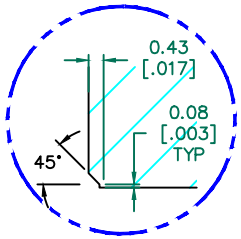

DETAIL "A"
CHAMFER
SCALE=5:1

FERRITE CORE DIMENSIONS (SPEC): mm/inches

A	17.07 [.672]		+0.25 [.010] −0.36 [.014]
B	8.76 [.345]	±	0.20 [.008]
C	25.40 [1.000]	±	0.76 [.030]

WEIGHT/1000 21.15 kgs [46.62 Lbs]

NOTES: UNLESS OTHERWISE SPECIFIED

1. PARTS MUST BE TUMBLED, BURNISHED OR DEBURRED TO REMOVE ALL BURRS AND SHARP EDGES.
2. COSMETIC SPECIFICATION REFER TO WI-QA-038.

SCALE DRAWING 1:1

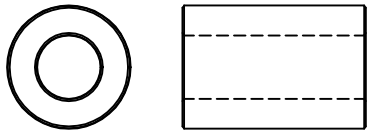

28B0672-000

RoHS

DIMENSIONS ARE IN mm [INCHES].

REV	DESCRIPTION	DATE	INT
J	UPDATE THE LOGO	05/13/15	QIU
H	UPDATE TEMPALTE	12/25/09	Jcai
G	CHANGE NOTE 1, UPDATE PRINT FORMAT UPDATE Z SPECS ADD CURVE	03/03/03	JRK
F	UPDATE FORMAT ADD KGS TO WEIGHT UPDATE Z SPECS	05/02/02	JRK

This print is the property of Laird Tech. and is loaned in confidence subject to return upon request and with the understanding that no copies shall be made without the written consent of Laird Tech. All rights to design or invention are reserved.

Laird

PROJECT/PART NUMBER:	REV	PART TYPE:	DRAWN BY:
28B0672-000	J	FERRITE CNZ CORE	DJB

DATE:	SCALE:	MATERIAL:
05/28/92	2 : 1	FERRITE
CAD # 28B0672-000-J	TOOL # B0672	

Mouser Electronics

Authorized Distributor

Click to View Pricing, Inventory, Delivery & Lifecycle Information:

Laird Performance Materials:

28B0672-000