Laird MSD45N

Hardware Integration Guide
Version 1.4

global solutions: local support™

Embedded Wireless Solutions Support Center: http://ews-support.lairdtech.com
Americas: +1-800-492-2320
Europe: +44-1628-858-940
Asia: +852-2923-0610
www.lairdtech.com/wireless

REVISION HISTORY

Version	Revision Date	Change Description	Approved By
1.0	25 July 2014	Initial Release	Andrew Chen
1.1	5 August 2014	Added note to SDIO Timing Requirements section regarding SDIO bus clock rate.	Andrew Chen
1.2	06 Feb 2015	Updated certifications; removed KC and MIC certification references	Andrew Chen
1.3	08 Jun 2015	Updated the Tx power and Rx sensitivity numbers.	Andrew Chen
1.4	15 Oct 2015	Updated Antenna Data Sheet links	Sue White

© Copyright 2015 Laird. All Rights Reserved

CONTENTS

Scope 4
Operational Description 4
Block Diagram 5
Specifications 5
Recommended Operating Conditions and DC Electrical Characteristics 9
SDIO Timing Requirements 9
Pin Definitions 11
MSD40NBT and MSD45N Pin Comparison Table 14
Integration Considerations 15
Mechanical Specifications 16
Connector Overview 16
MSD45N Attached to T-Board 16
Mounting 17
RF Layout Design Guidelines 17
Regulatory 18
Certified Antennas 18
Documentation Requirements 18
FCC 18
Industry Canada 20
European Union 22
Appendix A: Schematic 25

© Copyright 2015 Laird. All Rights Reserved

SCOPE

This document describes key hardware aspects of the Laird MSD45N radio module. This document is intended to assist device manufacturers and related parties with the integration of this radio into their host devices. Data in this document is drawn from a number of sources and includes information found in the Qualcomm Atheros (QCA) AR6003 data sheet issued in January 2010, along with other documents provided from Qualcomm Atheros.

The information in this document is subject to change. Please contact Laird Technologies or visit http://www.lairdtech.com/wireless to obtain the most recent version of this document.

OPERATIONAL DESCRIPTION

This device is a Laird MSD45N radio module which supports IEEE 802.11a/b/g/n standards via an SDIO (Secure Digital Input/Output) interface. The radio operates in unlicensed portions of the 2.4 GHz and 5 GHz radio frequency spectrum. The device is compliant with IEEE 802.11a, 802.11b, 802.11g, and 802.11n standards using Direct Sequence Spread Spectrum (DSSS) and Orthogonal Frequency Division Multiplexing (OFDM). The device supports all 802.11a, 802.11b, 802.11g, and 802.11n data rates and automatically adjusts data rates and operational modes based on various environmental factors.

When operating on channels in the UNII-2 and UNII-2 Extended bands that are in the 5GHz portion of the frequency spectrum and are subject to Dynamic Frequency Selection requirements, the MSD45N fully conforms to applicable regulatory requirements. In the event that specified types of radar are detected by the network infrastructure, the MSD45N fully conforms to commands from the infrastructure for radar avoidance.

The MSD45N interfaces to host devices via a 60-pin connector. The device is based on the Qualcomm Atheros AR6003 chip which is an integrated device providing a Media Access Controller (MAC), a Physical Layer Controller (baseband or BB processor), and fully integrated dual-band radio transceiver. To maximize operational range, the MSD45N incorporates external 2.4 and 5 GHz power amplifiers (PA) to increase transmit power. The frequency stability for both 2.4 GHz (802.11b and 802.11g) and 5 GHz (802.11a) operation is +/- 20 ppm.

On the interface connector (Molex 60-pin connector; pin 21), an I/O voltage level configuration (either 3.3 V or 1.8 V) is required from the host platform to configure the SDIO bus signal to run at a 3.3 V or 1.8 V signal level. The MSD45N also provides the 3-wire Wi-Fi/BT coexistence signals to ensure the performance of Wi-Fi and BT system when they reside in the same platform. A cellular coexistence filter is implemented on the MSD45N to provide robust performance when implemented with a cellular system.

The MSD45N has its own RF shielding and does not require shielding provided by the host device into which it is installed in order to maintain compliance with applicable regulatory standards. As such, the device may be tested in a standalone configuration via an extender card.

The device buffers all data inputs so that it will comply with all applicable regulations even in the presence of over-modulated input from the host device. Similarly, the MSD45N incorporates power regulation to comply with all applicable regulations even when receiving excess power from the host device.

The MSD45N combines the 2.4 and 5 GHz signal path to signal U.FL type antenna connectors to support dual band transmission and receive. An antenna diversity function is NOT supported in this product. Supported host device antenna types include dipole and monopole antennas.

Regulatory operational requirements are included with this document and may be incorporated into the operating manual of any device into which the MSD45N is installed. The MSD45N is designed for installation into mobile devices such as vehicle mount data terminals (which typically operate at distances greater than 20

© Copyright 2015 Laird. All Rights Reserved

cm from the human body) and portable devices such as handheld data terminals (which typically operate at distances less than 20 cm from the human body). See "Documentation Requirements" for more information.

Block Diagram

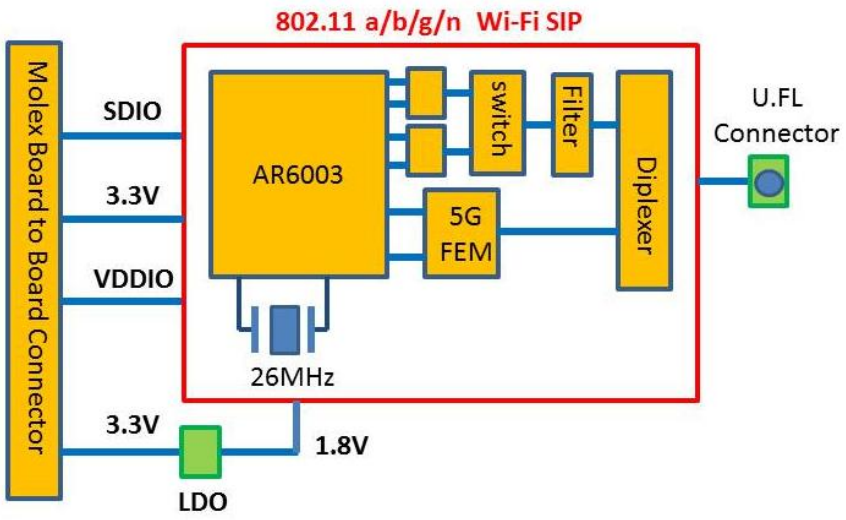

Figure 1: MSD45 Block Diagram

Note: Transmitter frequencies for Wi-Fi are 2412-2462 MHz and 5180-5805 MHz.

Specifications

Table 1: Specifications

Feature	Description
Physical Interface	Molex 54722-0607 60-pin connector (mates to Molex 55560-0607 60-pin connector)
Wi-Fi Interface	1-bit or 4-bit Secure Digital I/O **Note:** Can support 1.8 V or 3.3 V depending on the supply voltage on VDDIO (pin-21).
Antenna Interface	1 Hirose U.FL connector
Main Chip	Qualcomm Atheros AR6003 single-chip client
Input Voltage Requirements	3.3 VDC ± 5% (core)
I/O Signalling Voltage	3.3 VDC ± 5% 1.8 VDC ± 5%

Average Current Consumption (At maximum transmit power setting)

Note: *Standby* refers to the radio operating in PM1 powersave mode.

	Mode	1.8 V		3.3 V	
		Avg. Current	Max. Current	Avg. Current (mA)	Max. Current (mA)
802.11a	Transmit	0.11	0.11	496	500
	Receive	0.11	-	0.2	-
	Standby	TBD	TBD	TBD	TBD
802.11b	Transmit	0.11	0.11	380	420
	Receive	0.11	-	0.2	-
	Standby	TBD	TBD	TBD	TBD

© Copyright 2015 Laird. All Rights Reserved

Feature	Description					
	802.11g	Transmit	0.11	0.11	355	410
		Receive	0.11	-	0.2	-
		Standby	TBD	TBD	TBD	TBD
	802.11n (2.4 GHz)	Transmit	0.11	0.11	342	420
		Receive	0.11	-	0.2	-
		Standby	TBD	TBD	TBD	TBD
	802.11n (5 GHz)	Transmit	0.11	0.11	422	500
		Receive	0.11	-	0.2	-
		Standby	TBD	TBD	TBD	TBD
	Sleep	N/A	TBD	TBD	TBD	TBD
Operating Temperature	-20° to 70°C (-4° to 158°F)					
Operating Humidity	10 to 90% (non-condensing)					
Storage Temperature	-40° to 85°C (-40° to 185°F)					
Storage Humidity	10 to 90% (non-condensing)					
Maximum Electrostatic Discharge	Maximum Contact Discharge (CD): 4 kV Maximum Air Discharge (AD): 8 kV					
Length	32 mm (1.26 in.)					
Width	22 mm (0.87 in.)					
Thickness	3.38 mm (0.17 in.)					
Weight	0.2 g (0.08 oz.)					
Mounting	60-pin connector, three grounded mounting holes (M2 screws)					
Wi-Fi Media	Direct Sequence-Spread Spectrum (DSSS) Complementary Code Keying (CCK) Orthogonal Frequency Divisional Multiplexing (OFDM)					
Wi-Fi Media Access Protocol	Carrier sense multiple access with collision avoidance (CSMA/CA)					
Network Architecture Types	Infrastructure and ad hoc					
Wi-Fi Standards	IEEE 802.11a, 802.11b, 802.11d, 802.11e, 802.11g, 802.11h, 802.11i, 802.11n					
Wi-Fi Data Rates Supported	802.11a (OFDM): 6, 9, 12, 18, 24, 36, 48, 54 Mbps 802.11b (DSSS, CCK): 1, 2, 5.5, 11 Mbps 802.11g (OFDM): 6, 9, 12, 18, 24, 36, 48, 54 Mbps 802.11n (OFDM,HT20,MCS 0-7): 6.5,13,19.5, 26, 39,52, 58.5, 72.2 Mbps 7.2,14.4, 21.7, 28.9,43.3, 57.8, 65 Mbps					
Wi-Fi Modulation	BPSK @ 1, 6, 6.5, 7.2 and 9 Mbps QPSK @ 2, 5.5, 11, 12, 13, 14.4,18, 19.5 and 21.7 Mbps 16-QAM @ 24, 26, 28.9, 36, 39 and 43.3 Mbps 64-QAM @ 48, 52, 54, 57.8, 58.5, 65, and 72.2 Mbps					
802.11n Spatial Streams	1x1 SISO (Single Input, Single Output)					
Regulatory Domain Support	FCC (Americas, Parts of Asia, and Middle East) ETSI (Europe, Middle East, Africa, and Parts of Asia) MIC (Japan) (formerly TELEC) KC (Korea) (formerly KCC)					

© Copyright 2015 Laird. All Rights Reserved

Feature	Description
2.4 GHz Frequency Bands	ETSI: 2.4 GHz to 2.483 GHz FCC: 2.4 GHz to 2.483 GHz MIC (Japan): 2.4 GHz to 2.495 GHz KC: 2.4 GHz to 2.483 GHz
2.4 GHz Operating Channels	ETSI:13 (3 non-overlapping) MIC (Japan):14 (4 non-overlapping) FCC:11 (3 non-overlapping) KCC:13 (3 non-overlapping)
5 GHz Frequency Bands	ETSI 5.15 GHz to 5.35 GHz 5.47 GHz to 5.725 GHz FCC 5.15 GHz to 5.35 GHz 5.725 GHz to 5.82 GHz MIC 5.15 GHz to 5.35 GHz KC 5.15 GHz to 5.35 GHz 5.47 GHz to 5.725 GHz 5.725 GHz to 5.82 GHz
5 GHz Operating Channels	ETSI:19 non-overlapping) MIC: 8 non-overlapping FCC: 23 non-overlapping KC: 8 non-overlapping
Transmit Power Note: Transmit power varies according to individual country regulations. All values nominal, +/-2 dBm. Note: Laird 45 series radios support a single spatial stream and 20 MHz wide channels for N rates.	802.11a: 6 Mbps 15 dBm (32 mW) 54 Mbps 12 dBm (16 mW) 802.11b: 1 Mbps 16 dBm (40 mW) 11 Mbps 16 dBm (40 mW) 802.11g: 6 Mbps 16 dBm (40 mW) 54 Mbps 12 dBm (16 mW) 802.11n (2.4 GHz): 6.5 Mbps (MCS0) 16 dBm (40 mW) 65 Mbps (MCS7) 12 dBm (16 mW) 802.11n (5 GHz): 6.5 Mbps (MCS0) 15 dBm (32 mW) 65 Mbps (MCS7) 12 dBm (16 mW)
Typical Receiver Sensitivity Note: All values nominal, +/-3 dBm.	802.11a: 6 Mbps -90 dBm 54 Mbps -73 dBm (PER <=10%) 802.11b: 1 Mbps -89 dBm 11 Mbps -82 dBm (PER <=10%) 802.11g: 6 Mbps -85 dBm 54 Mbps -68 dBm (PER <=10%) 802.11n (2.4 GHz): MCS0 Mbps -86 dBm MCS7 Mbps -65 dBm 802.11n (5 GHz): MCS0 Mbps -90 dBm MCS7 Mbps -70 dBm
Operating Systems Supported	Android, Linux, Windows CE, Windows Mobile (NDIS5)
Security	Standards Wireless Equivalent Privacy (WEP) Wi-Fi Protected Access (WPA) IEEE 802.11i (WPA2) Note: Support for Federal Information Processing Standards (FIPS) is pending. Encryption Wireless Equivalent Privacy (WEP, RC4 Algorithm) Temporal Key Integrity Protocol (TKIP, RC4 Algorithm)

© Copyright 2015 Laird. All Rights Reserved

Feature	Description
	Advanced Encryption Standard (AES, Rijndael Algorithm) Encryption Key Provisioning Static (40-bit and 128-bit lengths) Pre-Shared (PSK) Dynamic 802.1X Extensible Authentication Protocol Types EAP-FAST PEAP-MSCHAPv2 EAP-TLS PEAP-TLS EAP-TTLS LEAP PEAP-GTC
Compliance	ETSI Regulatory Domain EN 300 328 EN 301 489-1 EN 301 489-17 EN 301 893 EN 60950-1 EN 62311 EU 2002/95/EC (RoHS) FCC Regulatory Domain FCC 15.247 DTS – 802.11b/g (Wi-Fi) – 2.4 GHz & 5.8 GHz FCC 15.407 UNII – 802.11a (Wi-Fi) – 2.4 GHz & 5.4 GHz Industry Canada RSS-210 – 802.11a/b/g/n (Wi-Fi) – 2.4 GHz, 5.8 GHz, 5.2 GHz, and 5.4 GHz
Certifications Note: CCX is pending.	Wi-Fi Alliance 802.11a, 802.11b, 802.11g , 802.11n WPA Enterprise WPA2 Enterprise Cisco Compatible Extensions (Version 4)
Warranty	Limited Lifetime
	All specifications are subject to change without notice

© Copyright 2015 Laird. All Rights Reserved

Recommended Operating Conditions and DC Electrical Characteristics

Table 2: Absolute Maximum Ratings

Symbol	Parameter	Min.	Typ.	Max.	Unit
VCC3_3	Power supply voltage with respect to ground	-0.3	-	4.0	V
VDD_IO	Power supply voltage with respect to ground	-0.3	-	4.0	V
Voltage Ripple	+/-2%, 10KHz~100KHz Max. values not exceeding Operating voltage	-	-	2	%
RFin	Maximum RF input (reference to 50 ohm)	-	-	+10	dBm

Table 3: Recommended Operating Conditions

Symbol	Parameter	Min.	Typ.	Max.	Unit
VCC3_3	Power supply voltage with respect to ground	3.14	3.3	3.46	V
VDD_IO	Power supply voltage with respect to ground	1.71 3.14	1.8 3.3	1.89 3.46	V V

Note: VDD_IO is a voltage from the host platform to configure the I/O signal level. It can be set 1.8 or 3.3 V.

SDIO Timing Requirements

The following figure and table display SDIO default mode timing.

Note: The SDIO bus should not exceed a 25 MHz clock rate.

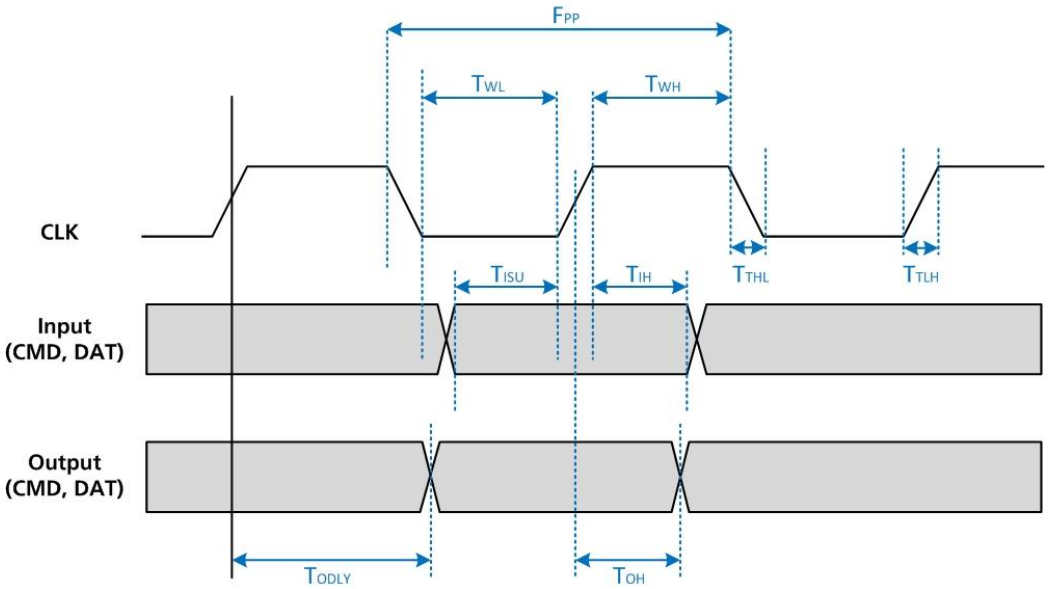

Figure 2: SDIO Default Mode Timing

Note: Timing is based on CL ≤ 40 pF load on CMD and Data.

© Copyright 2015 Laird. All Rights Reserved

Table 4: SDIO Timing Requirements

Symbol	Parameter	Min.	Typ.	Max.	Unit
fPP	Frequency – Data Transfer mode	0	-	50	MHz
tWL	Clock low time	7	-	-	ns
tWH	Clock high time	7	-	-	ns
tTLH	Clock rise time	-	-	10	ns
tTHL	Clock low time	-	-	10	ns
Inputs: CMD, DAT (referenced to CLK)					
tISU	Input setup time	6	-	-	ns
tIH	Input hold time	2	-	-	ns
Outputs: CMD, DAT (referenced to CLK)					
tODLY	Output delay time – Data Transfer mode	0	-	14	ns

© Copyright 2015 Laird. All Rights Reserved

PIN DEFINITIONS

Table 5: Pin Definitions

Pin #	Name	I/O	Default State	Ref.	Description	If Unused
1	GND	-			Ground	Must be connected to GND
2	No Connect	-		-	No internal connection. Leave it open	Leave open
3	BT_PRIORITY	I	Hi-Z	VDD_IO	3-Wire Wi-Fi/BT coexistence signal BT_PRIORITY for Bluetooth coexistence	
4	No Connect	-		-	No internal connection. Leave it open	Leave open
5	No Connect	-		-	No internal connection. Leave it open	Leave open
6	No Connect	-		-	No internal connection. Leave it open	Leave open
7	No Connect	-		-	No internal connection. Leave it open	Leave open
8	No Connect	-		-	No internal connection. Leave it open	Leave open
9	No Connect	-		-	No internal connection. Leave it open	Leave open
10	No Connect	-		-	No internal connection. Leave it open	Leave open
11	No Connect	-		-	No internal connection. Leave it open	Leave open
12	No Connect	-		-	No internal connection. Leave it open	Leave open
13	VCC3_3	-			3.3 V Module Power	
14	No Connect	-		-	No internal connection. Leave it open	Leave open
15	No Connect	-		-	No internal connection. Leave it open	Leave open
16	No Connect	-		-	No internal connection. Leave it open	Leave open
17	No Connect	-		-	No internal connection. Leave it open	Leave open
18	No Connect	-		-	No internal connection. Leave it open	Leave open
19	No Connect	-		-	No internal connection. Leave it open	Leave open
20	No Connect	-		-	No internal connection. Leave it open	Leave open
21	VDD_IO	-			I/O bus voltage configuration; Either 3.3 V or 1.8 V	
22	No Connect	-		-	No internal connection. Leave it open	Leave open
23	No Connect				No internal connection. Leave it open	Leave open
24	No Connect	-		-	No internal connection. Leave it open	Leave open
25	No Connect				No internal connection. Leave it open	Leave open
26	No Connect	-		-	No internal connection. Leave it open	Leave open
27	SDIO_DATA_2	I/O	Pull-H	VDD_IO	SDIO Data2 **Note:** See "Integration Considerations" for additional integration information.	
28	WL_ACTIVE	O	Low	VDD_IO	3-Wire Wi-Fi/BT coexistence signal; WLAN_ACTIVE for Bluetooth coexistence	If not attached to a BT chip, is not pulled high.

© Copyright 2015 Laird. All Rights Reserved

Pin #	Name	I/O	Default State	Ref.	Description	If Unused
29	VCC3_3	-			3.3 V Module Power	
30	GND	-			Ground	Must be connected to GND
31	GND	-			Ground	Must be connected to GND
32	No Connect	-		-	No internal connection. Leave it open	Leave open
33	No Connect	-		-	No internal connection. Leave it open	Leave open
34	No Connect	-		-	No internal connection. Leave it open	Leave open
35	No Connect	-		-	No internal connection. Leave it open	Leave open
36	BT_ACTIVE	I	Hi-Z	VDD_IO	3-Wire Wi-Fi/BT coexistence signal; BT_ACTIVE for Bluetooth coexistence	
37	No Connect	-		-	No internal connection. Leave it open	Leave open
38	No Connect	-		-	No internal connection. Leave it open	Leave open
39	No Connect	-		-	No internal connection. Leave it open	Leave open
40	No Connect	-		-	No internal connection. Leave it open	Leave open
41	No Connect	-		-	No internal connection. Leave it open	Leave open
42	WL_LED_ACT/ ANTE	O	LOW	VCC3_3	Used for the following: ▪ Antenna switch control signal when sharing antenna with BT signal. See "Sharing Antenna Implementation" for more information. ▪ LED indicator for Wi-Fi is active (sending a signal).	
43	No Connect	-		-	No internal connection. Leave it open	Leave open
44	No Connect	-		-	No internal connection. Leave it open	Leave open
45	No Connect	-		-	No internal connection. Leave it open	Leave open
46	No Connect	-		-	No internal connection. Leave it open	Leave open
47	No Connect	-		-	No internal connection. Leave it open	Leave open
48	CHIP_PWD_L	I	Pull-H	VDD_IO	Input signal to power down the module. Active low See Note 1. See Note Regarding CHIP_PWD_L.	
49	No Connect	-		-	No internal connection. Leave it open	Leave open
50	No Connect	-		-	No internal connection. Leave it open	Leave open
51	No Connect	-		-	No internal connection. Leave it open	Leave open
52	No Connect	-		-	No internal connection. Leave it open	Leave open
53	No Connect	-		-	No internal connection. Leave it open	Leave open

© Copyright 2015 Laird. All Rights Reserved

Pin #	Name	I/O	Default State	Ref.	Description	If Unused
54	No Connect	-		-	No internal connection. Leave it open	Leave open
55	SDIO_CMD	I/O	Pull-H	VDD_IO	SDIO Command	
56	SDIO_CLK	I	Hi-Z	VDD_IO	SDIO Clock (25 MHz max)	
57	SDIO_DATA_0	I/O	Pull-H	VDD_IO	SDIO Data 0	
58	SDIO_DATA_3	I/O	Pull-H	VDD_IO	SDIO Data 3	
59	SDIO_DATA_1	I/O	Pull-H	VDD_IO	SDIO Data 1	
60	GND	-			Ground	Must be connected to GND

Note 1: If the following lines are available on the radio you are integrating into your system, you must connect and control them with the host device.

- CHIP_PWD_L
- SYS_RST_L
- BT_RST_L
- VDDIO_DR

If the radio stays powered up and the host goes down or is reset, communications cannot be re-established with the radio. The host SDIO controller must re-establish communication with the radio by reloading the radio firmware after a power-on or a reset.

Note Regarding CHIP_PWD_L: During power on/down period, the CHIP_PWD_L must be held in low state longer than 5 µsec (T_A and T_B) after the VCC3_3 reaches its high state. See Figure 3.

To reset the MSD45N, set the CHIP_PWD_L in low state longer than 5 µsec (T_C). See Figure 4.

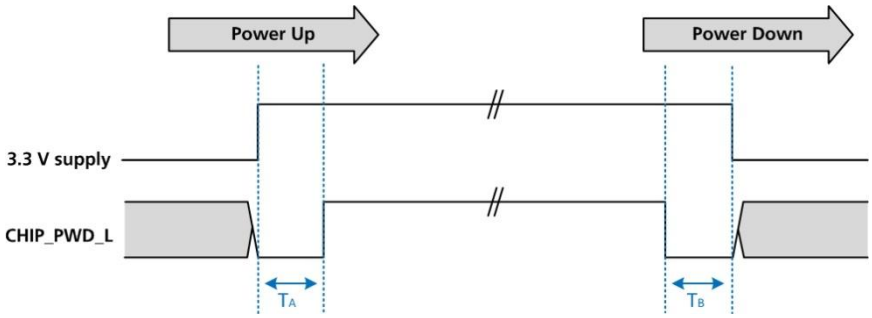

Figure 3: Power on/down timing

© Copyright 2015 Laird. All Rights Reserved

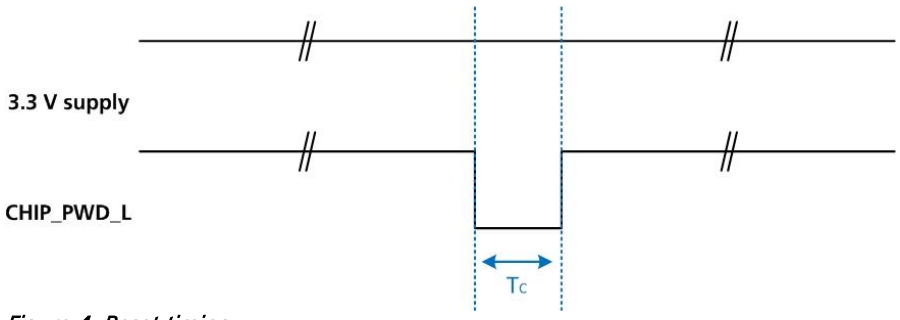

Figure 4: Reset timing

MSD40NBT and MSD45N Pin Comparison Table

Pin #	Pin Name MSD40NBT	Pin Name MSD45N	Pin #	Pin Name MSD40NBT	Pin Name MSD45N
1	GND	GND	31	GND	GND
2	BT_UART_TXD	No Connect	32	BT_RST_L	No Connect
3	BT_PRIORITY	BT_PRIORITY	33	No Connect	No Connect
4	BT_GPIO_6	No Connect	34	No Connect	No Connect
5	BT_UART_RTS_N	No Connect	35	No Connect	No Connect
6	BT_UART_RXD	No Connect	36	RSVD	BT_ACTIVE
7	BT_HOST_WAKE_B	No Connect	37	No Connect	No Connect
8	RSVD	No Connect	38	No Connect	No Connect
9	RSVD	No Connect	39	No Connect	No Connect
10	BT_PCM_OUT	No Connect	40	No Connect	No Connect
11	BT_UART_CTS_N	No Connect	41	No Connect	No Connect
12	BT_WAKE_B	No Connect	42	RSVD	WL_LED_ACT/ANTE
13	VCC3_3	VCC3_3	43	No Connect	No Connect
14	No Connect	No Connect	44	No Connect	No Connect
15	No Connect	No Connect	45	No Connect	No Connect
16	No Connect	No Connect	46	No Connect	No Connect
17	No Connect	No Connect	47	No Connect	No Connect
18	No Connect	No Connect	48	CHIP_PWD_L	CHIP_PWD_L
19	No Connect	No Connect	49	No Connect	No Connect
20	BT_PCM_SYNC	No Connect	50	RSVD	No Connect
21	No Connect	VDD_IO	51	No Connect	No Connect
22	BT_PCM_IN	No Connect	52	RSVD	No Connect
23	No Connect	No Connect	53	RSVD	No Connect
24	BT_PCM_CLK	No Connect	54	RSVD	No Connect
25	No Connect	No Connect	55	SDIO_CMD	SDIO_CMD
26	SYS_RST_L	No Connect	56	SDIO_CLK	SDIO_CLK
27	SDIO_DATA_2	SDIO_D2	57	SDIO_DATA_0	SDIO_D0
28	RSVD	WL_ACTIVE	58	SDIO_DATA_3	SDIO_D3
29	VCC3_3	VCC3_3	59	SDIO_DATA_1	SDIO_D1
30	GND	GND	60	GND	GND

© Copyright 2015 Laird. All Rights Reserved

Integration Considerations

The following Wi-Fi information should be taken into consideration when integrating the MSD45N.

Series resistors are recommended in all six SDIO lines (27-56 ohms typically):

- SDIO_CLK
- SDIO_CMD
- SDIO_DATA_0
- SDIO_DATA_1
- SDIO_DATA_2
- SDIO_DATA_3

Note: Although these values may vary with the properties of your host interface and the PCB, they are a reasonable starting point.

Note: The series resistors in the SDIO bus provide several design benefits:

- If a host controller has too high of a drive strength, then bus ringing may result. Series resistors can reduce this ringing on the I/O lines.
- Adding 27-56 ohms of series resistance on the SDIO bus will reduce sharp transitional edges, which may reduce EMI.
- Having the series resistors in the PCB layout allows for design flexibility; if they are later found to be unnecessary, zero (0) ohm jumpers may be used in their place.

Also note the following:

- Rout the SDIO bus as short and as similar in length as possible.
- Keep the clock trace separate from other signal traces.

Notes: No pull-up is required on the CLK line.

Make sure to apply the proper voltage on the VDD_IO input to the SiP to match the signalling voltage of the SDIO host interface (1.8V or 3.3V typically, but it can be anything in between these values).

The SDIO host must wait a minimum of 5 µsec before initiating access to the MSD45N after VCC3_3 ramps up and settles

© Copyright 2015 Laird. All Rights Reserved

Mechanical Specifications

Connector Overview

MSD45N connector: Molex 54722-0607 60-pin connector

Mating connector (on board): Molex 55560-0607 60-pin connector

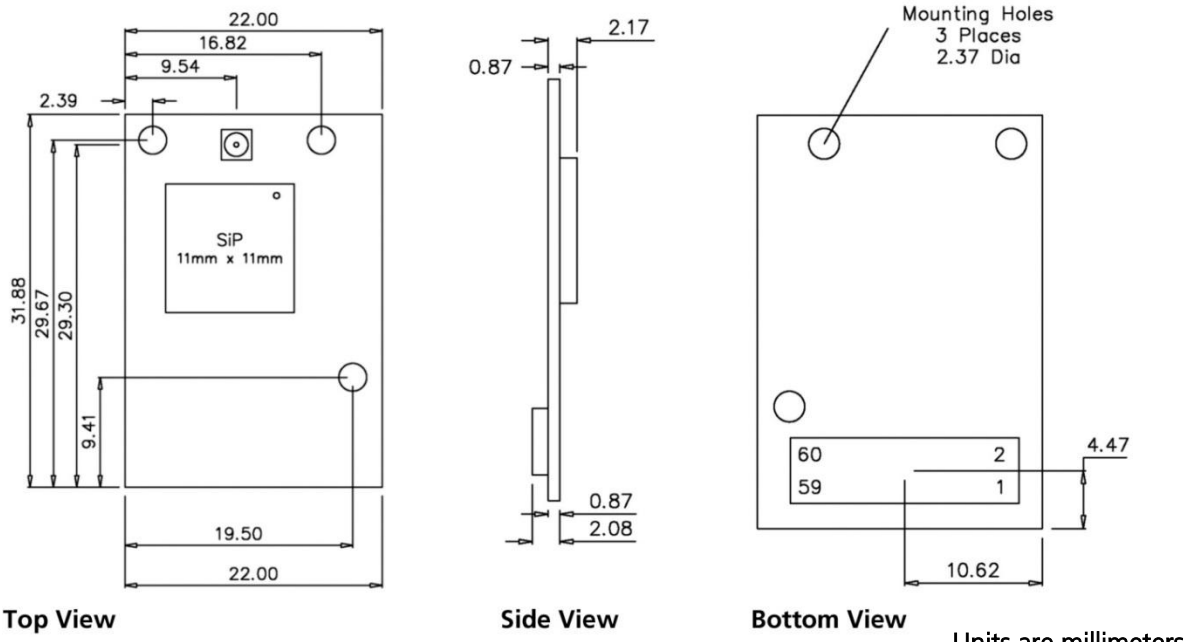

Figure 5: Mechanical Drawing

MSD45N Attached to T-Board

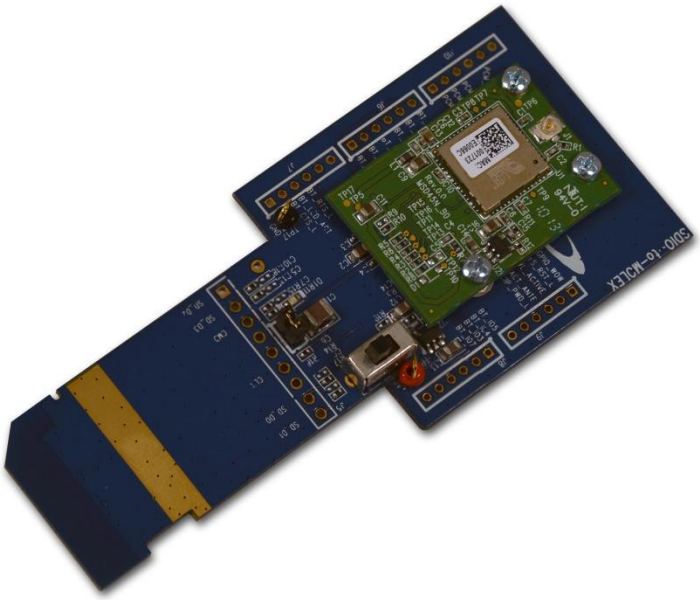

Figure 6: MSD45N attached to T-board

© Copyright 2015 Laird. All Rights Reserved

Mounting

The MSD45N connects to the host via a 60-pin connector. In addition, there are three mounting holes used to secure the device to the host using 2 mm mounting screws.

Laird recommends a 1.5 mm metal spacer (bushing) with a conductive mounting screw to connect the exposed ground pads of the radio circuit board to the host ground plane. A 1.5 mm conductive metal spacer with a maximum OD of 4 mm maximizes grounding of the radio and helps to reduce emissions from the radio circuit board. The spacer may also prevent the MSD board from slanting and breaking the connection to the host device when the board is attached to the host.

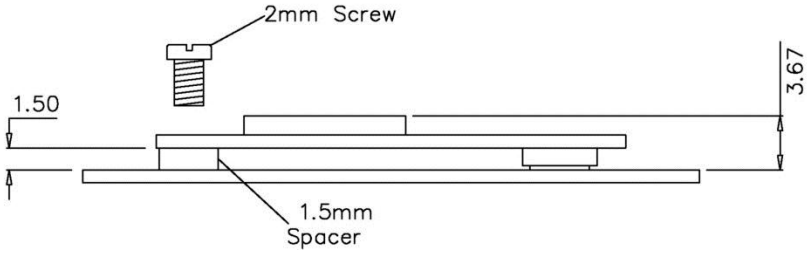

Figure 7: Mounting Recommendations

RF Layout Design Guidelines

The following is a list of RF layout design guidelines and recommendation when installing a Laird radio into your device.

- Do not run antenna cables directly above or directly below the radio.
- Do not place any parts or run any high speed digital lines below the radio.
- If there are other radios or transmitters located on the device (such as a Bluetooth radio), place the devices as far apart from each other as possible.
- Ensure that there is the maximum allowable spacing separating the antenna connectors on the Laird radio from the antenna. In addition, do not place antennas directly above or directly below the radio.
- Laird recommends the use of a double shielded cable for the connection between the radio and the antenna elements.
- Laird has provided three plated mounting holes that can be used for grounding. When additional ground plane is required, you may use some or all of these grounded mounting holes.
- Use proper electro-static-discharge (ESD) procedures when installing the Laird radio module.

© Copyright 2015 Laird. All Rights Reserved

REGULATORY

Certified Antennas

The MSD45N will be tested to the regulatory standards defined in the "Certifications" section of the Specifications table above. Laird Technologies plans to conduct these tests with the following antennas:

Model	Type	Connector	Maximum Gain
MAG.LAYERS EDA-1513-25GR2-B2-CY	Dipole	SMA Jack Reverse	2 dBi
MAG.LAYERS PCA-4606-2G4C1-A13-CY	PCB Dipole	TNOV	2.2 dBi
Laird NanoBlade-IP04	PCB Dipole	IPEX MHF	2.4-2.5 GHz: 2 dBi 5.15-5.35 GHz: 3.9 dBi 5.6 GHz: 4 dBi
Laird MAF95310 Mini NanoBlade Flex	PCB Dipole	IPEX MHF	2.4 GHz: 2.79 dBi 5 GHz: 3.38 dBi
Laird NanoBlue-IP04	PCB Dipole	IPEX MHF	2.5 GHz only: 2 dBi
Ethertronics WLAN_1000146	Magnetic Dipole	IPEX MHF	2.4-2.5 GHz: 2 dBi 4.9-5.1 GHz: 3.5 dBi 5.15-5.35 GHz: 3.5 dBi 5.7-5.9 GHz: 3.5 dBi

Antennas of differing types and higher gains may be integrated as well. If necessary, with the Laird Manufacturing Utility software utility, OEMs may reduce the transmit power of the MSD45N to account for higher antenna gain. In some cases, OEMs may be able to reduce certification efforts by using antennas that are of like type and equal or lesser gain to the above listed antennas.

Documentation Requirements

In order to maintain regulatory compliance, when integrating the Laird MSD45N into a host device and leveraging Laird's grants and certifications, it is necessary to meet the documentation requirements set forth by the applicable regulatory agencies. The following sections (FCC, Industry Canada, and European Union) outline the information that may be included in the user's guide and external labels for the host devices into which the MSD45N is integrated.

FCC

Note: You must place "Contains FCC ID: SQG-MSD45N" on the host product in such a location that it can be seen by an operator at the time of purchase.

User's Guide Requirements

When integrating the MSD45N into a host device, the integrator must include specific information in the user's guide for the device into which the MSD45N is integrated. The integrator must not provide information to the end user regarding how to install or remove this RF module in the user's manual of the device into which the MSD45N is integrated. The following FCC statements must be added in their entirety and without modification into a prominent place in the user's guide for the device into which the MSD45N is integrated:

© Copyright 2015 Laird. All Rights Reserved

Federal Communication Commission Interference Statement

This equipment has been tested and found to comply with the limits for a Class B digital device, pursuant to Part 15 of the FCC Rules. These limits are designed to provide reasonable protection against harmful interference in a residential installation. This equipment generates, uses, and can radiate radio frequency energy and, if not installed and used in accordance with the instructions, may cause harmful interference to radio communications. However, there is no guarantee that interference will not occur in a particular installation. If this equipment does cause harmful interference to radio or television reception, which can be determined by turning the equipment off and on, the user is encouraged to try to correct the interference by one of the following measures:

1. Reorient or relocate the receiving antenna.
2. Increase the separation between the equipment and receiver.
3. Connect the equipment into an outlet on a circuit different from that to which the receiver is connected.
4. Consult the dealer or an experienced radio/TV technician for help.

FCC Caution: Any changes or modifications not expressly approved by the party responsible for compliance could void the user's authority to operate this equipment.

This device complies with Part 15 of the FCC Rules. Operation is subject to the following two conditions: (1) This device may not cause harmful interference, and (2) this device must accept any interference received, including interference that may cause undesired operation.

This device is restricted to *indoor* use when operated in the 5.15 to 5.25 GHz frequency range.

FCC requires this product to be used indoors for the frequency range 5.15 to 5.25 GHz to reduce the potential for harmful interference to co-channel Mobile Satellite systems.

This device does not permit operations on channels 116-128 (5580 – 5640 MHz) for 11na and 120-128 (5600-5640 MHz) for 11a which overlap the 5600 -5650 MHz band.

IMPORTANT NOTE: FCC Radiation Exposure Statement:

This equipment complies with FCC radiation exposure limits set forth for an uncontrolled environment. This equipment should be installed and operated with minimum distance 20cm between the radiator & your body.

This device is intended only for OEM integrators under the following conditions:

- The antenna must be installed such that 20 cm is maintained between the antenna and users, and
- The transmitter module may not be co-located with any other transmitter or antenna,
- For all products marketed in the United States, the OEM must limit the operation channels from CH1 to CH11 for 2.4 GHz band by the supplied firmware programming tool. The OEM shall not supply any tool or information to the end-user regarding Regulatory Domain change.

As long as the three conditions above are met, further transmitter testing is not required. However, the OEM integrator is still responsible for testing their end-product for any additional compliance requirements required with this module installed.

© Copyright 2015 Laird. All Rights Reserved

IMPORTANT NOTE:	In the event that these conditions cannot be met (for example, certain laptop configurations or co-location with another transmitter), then the FCC authorization is no longer considered valid and the FCC ID cannot be used on the final product. In these circumstances, the OEM integrator is responsible for re-evaluating the end product (including the transmitter) and obtaining a separate FCC authorization.

End Product Labeling

This transmitter module is authorized only for use in device where the antenna is installed such that 20 cm is maintained between the antenna and users. The final end product must be labeled in a visible area with the following: "Contains FCC ID: SQG-MSD45N".

Manual Information to the End User

The OEM integrator may NOT provide information to the end user regarding how to install or remove this RF module in the user's manual of the end product which integrates this module.

The end user manual shall include all required regulatory information/warnings as show in this Hardware Integration Guide.

Industry Canada

Note:	You must place "Contains IC ID: 3147A-MSD45N" on the host product in such a location that it can be seen by an operator at the time of purchase.

User's Guide Requirements (for Model # MSD45N)

RF Radiation Hazard Warning

To ensure compliance with FCC and Industry Canada RF exposure requirements, this device must be installed in a location where the antennas of the device will have a minimum distance of at least 20 cm from all persons. Using higher gain antennas and types of antennas not certified for use with this product is not allowed. The device shall not be co-located with another transmitter.

Installez l'appareil en veillant à conserver une distance d'au moins 20 cm entre les éléments rayonnants et les personnes. Cet avertissement de sécurité est conforme aux limites d'exposition définies par la norme CNR-102 at relative aux fréquences radio.

Maximum Antenna Gain – If the integrator configures the device such that the antenna is detectable from the host product.

This radio transmitter (identify the device by certification number, or model number if Category II) has been approved by Industry Canada to operate with the antenna types listed below with the maximum permissible gain and required antenna impedance for each antenna type indicated. Antenna types not included in this list, having a gain greater than the maximum gain indicated for that type, are strictly prohibited for use with this device.

Antenna list refer to Certified Antennas.

Le présent émetteur radio (IC: XXXXX-XXXXXXXXX) a été approuvé par Industrie Canada pour fonctionner avec les types d'antenne énumérés ci-dessous et ayant un gain admissible maximal et l'impédance requise pour chaque type d'antenne. Les types d'antenne non inclus dans cette liste, ou dont le gain est supérieur au gain maximal indiqué, sont strictement interdits pour l'exploitation de l'émetteur.

Le présent appareil est conforme aux CNR d'Industrie Canada applicables aux appareils radio exempts de licence. L'exploitation est autorisée aux deux conditions suivantes : (1) l'appareil ne doit pas produire de

© Copyright 2015 Laird. All Rights Reserved

brouillage, et (2) l'utilisateur de l'appareil doit accepter tout brouillage radioélectrique subi, même si le brouillage est susceptible d'en compromettre le fonctionnement.

This device is intended only for OEM integrators under the following conditions:

- The antenna must be installed such that 20 cm is maintained between the antenna and users, and
- The transmitter module may not be co-located with any other transmitter or antenna.

As long as 2 conditions above are met, further transmitter test will not be required. However, the OEM integrator is still responsible for testing their end-product for any additional compliance requirements required with this module installed.

Cet appareil est conçu uniquement pour les intégrateurs OEM dans les conditions suivantes:

- L'antenne doit être installée de telle sorte qu'une distance de 20 cm est respectée entre l'antenne et les utilisateurs, et
- Le module émetteur peut ne pas être coïmplanté avec un autre émetteur ou antenne.

Tant que les 2 conditions ci-dessus sont remplies, des essais supplémentaires sur l'émetteur ne seront pas nécessaires. Toutefois, l'intégrateur OEM est toujours responsable des essais sur son produit final pour toutes exigences de conformité supplémentaires requis pour ce module installé.

IMPORTANT NOTE:

In the event that these conditions cannot be met (for example certain laptop configurations or co-location with another transmitter), then the Canada authorization is no longer considered valid and the IC ID can not be used on the final product. In these circumstances, the OEM integrator will be responsible for re-evaluating the end product (including the transmitter) and obtaining a separate Canada authorization.

NOTE IMPORTANTE:

Dans le cas où ces conditions ne peuvent être satisfaites (par exemple pour certaines configurations d'ordinateur portable ou de certaines co-localisation avec un autre émetteur), l'autorisation du Canada n'est plus considéré comme valide et l'ID IC ne peut pas être utilisé sur le produit final. Dans ces circonstances, l'intégrateur OEM sera chargé de réévaluer le produit final (y compris l'émetteur) et l'obtention d'une autorisation distincte au Canada.

End Product Labeling

This transmitter module is authorized only for use in device where the antenna may be installed such that 20 cm may be maintained between the antenna and users. The final end product must be labeled in a visible area with the following: “Contains IC: ”.

Plaque signalétique du produit final

Ce module émetteur est autorisé uniquement pour une utilisation dans un dispositif où l'antenne peut être installée de telle sorte qu'une distance de 20cm peut être maintenue entre l'antenne et les utilisateurs. Le produit final doit être étiqueté dans un endroit visible avec l'inscription suivante: "Contient des IC: ".

Manual Information To the End User

© Copyright 2015 Laird. All Rights Reserved

The OEM integrator has to be aware not to provide information to the end user regarding how to install or remove this RF module in the user's manual of the end product which integrates this module.

The end user manual shall include all required regulatory information/warning as show in this manual.

Manuel d'information à l'utilisateur final

L'intégrateur OEM doit être conscient de ne pas fournir des informations à l'utilisateur final quant à la façon d'installer ou de supprimer ce module RF dans le manuel de l'utilisateur du produit final qui intègre ce module.
Le manuel de l'utilisateur final doit inclure toutes les informations réglementaires requises et avertissements comme indiqué dans ce manuel.

European Union

User's Guide Requirements

The integrator must include specific information in the user's guide for the device into which the MSD45N is integrated. In addition to the required FCC and IC statements outlined above, the following R&TTE statements must be added in their entirety and without modification into a prominent place in the user's guide for the device into which the MSD45N is integrated:

This device complies with the essential requirements of the R&TTE Directive 1999/5/EC. The following test methods have been applied in order to prove presumption of conformity with the essential requirements of the R&TTE Directive 1999/5/EC:

- EN60950-1:2006+A11+A1+A12:2011
  Safety of Information Technology Equipment
- EN 62311: 2008 / Article 3(1)(a) and Article 2 2006/95/EC)
  Assessment of electronic and electrical equipment related to human exposure restrictions for electromagnetic fields (0 Hz-300 GHz)
- EN 300 328 V1.8.1: 2012-06
  Electromagnetic compatibility and Radio spectrum Matters (ERM); Wideband transmission systems; Data transmission equipment operating using wide band modulation techniques; Harmonized EN covering the essential requirements of article 3.2 of the R&TTE Directive
- EN 301 893 V1.7.1: 2012-06
  Broadband Radio Access Networks (BRAN); 5 GHz high performance RLAN; Harmonized EN covering the essential requirements of article 3.2 of the R&TTE Directive
- EN 301 489-1 V1.9.2: 2011
  Electromagnetic compatibility and Radio spectrum Matters (ERM); ElectroMagnetic Compatibility (EMC) standard for radio equipment and services; Part 1: Common technical requirements
- EN 301 489-17 V2.2.1 2012
  Electromagnetic compatibility and Radio spectrum Matters (ERM); ElectroMagnetic Compatibility (EMC) standard for radio equipment; Part 17: Specific conditions for Broadband Data Transmission Systems

This device is a 2.4 GHz wideband transmission system (transceiver), intended for use in all EU member states and EFTA countries, except in France and Italy where restrictive use applies.

In Italy the end-user should apply for a license at the national spectrum authorities in order to obtain authorization to use the device for setting up outdoor radio links and/or for supplying public access to telecommunications and/or network services.

© Copyright 2015 Laird. All Rights Reserved

This device may not be used for setting up outdoor radio links in France and in some areas the RF output power may be limited to 10 mW EIRP in the frequency range of 2454 – 2483.5 MHz. For detailed information the end-user should contact the national spectrum authority in France.

cs **Česky** [Czech]	*[Jméno výrobce]* tímto prohlašuje, že tento *[typ zařízení]* je ve shodě se základními požadavky a dalšími příslušnými ustanoveními směrnice 1999/5/ES.
da Dansk [Danish]	Undertegnede *[fabrikantens navn]* erklærer herved, at følgende udstyr *[udstyrets typebetegnelse]* overholder de væsentlige krav og øvrige relevante krav i direktiv 1999/5/EF.
de Deutsch [German]	Hiermit erklärt *[Name des Herstellers]*, dass sich das Gerät *[Gerätetyp]* in Übereinstimmung mit den grundlegenden Anforderungen und den übrigen einschlägigen Bestimmungen der Richtlinie 1999/5/EG befindet.
et Eesti [Estonian]	Käesolevaga kinnitab *[tootja nimi = name of manufacturer]* seadme *[seadme tüüp = type of equipment]* vastavust direktiivi 1999/5/EÜ põhinõuetele ja nimetatud direktiivist tulenevatele teistele asjakohastele sätetele.
en English	Hereby, *[name of manufacturer]*, declares that this *[type of equipment]* is in compliance with the essential requirements and other relevant provisions of Directive 1999/5/EC.
es Español [Spanish]	Por medio de la presente *[nombre del fabricante]* declara que el *[clase de equipo]* cumple con los requisitos esenciales y cualesquiera otras disposiciones aplicables o exigibles de la Directiva 1999/5/CE.
el **Ελληνική** [Greek]	ΜΕ ΤΗΝ ΠΑΡΟΥΣΑ *[name of manufacturer]* ΔΗΛΩΝΕΙ ΟΤΙ *[type of equipment]* ΣΥΜΜΟΡΦΩΝΕΤΑΙ ΠΡΟΣ ΤΙΣ ΟΥΣΙΩΔΕΙΣ ΑΠΑΙΤΗΣΕΙΣ ΚΑΙ ΤΙΣ ΛΟΙΠΕΣ ΣΧΕΤΙΚΕΣ ΔΙΑΤΑΞΕΙΣ ΤΗΣ ΟΔΗΓΙΑΣ 1999/5/ΕΚ.
fr Français [French]	Par la présente *[nom du fabricant]* déclare que l'appareil *[type d'appareil]* est conforme aux exigences essentielles et aux autres dispositions pertinentes de la directive 1999/5/CE.
it Italiano [Italian]	Con la presente *[nome del costruttore]* dichiara che questo *[tipo di apparecchio]* è conforme ai requisiti essenziali ed alle altre disposizioni pertinenti stabilite dalla direttiva 1999/5/CE.
Latviski [Latvian]	Aršo*[name of manufacturer /izgatavotājanosaukums]* deklarē, ka*[type of equipment / iekārtas tips]*atbilstDirektīvas 1999/5/EK būtiskajāmprasībām un citiemar to saistītajiemnoteikumiem.
Lietuvių [Lithuanian]	Šiuo *[manufacturer name]* deklaruoja, kad šis *[equipment type]* atitinka esminius reikalavimus ir kitas 1999/5/EB Direktyvos nuostatas.
nl Nederlands [Dutch]	Hierbij verklaart *[naam van de fabrikant]* dat het toestel *[type van toestel]* in overeenstemming is met de essentiële eisen en de andere relevante bepalingen van richtlijn 1999/5/EG.
mt Malti [Maltese]	Hawnhekk, *[isem tal-manifattur]*, jiddikjara li dan *[il-mudel tal-prodott]* jikkonforma mal-ħtiġijiet essenzjali u ma provvedimenti oħrajn relevanti li hemm fid-Dirrettiva 1999/5/EC.
hu Magyar [Hungarian]	Alulírott, *[gyártó neve]* nyilatkozom, hogy a *[... típus]*megfelel a vonatkozó alapvetõ követelményeknek és az 1999/5/EC irányelv egyéb elõírásainak.

© Copyright 2015 Laird. All Rights Reserved

pl Polski [Polish]	Niniejszym *[nazwa producenta]* oświadcza, że *[nazwa wyrobu]* jest zgodny z zasadniczymi wymogami oraz pozostałymi stosownymi postanowieniami Dyrektywy 1999/5/EC.
pt Português [Portuguese]	*[Nome do fabricante]* declara que este *[tipo de equipamento]* está conforme com os requisitos essenciais e outras disposições da Directiva 1999/5/CE.
sl Slovensko [Slovenian]	*[Ime proizvajalca]* izjavlja, da je ta *[tip opreme]* v skladu z bistvenimi zahtevami in ostalimi relevantnimi določili direktive 1999/5/ES.
Slovensky [Slovak]	*[Menovýrobcu]*týmtovyhlasuje, že*[typzariadenia]*spĺňazákladnépožiadavky a všetkypríslušnéustanoveniaSmernice 1999/5/ES.
fi Suomi [Finnish]	*[Valmistaja = manufacturer]* vakuuttaa täten että *[type of equipment = laitteen tyyppimerkintä]* tyyppinen laite on direktiivin 1999/5/EY oleellisten vaatimusten ja sitä koskevien direktiivin muiden ehtojen mukainen.
sv Svenska [Swedish]	Härmed intygar *[företag]* att denna *[utrustningstyp]* står I överensstämmelse med de väsentliga egenskapskrav och övriga relevanta bestämmelser som framgår av direktiv 1999/5/EG.

Labeling Requirements

The final end product must be labeled in a visible area with the following notice:

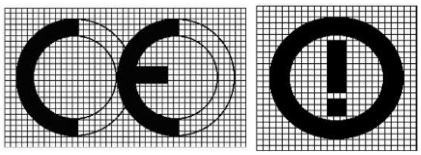

© Copyright 2015 Laird. All Rights Reserved

APPENDIX A: SCHEMATIC

The following MSD45N schematic may be used as a reference.

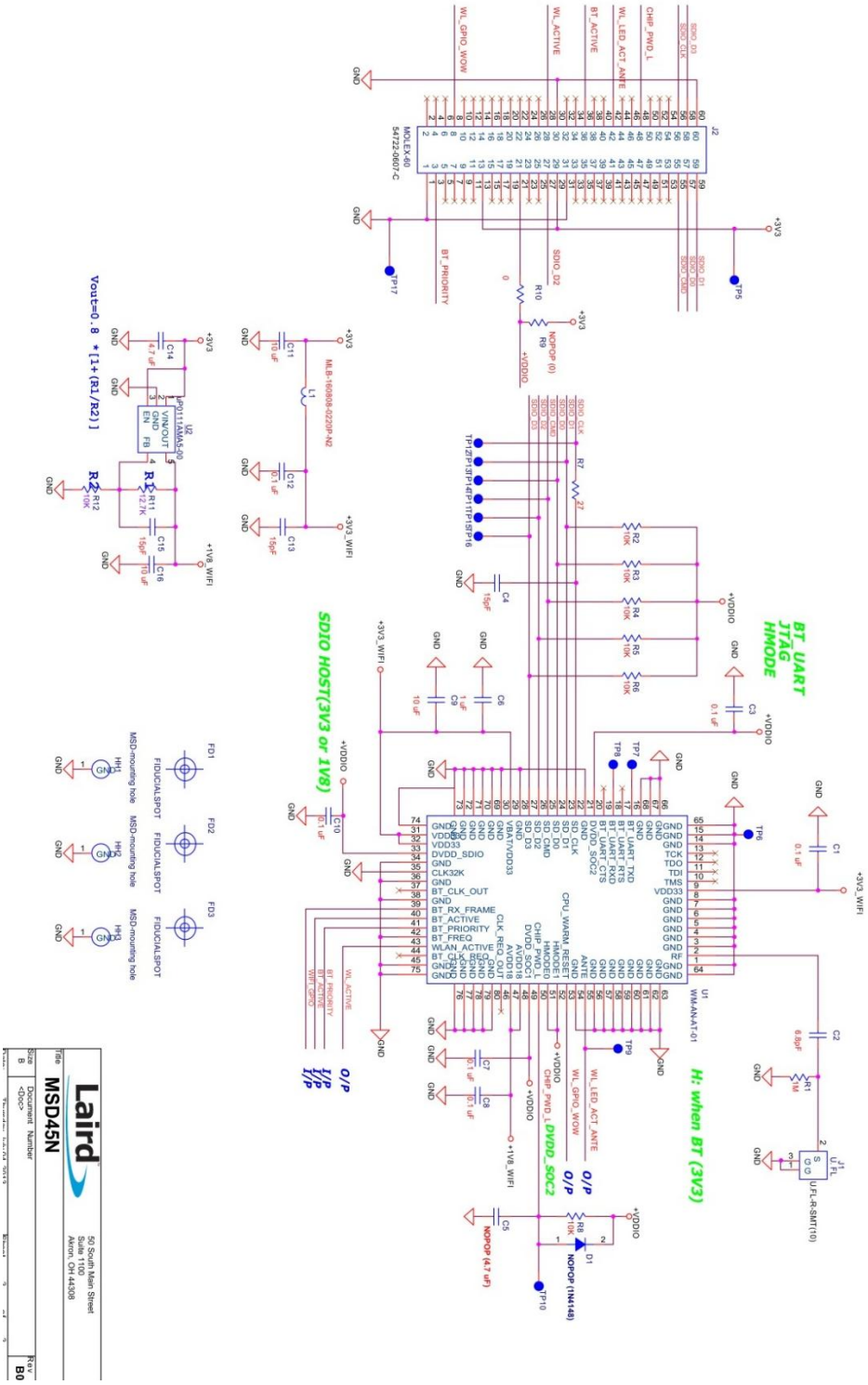

Figure 8: Laird MSD45N Schematic

© Copyright 2015 Laird. All Rights Reserved

Mouser Electronics

Authorized Distributor

Click to View Pricing, Inventory, Delivery & Lifecycle Information:

Laird Connectivity:

WH-MSD45N