CML Microcircuits

COMMUNICATION SEMICONDUCTORS

CMX838

FRS/PMR446/GMRS Family Radio Processor

D/838/8 September 2003 Provisional Issue

Features and Applications

- **Advanced one-of-any CTCSS subaudio 50 tone processor**
  - **Fast decode time**
  - **IRQ on any / all valid tones**
  - **Fast scan, group calling, auto response tone select and Tone Cloning™ support**
  - **Supply Independent output level**
- **RF Synthesizer**
  - **FRS, PMR446 and GMRS RF channels**
  - **Configurable charge pump**
- **Audio call tone generator**
- **Audio processing**
  - **Mic amplifier**
  - **Pre/De-emphasis**
  - **Limiter with Supply Independent output level**
  - **Post limiter filtering**
  - **Mic, Rx, and Tx digital gain controls**
  - **Single and Dual Tx outputs**
- **Signal source and external function switches**
- **Low power, 3V to 5V supply**
  - **Powersave and sleep modes**
- **Serial control interface**

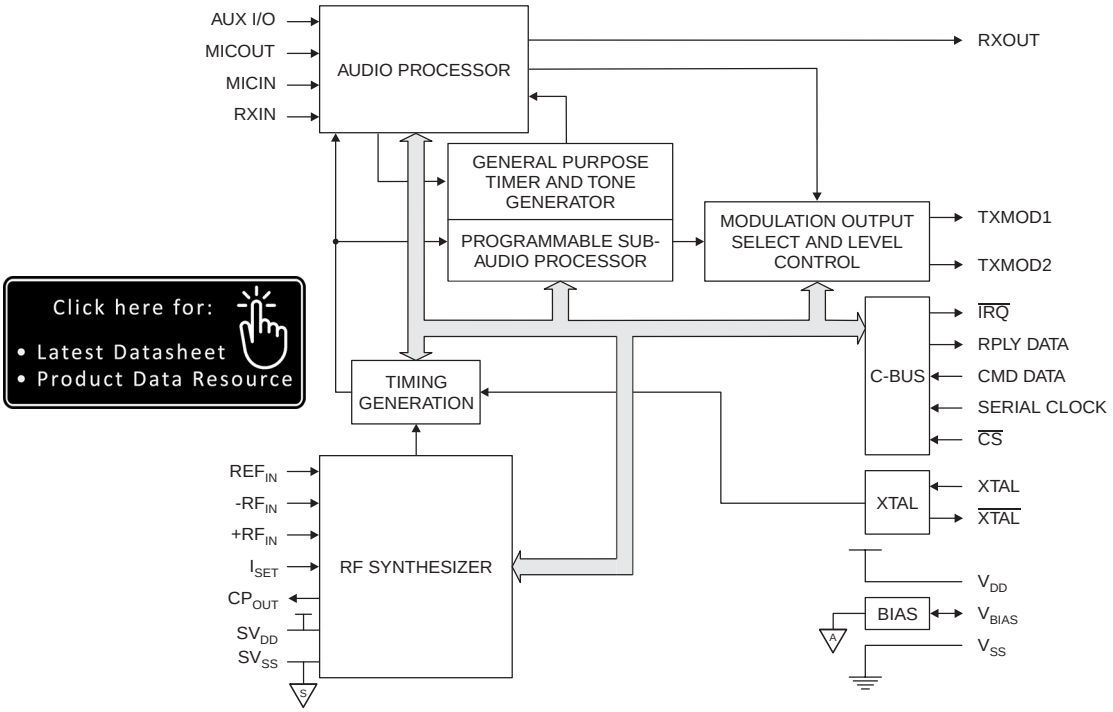

Click here for:
- Latest Datasheet
- Product Data Resource

The highly integrated CMX838 Family Radio Processor includes subaudio, audio, and synthesizer functions to serve as the core engine for low cost, high performance FRS, PMR446, and GMRS radio designs. Its flexibility supports both simple and advanced multi-channel radios without cost penalties. Integrated Tx voltage reference and baseband clock generation circuits eliminate the need for external components. The CMX838's features directly supports advanced end product functions such as: group calling, scanning, automatic scanner response tone setup, and Tone Cloning™.

By using the CMX838 one global radio design can support multiple standards and markets.

Controlled via a serial interface (C-BUS) the Family Radio Processor operates from a 3V to 5V supply and is available in 28-pin TSSOP (CMX838E1) and 28-pin SOIC (CMX838D1) packages.

© 2003 CML Microsystems Plc

CONTENTS

Section **Page**

1 Block Diagram 6

2 Signal List 7

3 External Components 9

4 General Description 10

4.1 Audio 10

4.1.1 Digitally Controlled Amplifiers (DCA) 10

4.1.2 Transmit Input Amplifier 11

4.1.3 Audio Switched Capacitor Filters 11

4.1.3.1 Pre-emphasis/Low-pass Filter 12

4.1.3.2 High-pass Filter 13

4.1.3.3 Deviation Limiter Low-pass Filter 13

4.1.4 De-emphasis 14

4.1.5 Transmit Audio Path 14

4.1.6 Receive Audio Path 15

4.1.7 Audio Path without De-emphasis or Pre-emphasis 15

4.1.8 Deviation Limiter 16

4.2 Tone Signaling Processor 17

4.2.1 Tone encoding/decoding 17

4.2.2 Subaudio RX and TX Filter Characteristics 18

4.2.3 CTCSS Subaudio Decoder and Encoder Tone Set 20

4.2.4 Tone Signaling Processor Configuration Task Descriptions 21

4.2.4.1 Normal Run Mode (Task 0) 21

4.2.4.2 Reserved For Test (Task 1-3) 21

4.2.4.3 RX Configuration 22

4.2.4.4 TX Configuration 23

4.2.4.5 Initialize and Configure 24

4.3 RF Synthesizer 26

4.3.1 Operating Range and Specifications 26

4.3.2 Main Divider 26

4.3.3 Phase Detector & Charge Pump 26

4.3.4 Lock Detect Output 27

4.3.5 Reference Circuits 27

4.4 Baseband Timing Generation 27

5 Software Programming 28

5.1 C-BUS Serial Interface 28

5.1.1 8-Bit C-BUS Register Map 29

5.1.2 16-Bit C-BUS Register Map 30

5.1.2.1 GENERAL RESET ($01) 30

5.1.2.2 SETUP Register ($80) 31

5.1.2.3 AUDIO CONTROL Register ($81) 32

5.1.2.4 RX AUDIO LEVEL CONTROL Register ($82) 33

5.1.2.5 AUDIO POWER AND BANDWIDTH CONTROL Register ($83) 34
5.1.2.6 TXMOD 1 & 2 CONTROL Register ($88) 35
5.1.2.7 SYNTHESIZER BASEBAND CLK CONTROL Register ($89) 37
5.1.2.8 SYNTHESIZER GENERAL CONTROL Register ($8A) 38
5.1.2.9 SYNTHESIZER CHANNEL SELECT Register ($8B) 39
5.1.2.10 SYNTHESIZER STATUS Register ($8C) 39
5.1.2.11 SYNTHESIZER 1ST IF OFFSET Register ($8D) 40
5.1.2.12 16 BIT SUBAUDIO TASK DATA Register ($8E) 40
5.1.2.13 16 BIT SUBAUDIO TEST DATA Register ($8F) 40
5.1.2.14 SYNTHESIZER TEST Register ($90) 40
5.1.2.15 16 BIT SUBAUDIO TEST READ DATA Register ($91) 41
5.1.2.16 TONE SIGNALING CONTROL Register ($93) 41
5.1.2.17 SUBAUDIO STATUS Register ($94) 42
5.1.2.18 8 BIT SUBAUDIO TASK DATA Register ($95) 42
5.1.2.19 SUBAUDIO ANALOG CONTROL Register ($97) 43

6 Application Notes 45

6.1 Overview 45
6.2 Basic FRS Radio Architecture 46
6.3 CMX838 Architectural Overview 47
6.4 Detailed CMX838 Architecture 47
6.4.1 Audio Processing 48
6.4.2 Tone Signaling Processor 50
6.4.3 Level Control 52
6.4.4 Synthesizer and Charge Pump 54
6.4.5 Clock Generation 54
6.4.6 Powersave Functions 55
6.5 Control Registers Illustrated 55
6.6 Application Examples 58
6.6.1 CMX838 Initialization 58
6.6.1.1 Register Descriptions: 58
6.6.2 TX, subaudio encoding, single point modulation 58
6.6.2.1 Register Descriptions: 59
6.6.3 RX, subaudio decode CTCSS tone or tones 60
6.6.3.1 Register Descriptions: 60
6.6.4 RX, multiple subaudio tone detect - Tone Cloning™ 62
6.6.4.1 Register Descriptions: 62

7 Performance Specification 64

7.1 Electrical Performance 64
7.1.1 Absolute Maximum Ratings 64
7.1.2 Operating Limits 64
7.1.3 Operating Characteristics 65
7.1.4 Timing 68
7.2 Packaging 70

FIGURES

Figure **Page**

Figure 1: Block Diagram ... 6
Figure 2: Recommended External Components ... 9
Figure 3: Audio Processing Block Diagram ... 10
Figure 4: Digitally controlled amplifiers and switch matrix for adjusting and switching transmit audio and subaudio signals. ... 11
Figure 5: TX Input Amplifier ... 11
Figure 6: Magnitude response for input low-pass filter. ... 12
Figure 7: Magnitude response for pre-emphasis filter. ... 12
Figure 8: Magnitude response of high-pass filter. ... 13
Figure 9: Magnitude response of post-deviation limiter low-pass filter. ... 13
Figure 10: Magnitude response of de-emphasis filter. ... 14
Figure 11: Transmit audio path frequency response with pre-emphasis. ... 14
Figure 12: Receive audio path frequency response with de-emphasis. ... 15
Figure 13: Audio path frequency response without pre-emphasis or de-emphasis. ... 15
Figure 14: Deviation limiter block diagram. ... 16
Figure 15: Subaudio Block Diagram ... 17
Figure 16: Subaudio RX filter gain for normal CTCSS operation. ... 18
Figure 17: Subaudio RX filter delay for normal CTCSS operation. ... 18
Figure 18: Subaudio TX level for normal CTCSS operation (Magnitude scale with respect to 0dBV) ... 19
Figure 19: Subaudio TX filter delay for normal CTCSS operation. ... 19
Figure 20: RF Synthesizer block diagram. ... 26
Figure 21: Block diagram of main programmable divider. ... 26
Figure 22: C-BUS transaction timing diagram. ... 28
Figure 23: Basic FRS Radio Tx Architecture ... 46
Figure 24: Basic FRS Radio Rx Architecture ... 46
Figure 25: CMX838 Main Function Blocks ... 47
Figure 26: CMX838 Main Sections ... 47
Figure 27: Audio Processing ... 48
Figure 28: Example Audio RX Path ... 49
Figure 29: Example Audio TX Voice Path ... 49
Figure 30: Example Audio TX Internally Generated Tone with Loudspeaker Enabled Path ... 49
Figure 31: Tone Signaling Processor ... 50
Figure 32: Example CTCSS Tone Decoder Path ... 51
Figure 33: Example CTCSS Tone Encoder Path ... 51
Figure 34: Example Internal Audio Tone Encoder Path ... 52
Figure 35: Level Control ... 52
Figure 36: Example Single Point Modulation Level Path ... 53
Figure 37: Example Two-Point Modulation Level Paths ... 53
Figure 38: Example Single Point Modulation with Varied Subaudio Level Paths ... 53
Figure 39: Synthesizer and Charge Pump ... 54
Figure 40: Clock Generation ... 54
Figure 41: Powersave Scope and Related Control Registers ... 55
Figure 42: Synthesizer to Baseband Clock Control, $89 ... 55

Figure 43: Setup, $80 56
Figure 44: Audio ($81), RX Audio Level ($82) and Subaudio Analog ($97) Control 56
Figure 45: Audio Power and Bandwidth Control, $83 57
Figure 46: TXMOD1 & TXMOD2 Control, $88 57
Figure 47: Application Example TX, Subaudio Encoding, Single Point Modulation 60
Figure 48: C-BUS Timing 69
Figure 49: 28-pin TSSOP (E1) Mechanical Outline: *Order as part no. CMX838E1* 70
Figure 50: 28-pin SOIC (D1) Mechanical Outline: *Order as part no. CMX838D1* 70

1 Block Diagram

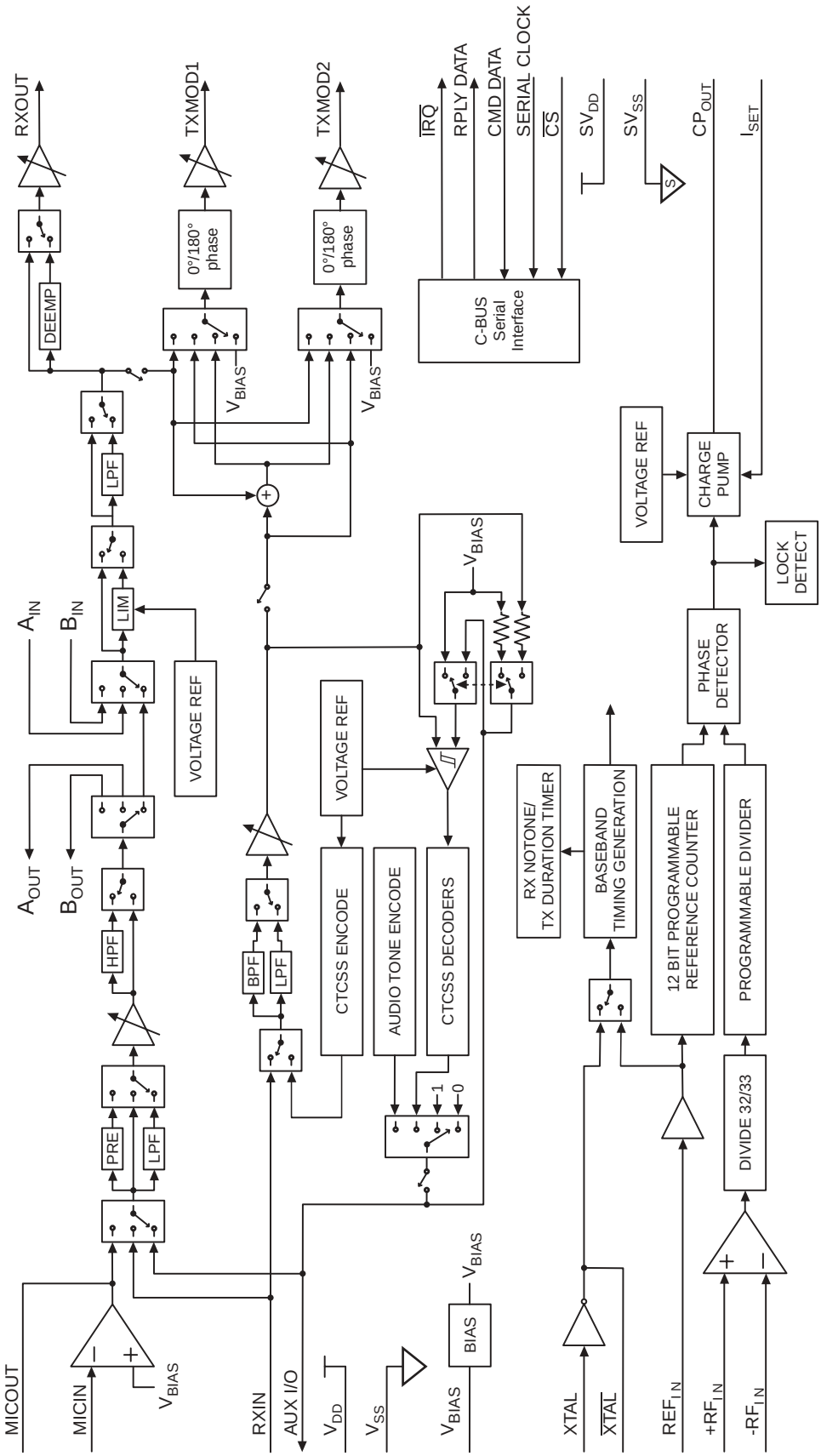

Figure 1: Block Diagram

2 Signal List

Package	Signal		Description
Pin No. E1/D1	Name	Type	
1	RXIN	input	Receive input for both audio and subaudio signals.
2	AUX I/O	input/output	When configured as an input this pin can be used to route externally generated ringing or alert signals to the Rx and Tx audio paths. When configured as an output this pin allows for monitoring internally generated ringing or alert signals. See Section 4.2.4.5.3
3	MICOUT	output	Microphone amplifier feedback output.
4	MICIN	input	Microphone amplifier input. This is the inverting input to a high gain opamp, suitable for use with common microphones.
5	CP_{OUT}	output	Synthesizer charge pump output. Apply to external loop filter that drives the control input of an external VCO
6	I_{SET}	input	Synthesizer charge pump current control. Connect via external resistor to SV_{SS} to set charge pump current.
7	SV_{DD}	power	Synthesizer positive supply. This signal must be decoupled to SV_{SS} by a capacitor mounted close to the device pins.
8	$-RF_{IN}$	input	Synthesizer RF negative input. Connect this pin to SV_{SS} (synthesizer common) when a non-differential input signal is applied to $+RF_{IN}$.
9	$+RF_{IN}$	input	Synthesizer RF positive input.
10	SV_{SS}	power	Synthesizer negative supply.
11	REF_{IN}	input	Synthesizer reference oscillator input.
12	XTAL	input	The input to the on-chip oscillator, for external Xtal circuit or clock. This input should be connected to V_{SS}, Circuit Common, when the device is configured to generate the XTAL clock internally from the REF_{IN} clock.
13	$\overline{XTAL}$	output	Inverted output of the on-chip crystal oscillator. This pin should not be connected (left open) when the device is configured to generate the XTAL clock internally from the REF_{IN} clock.
14	$\overline{CS}$	input	C-BUS select data loading control function input. This input controls C-BUS transfer initiation, completion and cancellation.
15	$\overline{IRQ}$	output	Interrupt output, logic '0' active level. This is a 'wire-Orable' output, enabling the connection of multiple peripherals to 1 interrupt port on an external µController. This pin has a low impedance pull-down to logic "0" when active and a high-impedance when inactive. An external pull-up resistor is required. Interrupt outputs may be configured via mask bits via C-BUS commands.
16	RPLY DATA	output	Reply data output to C-BUS serial control port. Output reply data bytes are synchronized to the CLK clock input under the control of the $\overline{CS}$ input. This 3-state output is held at high impedance when not driving output data.
17	CMD DATA	input	Command data input to C-BUS serial control port. Data is loaded into this device in 8-bit bytes, MSB (D7) first, and LSB (D0) last, synchronized to the CLK clock input.

Package	Signal		Description
18	SERIAL CLOCK	input	Serial clock input to C-BUS serial control port. This clock input controls transfer timing of commands and data to and from the device.
19	V_{SS}	power	Negative supply (Circuit Common)
20	TXMOD2	output	Transmit Output 2 internally switch selected to be at any of (1) V_{BIAS}, (2) transmit subaudio or (3) transmit audio summed with subaudio.
21	TXMOD1	output	Transmit Output 1 internally switch selected to be at any of (1) V_{BIAS}, (2) transmit audio or (3) transmit audio summed with subaudio.
22	V_{DD}	power	Positive supply. Levels and voltages are dependent upon this supply. This signal must be decoupled to V_{SS} by a capacitor mounted close to the device pins.
23	RXOUT	output	Processed receive audio output.
24	B_{IN}	input	External processing Path B input.
25	A_{IN}	input	External processing Path A input.
26	V_{BIAS}	bi-directional	A bias line for the internal circuitry, driven to $V_{DD}/2$ by a high impedance source. This signal must be decoupled by a capacitor mounted close to the device pins.
27	B_{OUT}	output	External processing Path B output. This provides internal switch controlled access to either Rx or Tx audio signals for external processing such as expanding and unscrambling.
28	A_{OUT}	output	External processing Path A output. This provides internal switch controlled access to either Rx or Tx audio signals for external processing such as compressing and scrambling.

Table 1: Signal List

3 External Components

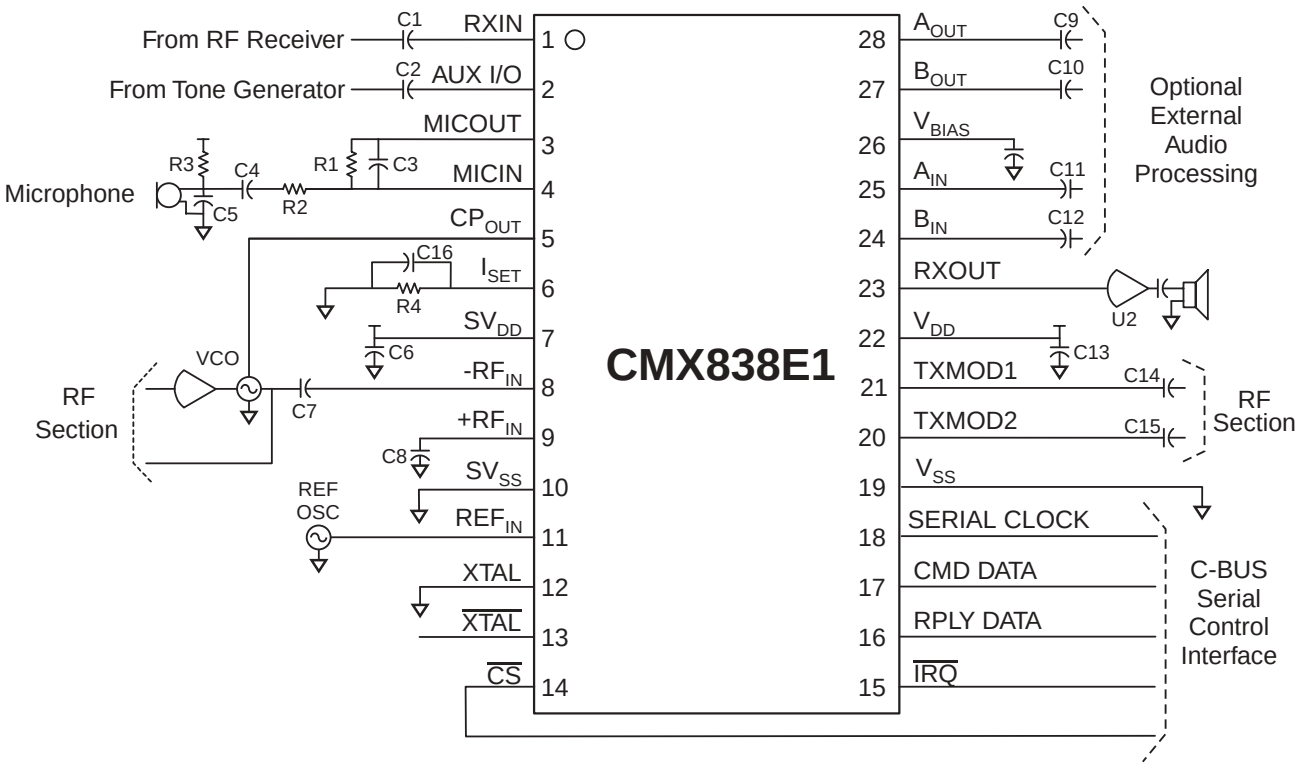

Figure 2: Recommended External Components

R1	Note 1	470kΩ	±5%
R2	Note 1	10kΩ	±5%
R3	Note 2	100kΩ	±10%
R4	Note 3		±10%
C1		0.1µF	±20%
C2		0.1µF	±20%
C3	Note 1	33pF	±20%
C4	Note 1	0.1µF	±20%
C5	Note 2	0.1µF	±20%
C6		0.1µF	±20%
C7		0.1µF	±20%
C8		0.1µF	±20%

C9		0.1µF	±20%
C10		0.1µF	±20%
C11		0.1µF	±20%
C12		0.1µF	±20%
C13		0.1µF	±20%
C14		0.1µF	±20%
C15		0.1µF	±20%
C16		47.0pF	±20%
U2		Speaker driver e.g. LM386	

External Components Notes:

1. R1, R2, C3 and C4 form the gain components for the Tx Input Amplifier (microphone amplifier). R1 should be chosen as required by the signal level, using the following formula:

   Gain = -R1/R2

   C3 x R1 should be chosen so as not to compromise the high frequency performance and C4 x R2 should be chosen so as not to compromise the low frequency performance. Minimum suggested resistor value for R1 and R2 is 10kΩ.
2. R3 and C5 values are dependent on microphone specifications.
3. R4 Sets charge pump source current. See Section 4.3.3.

4 General Description

4.1 Audio

The audio signal processing is designed to meet or exceed the requirements for basic audio filtering, gain control and deviation limiting in a FRS radio. Figure 3 is a block diagram of the audio circuitry.

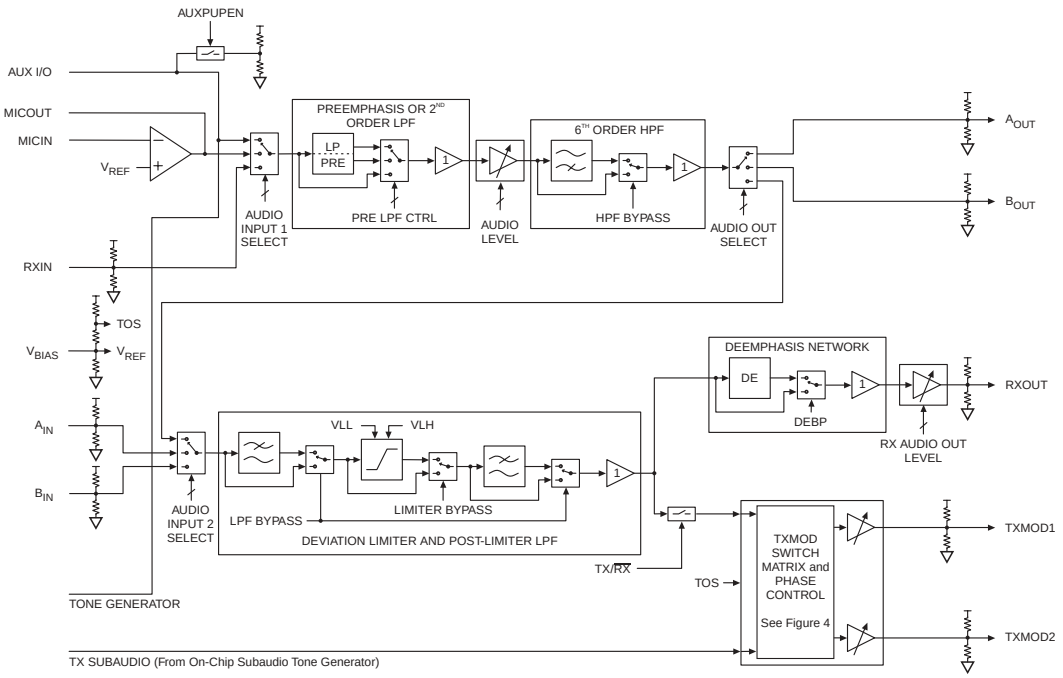

Figure 3: Audio Processing Block Diagram

4.1.1 Digitally Controlled Amplifiers (DCA)

There are five DCAs on-chip. They are used to set signal levels for audio in/out, subaudio in/out, receive audio out (volume control), modulation out1, and modulation out2. The audio in/out DCA is adjustable in 0.5dB steps over a +7.5dB to –7.5dB range, see Section 5.1.2.3. The volume control level DCA is adjustable in 1.5dB steps over a +12dB to –33dB range, see Section 5.1.2.4. The subaudio signal level in/out DCA is adjustable in 0.5dB steps over a +7.5dB to –7.5dB range, see Section 5.1.2.19

The modulation level controls are composed of two DCAs, and a switch matrix, see Figure 4. Each modulation level DCA, modulation out1 and modulation out2, can be switched to select either the output of the audio processor, or the output of the tone generator, or the addition of the audio and tone. In addition, there is an internally generated DC volume (labeled 'TOS' in Figure 4), which can be sent to the MOD1 and MOD2 DCA's. This signal is not generally applicable to FRS radios. However, in some cases it may be desirable for testing or signal generation. The modulation out1 DCA is adjustable in 0.5dB steps over a +7.5dB to –7.5dB range and the Modulation Out2 DCA is adjustable in 0.25dB steps over a +3.75dB to -3.75dB range, see Section 5.1.2.6. To obtain inverse signals of mod 1and mod 2, the MSB from the first byte (bit 7) and the MSB from second byte (bit 15) have to set to logic 1, see Section 5.1.2.6.

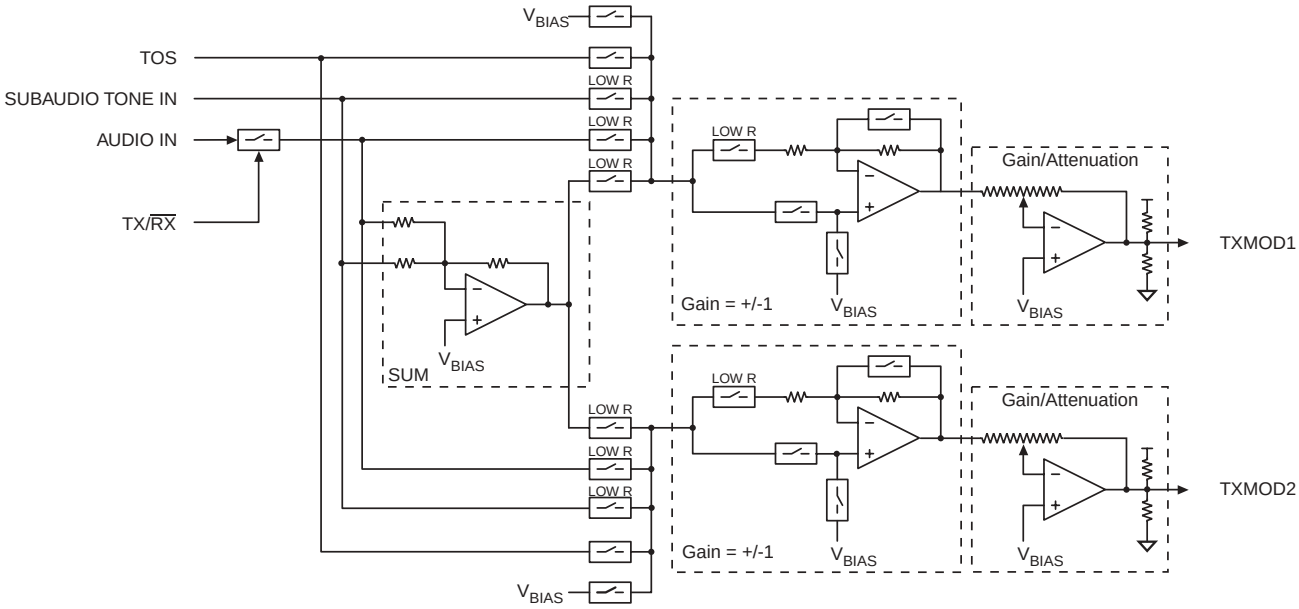

Figure 4: Digitally controlled amplifiers and switch matrix for adjusting and switching transmit audio and subaudio signals.

4.1.2 Transmit Input Amplifier

The transmit input amplifier is a high gain low-noise operational amplifier. Figure 5 is a simplified schematic showing the external components required for typical application with an electret condenser microphone. The external component values should be selected such that the feedback resistor will be greater than 10kΩ and the minimum gain should be greater than 6dB.

In some cases, it may be desirable to implement a pre-emphasis characteristic of appropriately configuring the external component values around the TX input amplifier. In this case, the internal pre-emphasis should be bypassed (via C-BUS).

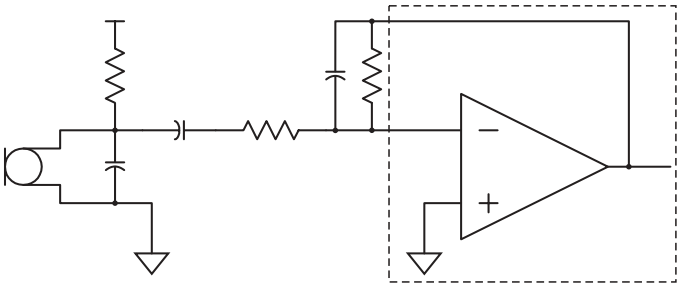

Figure 5: TX Input Amplifier

4.1.3 Audio Switched Capacitor Filters

Four standard (composed of biquadratic sections) switched capacitor filters are used in the audio section. A pre-emphasis filter (+6dB per octave from 300 to 3000 Hz intended for transmit only) is implemented using 2nd order switched capacitor network, which can be configured (via C-BUS) to be a 2nd order low-pass. A 6th order high-pass filter is used to remove subaudible tones and bandwidth limit the incoming receive or transmit audio signal prior to being input to the limiter. A 4th order low-pass filter follows the deviation limiter. This filter smoothes the transients generated by the deviation limiter. Finally, a de-emphasis filter (-6dB per octave from 300 to 3000 Hz intended for receive only) is implemented using a 2nd order switched capacitor network. See Section 5.1.2 for details on configuring audio filters.

4.1.3.1 Pre-emphasis/Low-pass Filter

Figure 6 shows magnitude response for the Input Pre-emphasis/Low-pass Filter when programmed for low-pass mode. This mode would typically be selected when processing Rx audio.

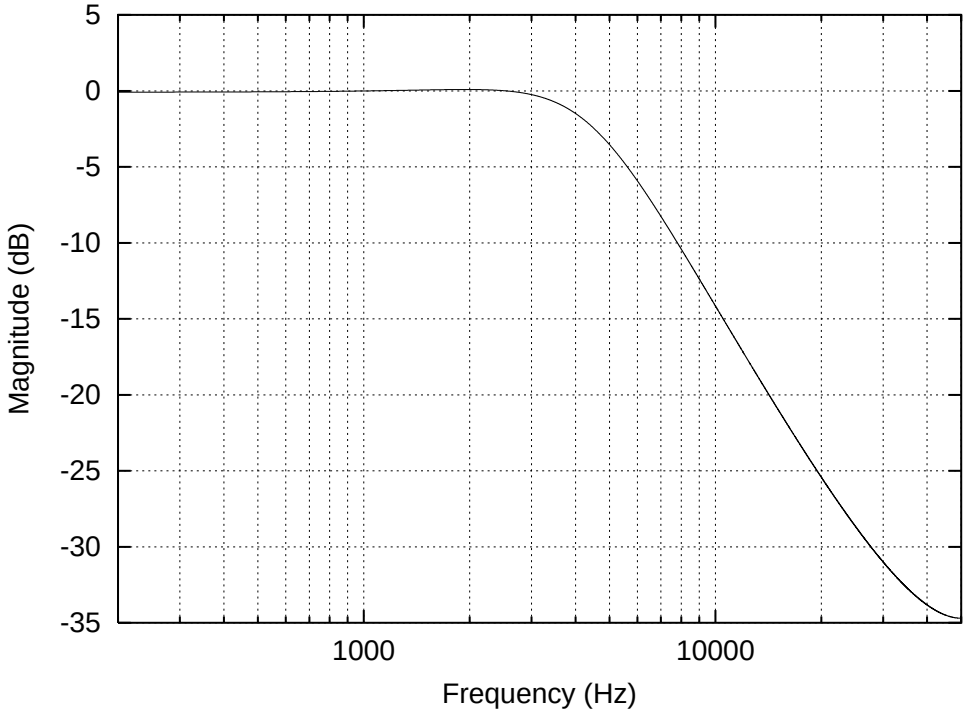

Figure 6: Magnitude response for input low-pass filter.

Figure 7 shows magnitude response for the Input Pre-emphasis/Low-pass Filter when programmed for Pre-emphasis mode. This mode would typically be selected when processing Tx audio.

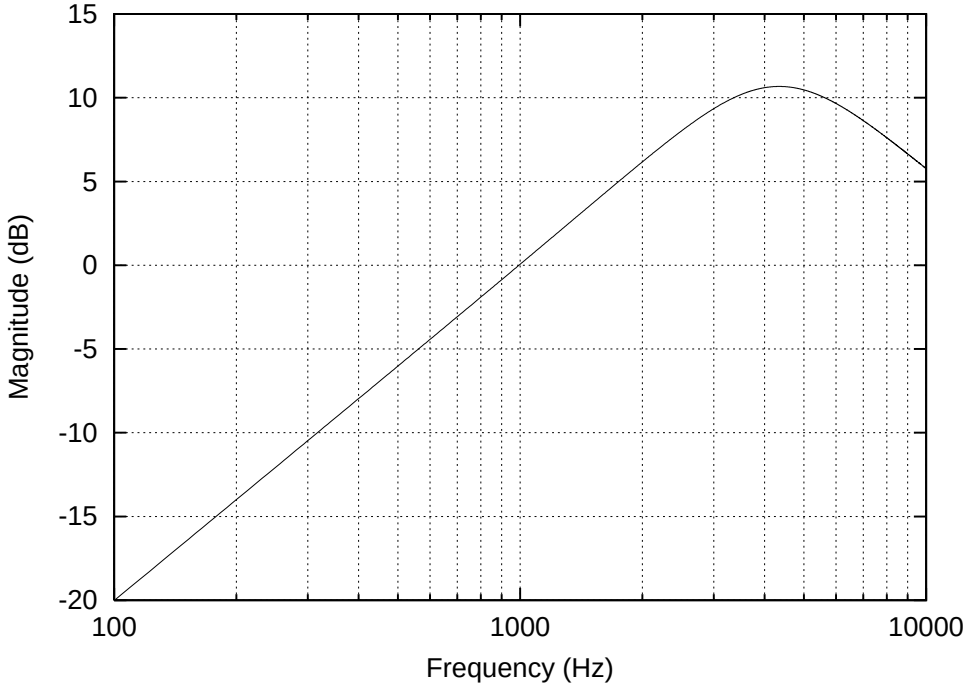

Figure 7: Magnitude response for pre-emphasis filter.

4.1.3.2 High-pass Filter

Figure 8 shows the magnitude response for the Audio High Pass Filter. This filter's purpose is to suppress subaudio tones when processing both Rx and Tx audio.

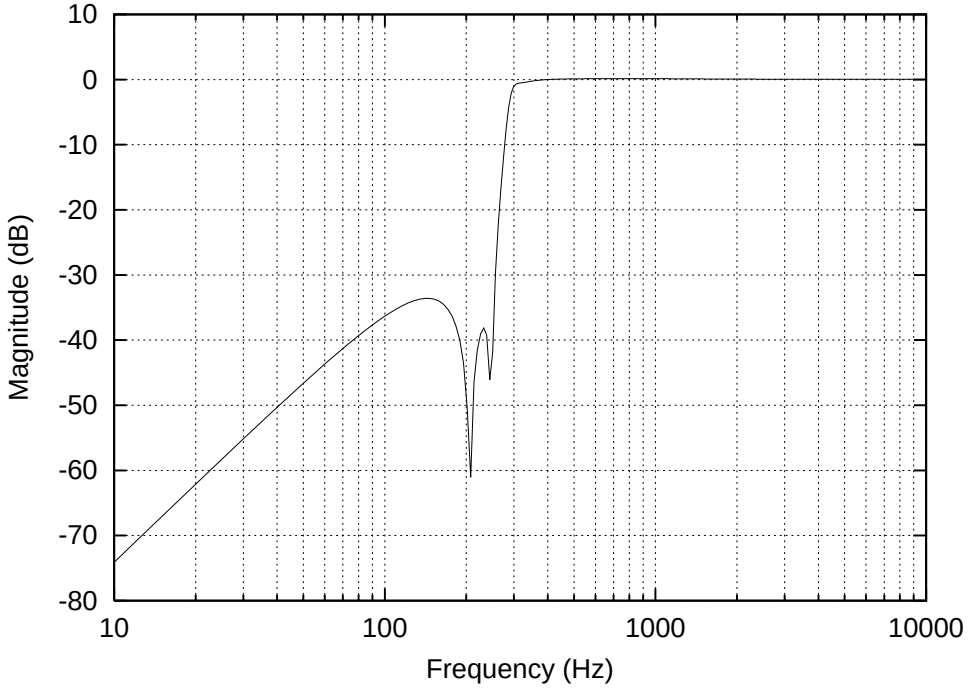

Figure 8: Magnitude response of high-pass filter.

4.1.3.3 Deviation Limiter Low-pass Filter

The magnitude response for narrowband and wideband modes is shown in Figure 9. Narrow-band mode is generally required for transmitting in systems having RF Channel BW ≤12.5kHz (e.g. FRS).

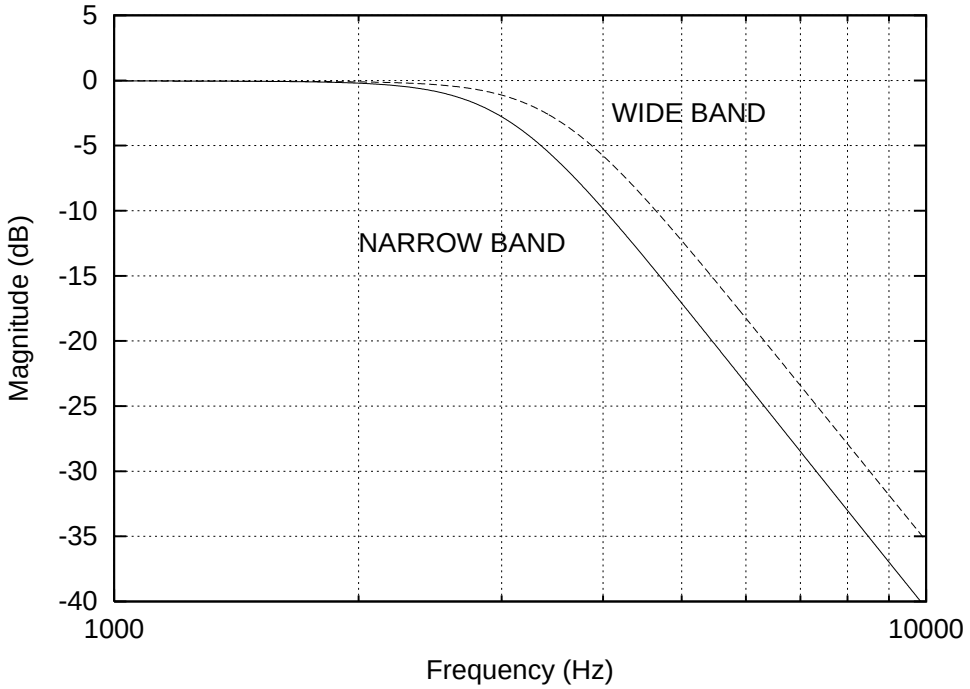

Figure 9: Magnitude response of post-deviation limiter low-pass filter.

4.1.4 De-emphasis

Figure 10 shows magnitude response for the De-emphasis Filter. This filter precedes the Rx Audio Level Control and is generally required to process Rx audio.

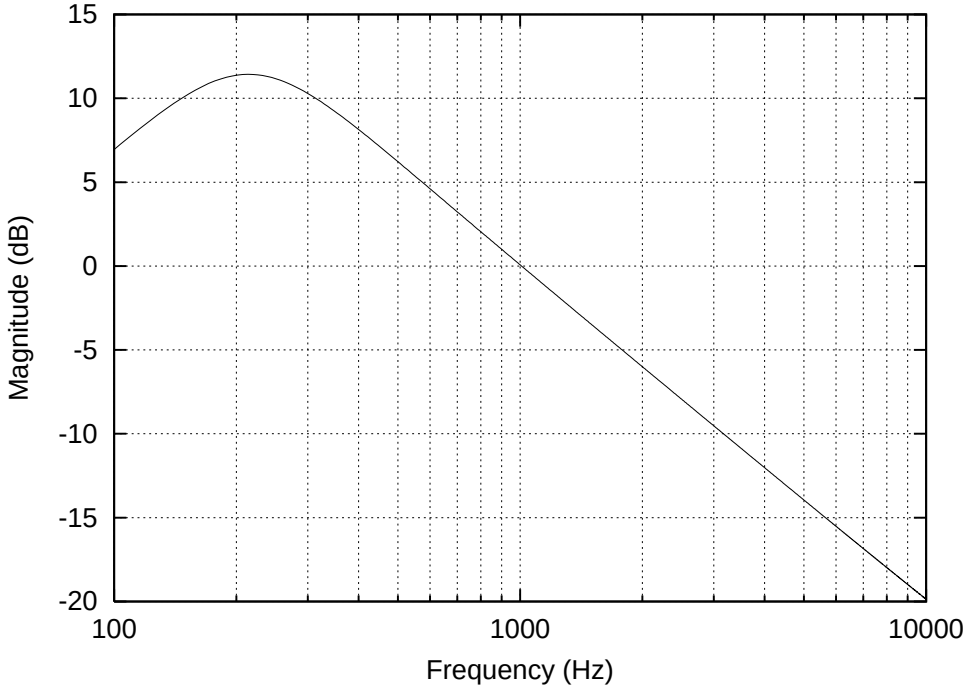

Figure 10: Magnitude response of de-emphasis filter.

4.1.5 Transmit Audio Path

Overall magnitude response for the transmit audio path for wideband and narrowband with pre-emphasis is shown in Figure 11.

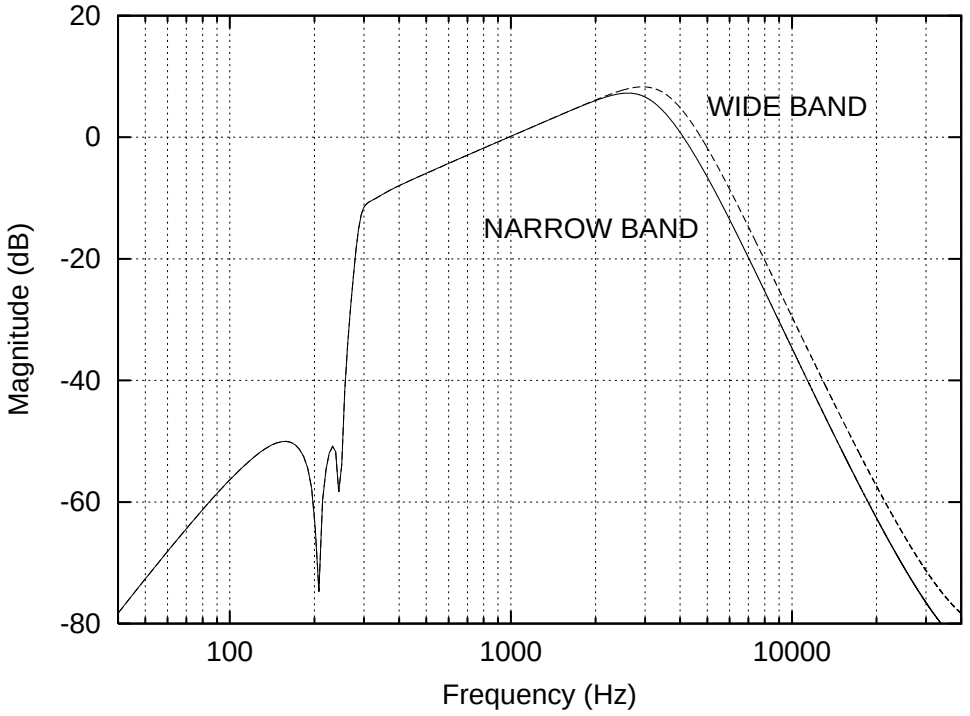

Figure 11: Transmit audio path frequency response with pre-emphasis.

4.1.6 Receive Audio Path

Overall magnitude response for the receive audio path for wideband and narrowband with de-emphasis is shown in Figure 12.

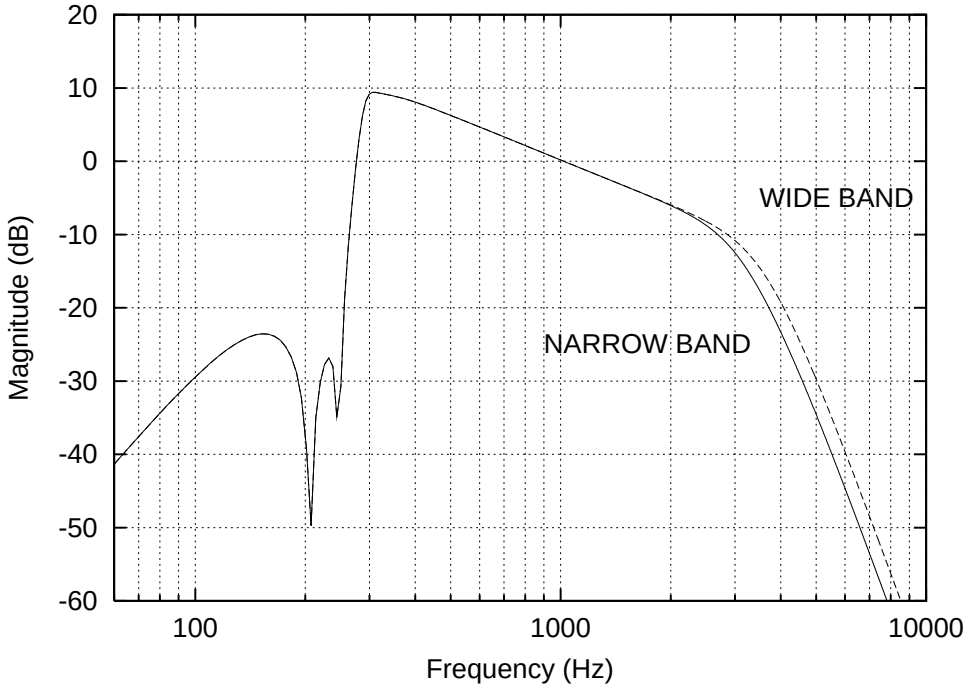

Figure 12: Receive audio path frequency response with de-emphasis.

4.1.7 Audio Path without De-emphasis or Pre-emphasis

The magnitude response for the audio path (could apply to transmit or receive) without the pre-emphasis or de-emphasis is shown in Figure 13.

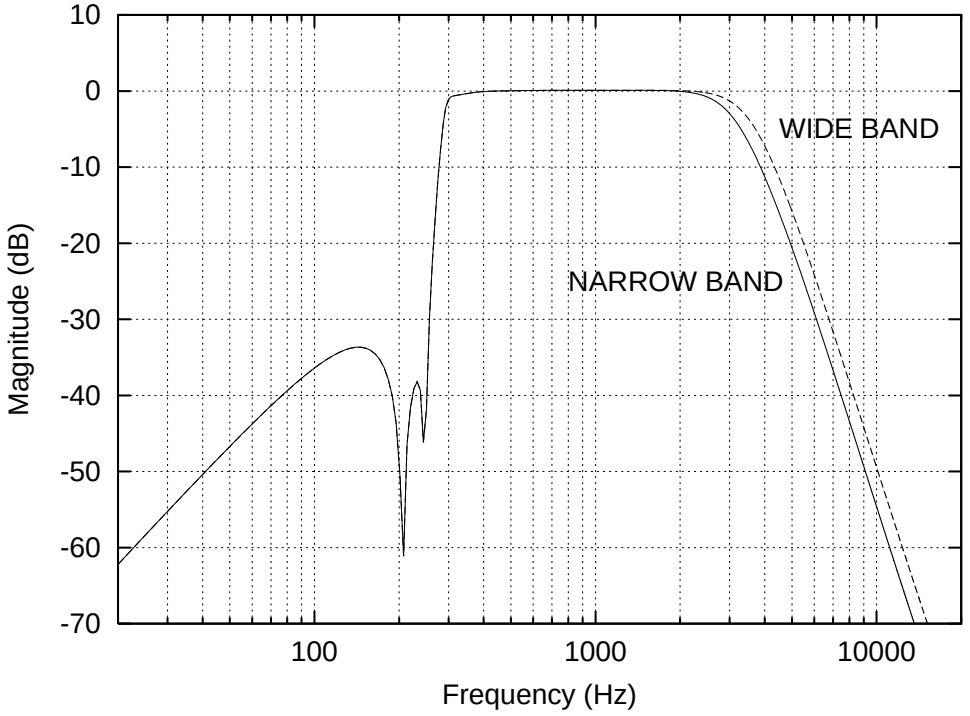

Figure 13: Audio path frequency response without pre-emphasis or de-emphasis.

4.1.8 Deviation Limiter

The purpose of the deviation limiter is to limit the signal level at baseband prior to reaching the RF modulator. This is necessary to avoid co-channel interference as well as conform to the spectral constraints stipulated by regulatory agencies (e.g. FCC). Figure 14 is a block diagram of the limiter circuitry. Applying a DC voltage between V_{DD} and $V_{DD}/2$ to the reference input sets the maximum peak-to-peak signal level. This reference is internally set so the maximum signal level is $2.196V_{P-P}$ and is constant over supply voltage.

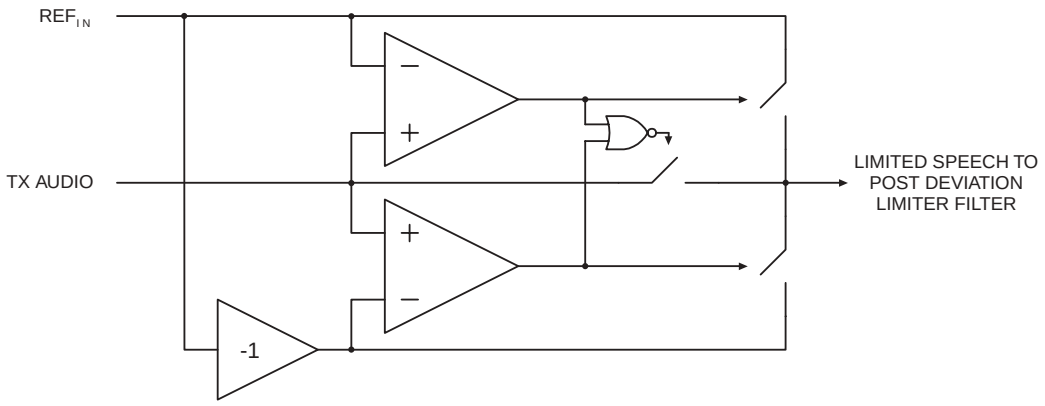

Figure 14: Deviation limiter block diagram.

4.2 Tone Signaling Processor

4.2.1 Tone encoding/decoding

The tone signaling processor includes CTCSS encode and decode functions as well as an audio frequency ringing/alert tone generator. The signaling processor is comprised of a configurable analog filter controlled by the SUBAUDIO ANALOG CONTROL Register ($97) and a digital processor controlled by configuration tasks. All device configuration data is passed over the device's C-BUS serial interface. The configuration tasks to setup the digital processor are simply C-BUS transaction sequences, which download task argument data followed by a task request command. In typical applications, once the tone signaling processor is initialized, its primary behavior (CTCSS encode and decode) is steered by the $TX/\overline{RX}$ bit of the SETUP Register ($80).

The subaudio filter is shared between transmit and receive. It is used to remove the speech signal from the receive subaudio signal, leaving only the subaudible squelch signal as input to the digital processor. This filter is also used to smooth the digitally generated subaudible signals in the transmit mode. Following the filter is a gain trimmer stage that can adjust the signal level ±7.5dB in 0.5dB steps into the decoding section or out to the modulation section. Approximately 20dB of gain is provided in the receive path and 20dB of attenuation in the transmit path.

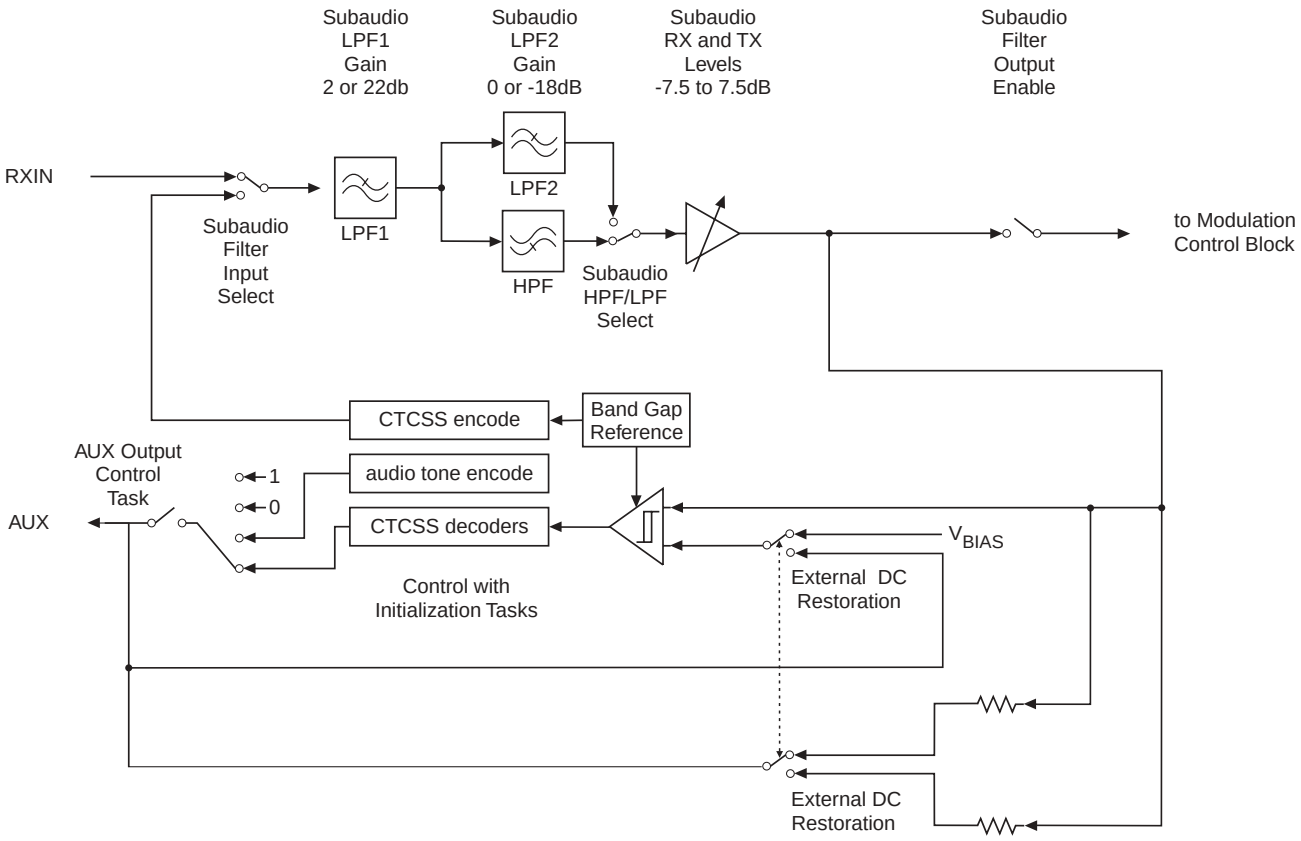

Figure 15: Subaudio Block Diagram

4.2.2 Subaudio RX and TX Filter Characteristics

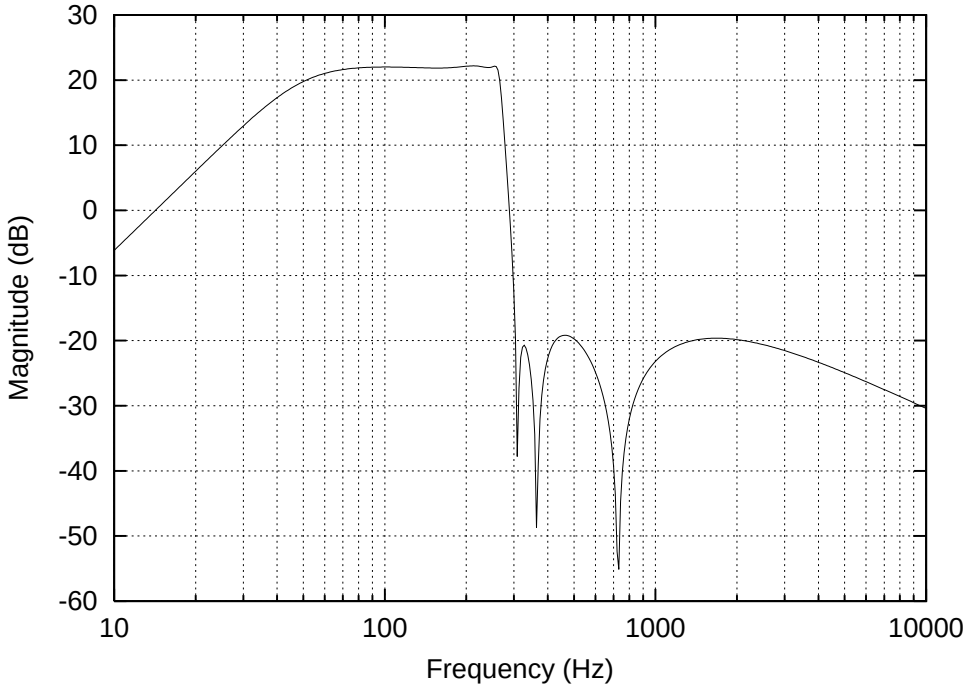

Figure 16: Subaudio RX filter gain for normal CTCSS operation.

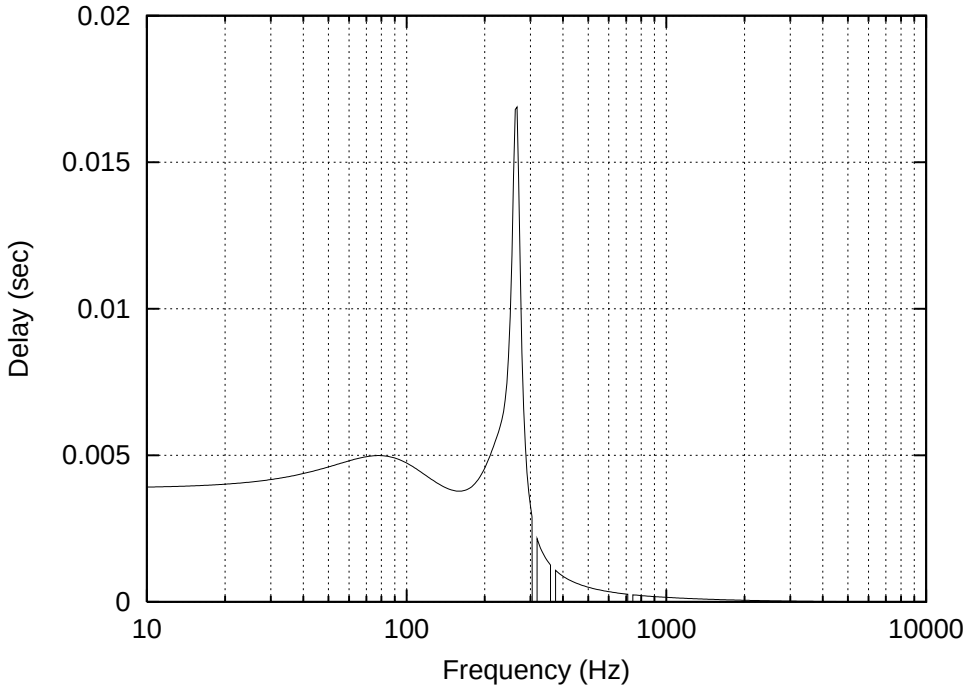

Figure 17: Subaudio RX filter delay for normal CTCSS operation.

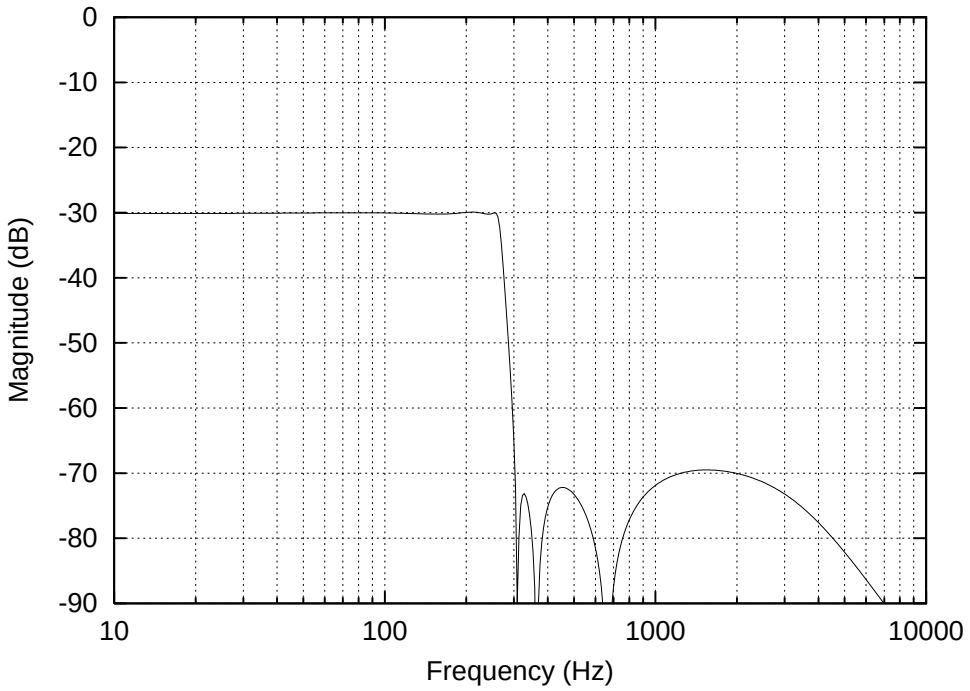

Figure 18: Subaudio TX level for normal CTCSS operation (Magnitude scale with respect to 0dBV)

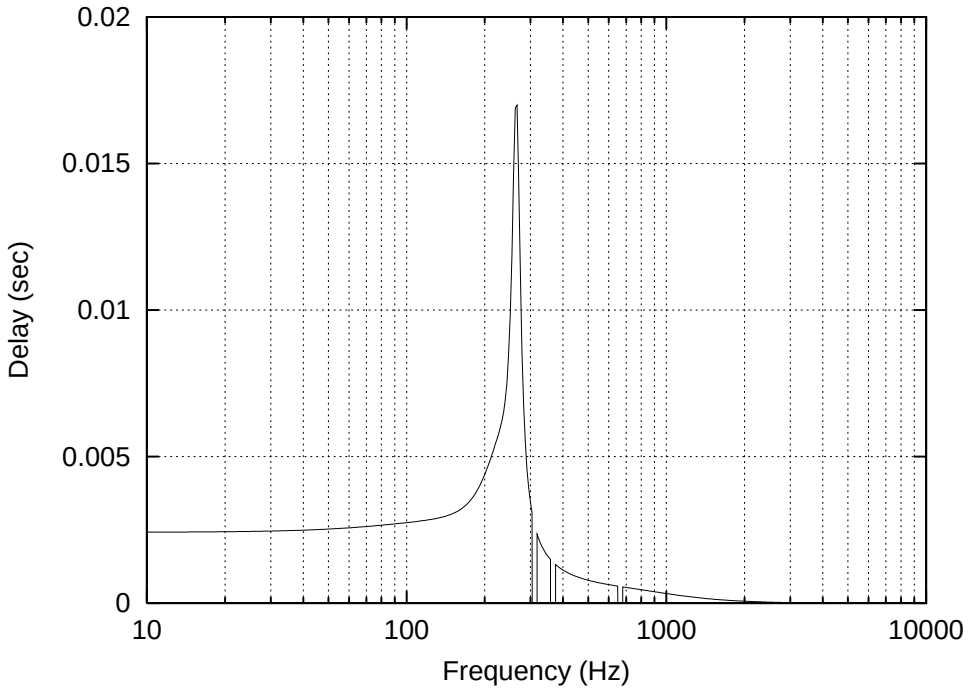

Figure 19: Subaudio TX filter delay for normal CTCSS operation.

4.2.3 CTCSS Subaudio Decoder and Encoder Tone Set

The CMX838 supports all popular subaudio tones with a unique, full performance, 'one-of-any' rapid detect capability that adds support for end product group calling and Tone Cloning™ features. The digital processor essentially contains 51 decoders to analyze the receive signal. Each decoder can independently be enabled or disabled via configuration tasks.

The result of the subaudio signal analysis is available in the subaudio status register ($94). Both a decode status bit, and a decoder index number are reported in the status register. The decode status bit is a logic one when an enabled decoder senses that the input signal matches its center frequency – the index number will be that of the matching decoder.

If the input signal does not contain a subaudio signal that matches an enabled decoder's center frequency then the status bit is a logic zero – in this case the decoder index number is reported as:

A. 62 if there is a significant subaudio frequency present.
B. 63 if the no tone timer has expired indicating there is no significant subaudio frequency present now.
C. 0 if no subaudio signal has been seen since the subaudio processor was enabled or most recently placed in RX mode.
D. Any enabled index, if the last frequency measurement indicates that enabled tone may be present but has not yet been fully qualified.

In TX mode the subaudio status is normally 0 and becomes 127 to indicate that the TX timer timed out.

No.	Frequency (Hz)
1.	67.0
2.	69.3
3.	71.9
4.	74.4
5.	77.0
6.	79.7
7.	82.5
8.	85.4
9.	88.5
10.	91.5
11.	94.8
12.	97.4
13.	100.0
14.	103.5
15.	107.2
16.	110.9
17.	114.8
18.	118.8
19.	123.0
20.	127.3
21.	131.8
22.	136.5
23.	141.3
24.	146.2
25.	151.4
26.	156.7

No.	Frequency (Hz)
27.	159.8*
28.	162.2
29.	165.5*
30.	167.9
31.	171.3*
32.	173.8
33.	177.3*
34.	179.9
35.	183.5*
36.	186.2
37.	189.9*
38.	192.8
39.	196.6*
40.	199.5*
41.	203.5
42.	206.5*
43.	210.7
44.	218.1
45.	225.7
46.	229.1*
47.	233.6
48.	241.8
49.	250.3
50.	254.1*
51.	User Programmable

* Subaudible Tones not included in TIA-603 standard

Table 2: CTCSS Subaudio Tone Frequencies with their Corresponding Index Number

4.2.4 Tone Signaling Processor Configuration Task Descriptions

	Task ID	Task Description	Argument Data In
Normal Run Mode	0	Normal Operation	N/A
Reserved For Test	1, 2, 3	Special Test Functions	N/A
RX Configure	4	Enable/Disable Tone Detector	$95
	5	Program User Defined Subaudio Tone	$8E
	6	Adjust Detector Band Width	$8E
	7	Adjust No Tone Timer Duration	$8E
TX Configure	8	Select Sub-Audio Tone From Preprogrammed List	$95
	9	Program User Defined Subaudio Tone	$8E
	10	Program Audio Frequency Ringing Tone	$8E
	11	Program TX Timer	$8E
Initialize and Configure	12	Enter Fast Initialization Mode	N/A
	13	Quickly Enable/Disable Multiple Detectors	$95
	14	Configure Aux Pin as Output	$95
	15	Soft Reset	N/A

Table 3: Tone Signaling Processor Initialization and Configuration Tasks

Tone signaling configuration tasks initialize the tone signaling processor. While the processor is running, either generating or detecting tones (controlled by the $TX/\overline{RX}$ bit of register $80), configuration tasks can be issued at a rate up to one per 250µs. The required argument register(s) should not be modified for at least this time after issuing a task. Before issuing tasks that require argument data, first load the argument data in the argument data register. Then load the desired task in the task field of the sub-audio general control register. The Power control (i.e. enabled) and IRQ control (set however you want) should be logically OR'ed with the desired task field to define the data to load in register $93. All C-BUS writes to the tone signaling control register ($93), that enable (or keep enabled) the tone signaling processor, constitute issuing a task. Before tasks are issued, the base band clocks must be setup.

4.2.4.1 Normal Run Mode (Task 0)

To place the device in Normal Run mode issue Task 0. In this mode, the tone signaling processor will either encode or decode depending on the $TX/\overline{RX}$ bit of register ($80).

4.2.4.2 Reserved For Test (Task 1-3)

Do not issue tasks 1, 2 or 3 as these are reserved for test.

4.2.4.3 RX Configuration

The following four tasks are used to control the decode behavior.

4.2.4.3.1 Enable or Disable Tone Detector (Task 4)

This task can be used to enable or disable tone detectors 1 to 51. Tone Detectors 1 to 50 have preset detection center frequencies while tone detector 51 has a user programmable center frequency. This task may be issued multiple times to configure a tone watch list. It is recommended not to include non TIA-603 tones with their adjacent TIA tones in a watch list.

Load argument in register $95, then issue task 4. Repeat as needed to configure tone watch list.

The argument data has the following format in the 8 bit task data register ($95).

Bit 7	Bit 6	Bits 5-0
1=enable 0=disable	Don't care	Tone detector index number (1-51) Additionally using index 63 can enable or disable all detectors while issuing just one task. Enabling index 62 enables detection of all TIA-603 Tones. There is no single command to disable just the TIA-603 Tone Detectors – instead use index 63 to disable all detectors.

For example to enable the 67Hz Tone Detector:

```
$95    0x81      // data to enable tone index 1 (67Hz)
$93    0x64      // task command to actually enable tone detector (and IRQ's)
```

4.2.4.3.2 Program User Defined RX Sub-Audio Tone (Task 5)

This task is used to program the center frequency of user programmable detector 51. Load the Argument value in register $8E, then issue task 5.

The argument can be calculated according to the following equations.

$$N = INT\left(\frac{96 \cdot 511 \cdot f}{100000}\right)$$

$$R = INT\left(0.5 + 511 - \frac{100000 \cdot N}{96 \cdot f}\right)$$

$$Argument = N \cdot 64 + R$$

The argument data for 65 Hz would be 31*64+14 = 0x07CE

The programmed center frequency can be back calculated by:

$$f = \frac{100000 \cdot N}{96(511 - R)}$$

In the example above the actual center frequency would be 64.97 Hz.

A C-BUS sequence to setup tone detector 51 for 65Hz and enable just it would be:

```
$8E    0x07CE    // Argument data for user defined 65Hz RX Tone.
$93    0x45      // Task 5 command (No IRQ's enabled)

wait 250µs

$95    0x3F      // Task 4 argument data to disable all decoders
$93    0x44      // Task 4 command (No IRQ's enabled)

wait 250µs

$95    0xB3      // Task 4 argument data to enable decoder 51 (The user definable one)
$93    0x64      // Task 4 command (with IRQ's enabled)

wait 250µs

$93    0x60      // Task 0 command (to place device normal run mode with IRQ's enabled)
                 // last command is not required if the device was already in normal run mode
```

4.2.4.3.3 Adjust Detector Band Width (Task 6)

The default bandwidth can be increased or decreased in increments of approximately 0.2% by loading a small positive or negative (2's complement) value in register $8E and then issuing task 6. For the standard TIA tone set the default BW setting is recommended – so there is no need to adjust it. By default, the detector has a small BW hysteresis to minimize chatter in marginal conditions.

4.2.4.3.4 Adjust No Tone Timer Duration (Task 7)

The default no tone timer duration can be increased or decreased in increments of 60μs by loading a positive or negative (2's complement) value in register $8E and then issuing task 7.

$$Argument = INT(0.5 + 16.667 \cdot TimerDelta)$$

Where TimerDelta is the amount by which you want to increase or decrease the Default No Tone Timer in milliseconds.

For example, to increase the default no tone timer by 10ms, load 167 (0xA7) into register $8E before issuing task 7.

```
$8E     0x00A7
$93     0x67            // Task 7 command to adjust no tone timer with IRQ's enabled
```

4.2.4.4 TX Configuration

4.2.4.4.1 Select Sub-Audio Tone From Preprogrammed List (Task 8)

To select a preprogrammed sub-audio tone, load the index argument (1 to 50) in register $95 then issue task 8.

For example to set up TX tone to 114.8 Hz, the required C-BUS sequence would be

```
$95     0x11
$93     0x48
```

4.2.4.4.2 Program User Defined TX Sub-Audio Tone (Task 9)

To program a user defined sub-audio tone, load the argument in register $8E then issue task 9. Where the argument is defined by,

$$Argument = INT\left(0.5 + \frac{36 \cdot 65536 \cdot f}{100000}\right)$$

For example to set up TX tone to 65 Hz, the required C-BUS sequence would be

```
$8E     0x05FE
$93     0x49
```

4.2.4.4.3 Program Audio Frequency Ringing Tone (Task 10)

To program a user-defined audio ringing tone, load the argument in register $8E then issue task 10. Where the argument is defined by,

$$Argument = INT\left(0.5 + \frac{6 \cdot 65536 \cdot f}{100000}\right)$$

For example to set up the ringing tone frequency to 620 Hz, the required C-BUS sequence would be

```
$8E     0x0986
$93     0x4A
```

4.2.4.4.4 Program TX Timer (Task 11)

Load the argument in register $8E, then issue task 11. Where the argument is defined by, the number of 4ms time units,

$$Argument = INT\left(0.5 + \frac{T}{4 \cdot 10^{-3}}\right)$$

For example, to set up a recurring 10s TX timer with IRQ enabled set the argument to 2500 = 0x09C4 (at each IRQ the sub-audio status in binary is x111 1111, TX timer status is cleared to zero after reading status register).

```
$8E     0x09C4
$93     0x4B
```

wait ≥ 250µs
$93 0x60 (enable interrupts)

4.2.4.5 Initialize and Configure

4.2.4.5.1 Enter Fast Initialization Mode (Task 12)

Issuing task 12 takes the tone signaling processor out of normal running mode and dedicates the processor to handling initialization tasks to increase the maximum task rate. In this mode neither the tone encoders nor the decoders run. To return to normal running mode issue task 0. In this fast initialization mode tasks can be issued at a rate of one per 50µs. Ensure that the required argument registers are not updated for at least this time after a task is issued.

4.2.4.5.2 Quickly Enable/Disable Multiple Detectors (Task 13)

Issuing task 13 places the tone signaling processor in a mode that allows multiple detectors to be to be quickly configured. Like for task 12 neither the tone encoders nor the decoders run in this mode. The argument data is defined as for task 4. This mode reverts to Fast Initialization Mode when any other task is issued. To return to normal running mode issue task 0. The following example shows how to enable only Tone detectors 1, 7, 10, 12, 18, and 20. Multiple calls to Task 4 can accomplish this, but would require more C-BUS transactions and waiting 250µs after each task 4 call, but could allow the tone decoders to continue to run.

```
// to disable all tone detectors and enter mode to quickly enable multiple detectors
$95     0x3F
$93     0x4D            // value = 0x40 | 0x0D
wait 250µs              // to ensure device runs Task 13
$95     0x81            // to enable tone detector 1 (67.0 Hz)  value = 0x80 | 0x01
wait 50µs               // to ensure task completes
$95     0x87            // to enable tone detector 7 (82.5 Hz)
wait 50µs               // to ensure task completes
$95     0x8A            // to enable tone detector 10 (91.5 Hz)
wait 50µs               // to ensure task completes
$95     0x8C            // to enable tone detector 12 (97.4 Hz)
wait 50µs               // to ensure task completes
$95     0x92            // to enable tone detector 18 (118.8 Hz)
wait 50µs               // to ensure task completes
$95     0x94            // to enable tone detector 20 (127.3 Hz)
wait 50µs               // to ensure task completes
// to place device back in normal running mode
$93     Power Control + IRQ Control + Task 0
```

4.2.4.5.3 Configure Aux Pin as Output (Task 14)

Task 14 can be used to select and enable various digital outputs at the AUX pin. Load the argument data in register $95 then issue the task.

The argument data has the following format in the 8 bit task data register ($95).

<table>
<tr><th>Bit 7</th><th>Bit 6-3</th><th>Bit 2-0 (These bits are Don’t Care if Bit 7 is a logic 0)</th></tr>
<tr><td>1=enable aux pin as output
0=enable aux pin as input</td><td>Don’t care</td><td>
<table>
<tr><th>Bit 2</th><th>Bit 1</th><th>Bit 0</th><th>AUX output signal</th></tr>
<tr><td>1</td><td>0</td><td>0</td><td>RX Decode Status bit</td></tr>
<tr><td>1</td><td>0</td><td>1</td><td>Audio Frequency Ringing Tone</td></tr>
<tr><td>1</td><td>1</td><td>0</td><td>Output logic 0</td></tr>
<tr><td>1</td><td>1</td><td>1</td><td>Output logic 1</td></tr>
</table>
</td></tr>
</table>

For example to have the device produce a 620Hz ringing tone frequency set up the ringing frequency with task 10 then enable the output with task 14. Note that once the Audio Ringing Generator is enabled the frequency can be changed by reissuing task 10.

```
$8E     0x0986          // 620 Hz
$93     0x4A
```

wait 250μs

```
$95     0x85
$93     0x4E
```

wait at least 250 μs

```
$8E     0x06C2          // 440 Hz
$93     0x4A
```

4.2.4.5.4 Soft Reset (Task 15)

The tone signaling processor must be fully initialized after the chip is powered up. After powering up, the first time the tone-signaling processor is enabled, it should be with the task field set to 15. This clears the configuration memory and reverts to Fast Initialization Mode when any other task is issued. After all desired initialization is performed, return to normal running mode by issuing task 0.

Power up Sequence

```
//Power up the Device
// issue general reset
$01
// set up base band clocks before enabling the sub-audio processor
$89     0xXX            // specific setting depends on your system (See Section 5.1.2.7)
$8A     0xXX            // specific setting depends on your system (See Section 5.1.2.8)
// issue Sub-audio processor soft reset
$93     0x4F
// wait for soft reset to complete
```

wait 250μs

```
// set up TX sub-audio frequency
$95     TX tone index
$93     0x48
// set up one RX sub-audio frequency
$95     (0x80 | RX tone index)
$93     0x44
// setup normal run mode for sub-audio processor
$93     (0x40 | IRQ control | Task 0)
// setup RX and TX sub-audio analog trimmers to 0dB
$97     0x1010
```

// setup other C-BUS registers as needed (e.g. Register $80 to select TX/$\overline{RX}$, $88 for TX Mod 1 and Mod 2 Control, etc.)

4.3 RF Synthesizer

This section describes the implemented core functions of an Integer-N frequency Synthesizer. This includes modules for the RF 32/33 prescaler, programmable divider, phase detector, lock indicator, reference counter and charge pump. The Block diagram for the module is shown in Figure 20.

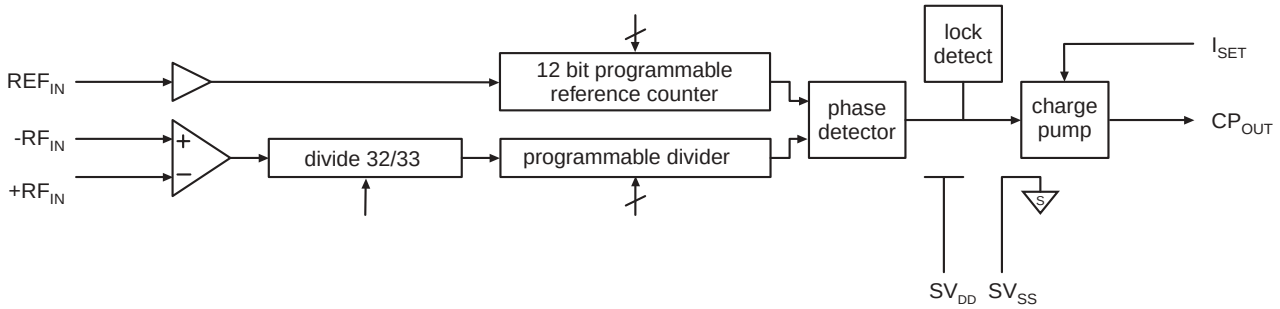

Figure 20: RF Synthesizer block diagram.

4.3.1 Operating Range and Specifications

The RF synthesizer is capable of supporting narrowband (6.25kHz < channel BW <25kHz) applications in the RF range from 100MHz to 500MHz. In other words, there are no blind channels over this range.

4.3.2 Main Divider

An input buffer amplifies and limits the RF signal from the VCO to a level that drives the dual modulus prescaler. The main RF divider is implemented using the dual-modulus 32/33 prescaler in conjunction with a programmable counter. This counter is realized using two programmable counters (**A** & **M** Counters).
The **M**-counter uses a 12-bit programming word and the A-counter uses a 5-bit word, see Figure 21.

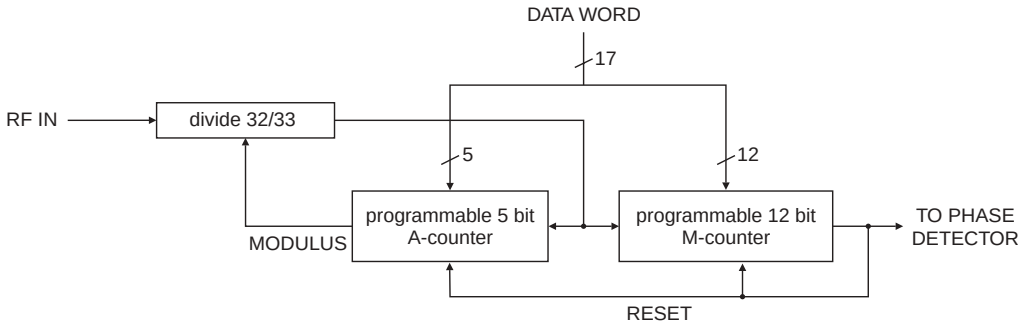

Figure 21: Block diagram of main programmable divider.

The forward division ratio, N, can be expressed as:

$$N = (32M + A)$$

Where **A** and **M** represent the programmed data words.

4.3.3 Phase Detector & Charge Pump

A Phase/Frequency detector is implemented where steps have been taken to remove the dead-band normally associated with this type of detector and charge pump arrangement.

An external resistor, R_{SET}, sets I_{CHP}, the nominal charge pump current. The current through this resistor is set by a 1.26V on-chip reference at the I_{SET} pin where, $I_{SET} = 1.26 \div R_{SET.}$ The magnitude of the charge pump current is either $40*I_{SET}$ or $80*I_{SET}$ depending upon the state of the IHL bit programmed through the C-BUS serial interface, see Section 5.1.2.8 for programming details.

$$IHL = 0,\ I_{CHP} = 40*I_{SET}$$

$$IHL = 1,\ I_{CHP} = 80*I_{SET}$$

The value of R_{SET} can vary between about 50kΩ and 250kΩ. This gives a charge pump current range of 0.2mA to 2.0mA.

4.3.4 Lock Detect Output

The Lock detect status is active high when the phase error corresponds to a time difference of less than about 20ns, 40ns, 60ns, or 80ns at the phase detector comparison inputs. The comparison period is chosen using the Lock Delay bits of the Channel Select Register ($8B). The lock status is updated according to the lock detect mode chosen using the Synthesizer General Control Register ($8A). Lock detect data is collected once every period of the reference signal.

4.3.5 Reference Circuits

The input from the external crystal oscillator is buffered and amplified to CMOS levels. This reference signal is then divided in frequency by a 12-Bit programmable counter.

The Reference Divider is loaded from a ROM that yields one of four possible reference frequencies: 6.25kHz, 12.5kHz, 20kHz, and 25kHz. Frequency selection is dependent on the RF service bits of the Synthesizer General Control Register ($8A) or two of the channel select bits when generic RF service is chosen ($8B).

4.4 Baseband Timing Generation

Internal baseband timing is developed from a configurable choice of two sources: a crystal clock signal (XTAL/CLOCK) or an externally applied synthesizer reference clock signal (REF_{IN}). An on-chip crystal oscillator amplifier is provided to form a crystal oscillator via the addition of an external crystal.

Several frequency options are supported for both crystal and synthesizer clock source options.

Configuration details are described in Section 5.1.2.7.

5 Software Programming

5.1 C-BUS Serial Interface

C-BUS is the serial interface used by a μC to transfer data, control, and status information, to and from the internal registers of the chip. Every transaction consists of one address byte that may be followed by one or two bytes of data.

Data sent from the μC to the chip on the CMD DATA line is clocked in on the rising edge of SERIAL CLOCK. RPLY DATA sent from the chip to the μC is valid when SERIAL CLOCK is high. See Figure 22. This serial interface is compatible with most common μC serial interfaces such as SCI, SPI, and Microwire.

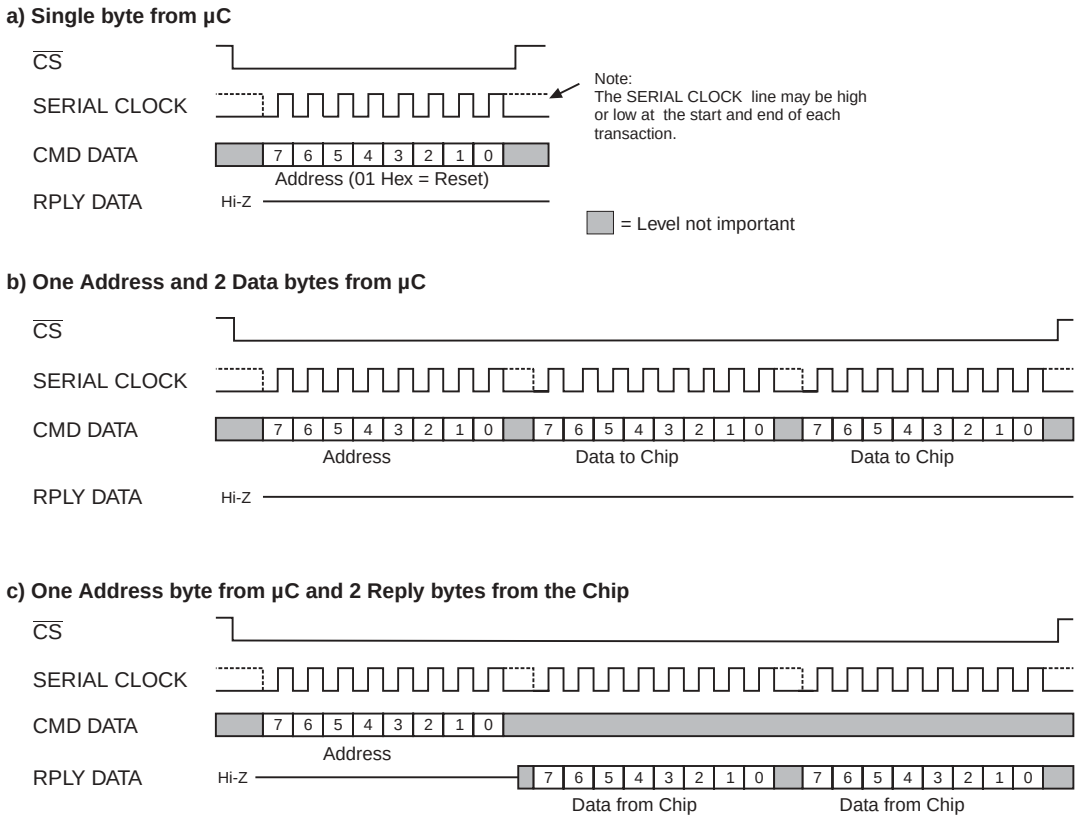

Figure 22: C-BUS transaction timing diagram.

5.1.1 8-Bit C-BUS Register Map

8 BIT REGISTER NAME	BIT 7	BIT 6	BIT 5	BIT 4	BIT 3	BIT 2	BIT 1	BIT 0
GENERAL RESET [Write $01]	N/A							
SETUP REGISTER [Write $80]	TX enable	Audio Path Control						UNUSED
		Input 1 control		Input 2 control		Output control		
AUDIO CONTROL [Write $81]	Audio Filter bypass control			AUDIO LEVEL +/- 7.5dB in 0.5dB steps				
	Pre-emphasis Low-pass bypass control		High-pass bypass control					
RX VOLUME CONTROL [Write $82]	Limiter & Limiter Filter & De-emphasis bypass control			VOLUME CONTROL +12 to –33dB in 1.5dB steps				
AUDIO POWER AND BW CONTROL [WRITE $83]	POWER CONTROL FOR MOD 1 & 2 AND MICAMP		POWER CONTROL FOR AUDIO FILTERS AND LIMITER		POWER CONTROL FOR VOLUME CONTROL		AUDIO BAND-WIDTH SEL	UNUSED
SYNTHESIZER BASEBAND CLK CONTROL [Write $89]	SYNTHESIZER & BASEBAND CLOCK SOURCE SELECT		SYNTHESIZER REFERENCE INPUT FREQUENCY SELECT				XTAL/CLOCK INPUT FREQUENCY SELECT	
SYNTHESIZER GENERAL CONTROL [Write $8A]	ENABLE, POWERSAVE, & TEST MODE CONTROL		LOCK DETECTOR CONTROL & IRQ MASK		CHARGE PUMP CURRENT		RF SYSTEM FRS, GMRS, PMR 446, or GENERIC	
					HIGH LOW	polarity		
SYNTHESIZER CHANNEL SEL [Write $8B]	RESERVED SET TO "0"		LOCK DETECT WINDOW 20 to 80ns		CHANNEL SELECTION INDEXED CONTROL OF VALID FRS, GMRS & PMR446 RF CHANNELS			
					IN GENERIC RF SYSTEM MODE (set in [SGC]) SYNTHESIZED FREQUENCY IS SET VIA THESE BITS AND BITS IN [SBCC] & [SIFOS] REGISTERS			
SYNTHESIZER STATUS [Read $8C]	Lock Algorithm Status	LOCK STATUS OF MOST RECENT 7 PHASE COMPARISONS						
TEST 0 [WRITE $90]	SYNTHESIZER TEST MODES							
TONE SIGNALING CONTROL [Write $93]	POWER CONTROL FOR SUBAUDIO		SUBAUDIO IRQ CONTROL		SUBAUDIO TASK SELECTION			
SUBAUDIO STATUS [Read $94] [SAS]	SYNTHESIZER IRQ FLAG	Decode	Decoded Tone Index					
8 BIT SUBAUDIO TASK DATA [Write $95]	SUBAUDIO TASK DATA BYTE							
8 BIT SUBAUDIO TEST DATA [Write $96]	SUBAUDIO TEST DATA BYTE							

Table 4: 8 Bit Registers

5.1.2 16-Bit C-BUS Register Map

<table>
<tr><th>16 BIT REGISTER NAME</th><th>BIT 15 / BIT 7</th><th>BIT 14 / BIT 6</th><th>BIT 13 / BIT 5</th><th>BIT 12 / BIT 4</th><th>BIT 11 / BIT 3</th><th>BIT 10 / BIT 2</th><th>BIT 9 / BIT 1</th><th>BIT 8 / BIT 0</th></tr>
<tr><td rowspan="4">TX MOD 1&2 CONTROL [Write $88]</td><td colspan="3">MOD 2 switch bank Control</td><td colspan="5" rowspan="2">MOD 2 LEVEL
+/- 3.75dB in 0.25dB steps</td></tr>
<tr><td>0/180 phase select</td><td>SUB-AUDIO enable</td><td>AUDIO enable</td></tr>
<tr><td colspan="3">MOD 1 switch bank Control</td><td colspan="5" rowspan="2">MOD 1 LEVEL
+/- 7.5dB in 0.5dB steps</td></tr>
<tr><td>0/180 phase select</td><td>SUB-AUDIO enable</td><td>AUDIO enable</td></tr>
<tr><td>SYNTHESIZER 1ST IF OFFSET [Write $8D] [SIFOS]</td><td colspan="8">SIGNED 16 Bit NUMBER PROPORTIONAL TO IF OFFSET, AUTOMATICALLY APPLIED WHEN DEVICE IS IN RX MODE [SR] & ONE OF THREE SPECIFIC RF SYSTEM MODES (FRS, GMRS, PMR 446) IS SELECTED IN [SGC]
IN GENERIC RF SYSTEM MODE (SELECTED IN [SGC]), SYNTHESIZED FREQUENCY IS SET DIRECTLY VIA THESE 16 BITS AND BITS IN [SBCC] & [SCS] REGISTERS</td></tr>
<tr><td>16 BIT SUBAUDIO TASK DATA [Write $8E]</td><td colspan="8">SUBAUDIO TASK DATA WORD</td></tr>
<tr><td>16 BIT SUBAUDIO TEST DATA [Write $8F]</td><td colspan="8">SUBAUDIO TEST DATA WORD</td></tr>
<tr><td>16 BIT SUBAUDIO TEST READ DATA [Read $91]</td><td colspan="8">SUBAUDIO TEST READ WORD</td></tr>
<tr><td rowspan="2">SUBAUDIO ANALOG CONTROL [Write $97]</td><td colspan="4">Subaudio filter path control</td><td colspan="4">TX Level Control +/-7.5dB in 0.5dB steps</td></tr>
<tr><td colspan="4">Subaudio filter path control</td><td colspan="4">RX Level Control +/-7.5dB in 0.5dB steps</td></tr>
</table>

Table 5: 16 Bit Registers

5.1.2.1 GENERAL RESET ($01)

The reset command has no data attached to it. Application of the GENERAL RESET, sets all write only register bits to ‘0’.

5.1.2.2 SETUP Register ($80)

<table>
<tr><td>TRANSMIT/ RECEIVE
(TX/$\overline{RX}$)
Bit 7</td><td>In the Audio section, this bit controls a single pole single throw switch in the audio path between the deviation limiter/low-pass filter and the transmit modulation digitally controlled amplifiers. A logic ‘1’ allows audio to flow between these blocks. In the synthesizer section, this bit in conjunction with the synthesizer intermediate frequency offset register (SIFOS register) allows for autonomous switching between two synthesizer frequencies (for example where the required receive frequency equals the transmit center frequency offset high or low by the radios first intermediate frequency). A logic ‘1’ will enables synthesis of the transmit frequency, while a logic ‘0’ enables the offset frequency. In the subaudio section, this bit enables the subaudio encoder (logic ‘1’) or decoder (logic ‘0’).</td></tr>
<tr><td>AUDIO INPUT 1 SELECT
Bit 6 and Bit 5</td><td>A 3-1 mux allows audio to be selected from the microphone amplifier output, the receive input, or the auxiliary input. Reference Figure 3.
<table>
<tr><th>Bit 6</th><th>Bit 5</th><th>Result</th></tr>
<tr><td>0</td><td>0</td><td>No inputs selected.</td></tr>
<tr><td>1</td><td>0</td><td>AUX I/O</td></tr>
<tr><td>0</td><td>1</td><td>RXIN</td></tr>
<tr><td>1</td><td>1</td><td>MICOUT</td></tr>
</table></td></tr>
<tr><td>AUDIO INPUT 2 SELECT
Bit 4 and Bit 3</td><td>A 3-1 mux allows audio to be selected from A_{IN} (external input), B_{IN} (external input), or the internal high-pass filter output. The external inputs are available for external audio processing such as companding and voice scrambling. Reference Figure 3.
<table>
<tr><th>Bit 4</th><th>Bit 3</th><th>Result</th></tr>
<tr><td>0</td><td>0</td><td>No inputs selected.</td></tr>
<tr><td>1</td><td>0</td><td>A_{IN}</td></tr>
<tr><td>0</td><td>1</td><td>B_{IN}</td></tr>
<tr><td>1</td><td>1</td><td>HPF OUT</td></tr>
</table></td></tr>
<tr><td>AUDIO OUTPUT SELECT
Bit 2 and Bit 1</td><td>A 3-1 mux allows audio to be directed to A_{OUT} (external output), B_{OUT} (external output), or to the internal deviation limiter/low-pass filter. The external outputs are available for external audio processing such as companding and voice scrambling. Reference Figure 3
<table>
<tr><th>Bit 2</th><th>Bit 1</th><th>Result</th></tr>
<tr><td>0</td><td>0</td><td>No Outputs active, A_{OUT} and B_{OUT} are held at $V_{DD}/2$</td></tr>
<tr><td>1</td><td>0</td><td>A_{OUT} selected, B_{OUT} held at $V_{DD}/2$.</td></tr>
<tr><td>0</td><td>1</td><td>B_{OUT} selected, A_{OUT} held at $V_{DD}/2$</td></tr>
<tr><td>1</td><td>1</td><td>LPF/LIM INPUT</td></tr>
</table></td></tr>
<tr><td>Bit 0</td><td>Unused, must be set to logic 0</td></tr>
</table>

Table 6: SETUP Register ($80)

5.1.2.3 AUDIO CONTROL Register ($81)

PRE-EMPHASIS/LPF CONTROL (PRE LPF CTRL) Bit 7 and Bit 6

The first stage of filtering following Input Mux 1 can be configured as a 2nd order low-pass filter, as a pre-emphasis network or bypassed. Reference Figure 3.

Bit 7	Bit 6	Result
0	0	Pre-emphasis
0	1	Low-pass filter
1	0	Mute, output is held to $V_{DD}/2$
1	1	bypass

HIGHPASS FILTER BYPASS Bit 5

When this bit is a Logic '1' the high-pass audio filter is bypassed. Reference Figure 3.

Audio Level Bit 4,3,2,1,0

The five least significant bits in this register are used to set the gain/attenuation of the audio level control as shown in the table below. This digitally controlled amplifier is located in the audio path between the input low-pass filter/pre-emphasis network and the 6th order high-pass filter. Its primary purpose is to trim the nominal audio level such that the dynamic range is maximized.

4	3	2	1	0	AUDIO GAIN
0	0	0	0	0	Off
0	0	0	0	1	-7.5dB
0	0	0	1	0	-7.0dB
0	0	0	1	1	-6.5dB
0	0	1	0	0	-6.0dB
0	0	1	0	1	-5.5dB
0	0	1	1	0	-5.0dB
0	0	1	1	1	-4.5dB
0	1	0	0	0	-4.0dB
0	1	0	0	1	-3.5dB
0	1	0	1	0	-3.0dB
0	1	0	1	1	-2.5dB
0	1	1	0	0	-2.0dB
0	1	1	0	1	-1.5dB
0	1	1	1	0	-1.0dB
0	1	1	1	1	-0.5dB
1	0	0	0	0	0.0dB
1	0	0	0	1	0.5dB
1	0	0	1	0	1.0dB
1	0	0	1	1	1.5dB
1	0	1	0	0	2.0dB
1	0	1	0	1	2.5dB
1	0	1	1	0	3.0dB
1	0	1	1	1	3.5dB
1	1	0	0	0	4.0dB
1	1	0	0	1	4.5dB
1	1	0	1	0	5.0dB
1	1	0	1	1	5.5dB
1	1	1	0	0	6.0dB
1	1	1	0	1	6.5dB
1	1	1	1	0	7.0dB
1	1	1	1	1	7.5dB

Table 7: AUDIO CONTROL Register ($81)

5.1.2.4 RX AUDIO LEVEL CONTROL Register ($82)

LIMITER BYPASS **Bit 7**	When this bit is a logic ‘1’, the deviation limiter is bypassed.
LOWPASS FILTER BYPASS **Bit 6**	When this bit is a logic ‘1’, the post deviation limiter low-pass Filter is bypassed.
DE-EMPHASIS BYPASS **Bit 5**	When this bit is a logic ‘1’, the de-emphasis network is bypassed.
RX AUDIO LEVEL **Bit 4,3,2,1,0**	The five least significant bits in this register are used to set the gain/attenuation of the volume control according to the table below:

4	3	2	1	0	Increment Per Step = 1.5dB Steps
0	0	0	0	0	Off
0	0	0	0	1	-33.0dB
0	0	0	1	0	-31.5dB
0	0	0	1	1	-30.0dB
0	0	1	0	0	-28.5dB
0	0	1	0	1	-27.0dB
0	0	1	1	0	-25.5dB
0	0	1	1	1	-24.0dB
0	1	0	0	0	-22.5dB
0	1	0	0	1	-21.0dB
0	1	0	1	0	-19.5dB
0	1	0	1	1	-18.0dB
0	1	1	0	0	-16.5dB
0	1	1	0	1	-15.0dB
0	1	1	1	0	-13.5dB
0	1	1	1	1	-12.0dB
1	0	0	0	0	-10.5dB
1	0	0	0	1	-9.0dB
1	0	0	1	0	-7.5dB
1	0	0	1	1	-6.0dB
1	0	1	0	0	-4.5dB
1	0	1	0	1	-3.0dB
1	0	1	1	0	-1.5dB
1	0	1	1	1	0.0dB
1	1	0	0	0	1.5dB
1	1	0	0	1	3.0dB
1	1	0	1	0	4.5dB
1	1	0	1	1	6.0dB
1	1	1	0	0	7.5dB
1	1	1	0	1	9.0dB
1	1	1	1	0	10.5dB
1	1	1	1	1	12.0dB

Table 8: RX AUDIO LEVEL CONTROL Register ($82)

5.1.2.5 AUDIO POWER AND BANDWIDTH CONTROL Register ($83)

<table>
<tr><td>TX MOD and MIC AMPLIFIER POWER CONTROL
Bit 7 and Bit 6</td><td>These bits are dedicated to power control for the modulation digitally controlled amplifiers and the microphone amplifier
<table><tr><th>Bit 7</th><th>Bit 6</th><th>Power level setting</th></tr><tr><td>0</td><td>0</td><td>Power down (off)</td></tr><tr><td>0</td><td>1</td><td>Normal Operation</td></tr></table></td></tr>
<tr><td>AUDIO FILTER POWER CONTROL
Bit 5 and Bit 4</td><td>These bits are dedicated to power control for the audio filters, the deviation limiter, and the audio level digitally controlled amplifier
<table><tr><th>Bit 5</th><th>Bit 4</th><th>Power level setting</th></tr><tr><td>0</td><td>0</td><td>Power down (off)</td></tr><tr><td>0</td><td>1</td><td>Normal Operation</td></tr></table></td></tr>
<tr><td>RX AUDIO OUT POWER CONTROL
Bit 3 and Bit 2</td><td>These bits are dedicated to power control for the de-emphasis network and the RX Audio Out digitally controlled amplifier.
<table><tr><th>Bit 3</th><th>Bit 2</th><th>Power level setting</th></tr><tr><td>0</td><td>0</td><td>Power down (off)</td></tr><tr><td>0</td><td>1</td><td>Normal Operation</td></tr></table></td></tr>
<tr><td>AUDIO BANDWIDTH CONTROL
Bit 1</td><td>A logic ‘1’ on this bit reduces the –3dB bandwidth of the post deviation limiter low-pass filter from 3.5kHz to 3.0kHz. The narrow band setting is intended for radio systems with RF channel bandwidths ≤ 12.5kHz.</td></tr>
<tr><td>Bit 0</td><td>Unused, must be set to Logic ‘0’</td></tr>
</table>

Table 9: AUDIO POWER AND BANDWIDTH CONTROL Register ($83)

5.1.2.6 TXMOD 1 & 2 CONTROL Register ($88)

TXMOD2 – Reference Figure 3

PHASE CONTROL
0 = 0°
1 = 180°
Bit 15

SUBAUDIO SIGNAL ENABLE
Bit 14

AUDIO SIGNAL ENABLE
Bit 13

MOD2	PHASE CONTROL (Bit 15) 0 = 0°, 1 = 180°	SUBAUDIO SIGNAL ENABLE (Bit 14)	AUDIO SIGNAL ENABLE (Bit 13)
Bias	0	0	0
Audio	0	0	1
Tone	0	1	0
Audio + Tone	0	1	1
Inv (Bias + Offset)	1	0	0
Inv (Audio)	1	0	1
Inv (Tone)	1	1	0
Inv (Audio + Tone)	1	1	1

MOD2 GAIN
Bit 12, 11, 10, 9, 8

Bit 12	Bit 11	Bit 10	Bit 9	Bit 8	Mod. 2 Gain
0	0	0	0	0	Off
0	0	0	0	1	-3.75dB
0	0	0	1	0	-3.50dB
0	0	0	1	1	-3.25dB
0	0	1	0	0	-3.00dB
0	0	1	0	1	-2.75dB
0	0	1	1	0	-2.50dB
0	0	1	1	1	-2.25dB
0	1	0	0	0	-2.00dB
0	1	0	0	1	-1.75dB
0	1	0	1	0	-1.50dB
0	1	0	1	1	-1.25dB
0	1	1	0	0	-1.00dB
0	1	1	0	1	-0.75dB
0	1	1	1	0	-0.50dB
0	1	1	1	1	-0.25dB
1	0	0	0	0	0.00dB
1	0	0	0	1	0.25dB
1	0	0	1	0	0.50dB
1	0	0	1	1	0.75dB
1	0	1	0	0	1.00dB
1	0	1	0	1	1.25dB
1	0	1	1	0	1.50dB
1	0	1	1	1	1.75dB
1	1	0	0	0	2.00dB
1	1	0	0	1	2.25dB
1	1	0	1	0	2.50dB
1	1	0	1	1	2.75dB
1	1	1	0	0	3.00dB
1	1	1	0	1	3.25dB
1	1	1	1	0	3.50dB
1	1	1	1	1	3.75dB

Table 10: TXMOD2 CONTROL Register ($88)

TXMOD1 - Reference Figure 3

PHASE CONTROL
0 = 0°
1 = 180°
Bit 7

SUBAUDIO SIGNAL ENABLE
Bit 6

AUDIO SIGNAL ENABLE
Bit 5

MOD1	PHASE CONTROL (Bit 7) 0 = 0°, 1 = 180°	SUBAUDIO SIGNAL ENABLE (Bit 6)	AUDIO SIGNAL ENABLE (Bit 5)
Bias	0	0	0
Audio	0	0	1
Tone	0	1	0
Audio + Tone	0	1	1
Inv (Bias + Offset)	1	0	0
Inv (Audio)	1	0	1
Inv (Tone)	1	1	0
Inv (Audio + Tone)	1	1	1

MOD1 GAIN
Bit 4-0

Bit 4	Bit 3	Bit 2	Bit 1	Bit 0	Mod. 1 Gain
0	0	0	0	0	Off
0	0	0	0	1	-7.5dB
0	0	0	1	0	-7.0dB
0	0	0	1	1	-6.5dB
0	0	1	0	0	-6.0dB
0	0	1	0	1	-5.5dB
0	0	1	1	0	-5.0dB
0	0	1	1	1	-4.5dB
0	1	0	0	0	-4.0dB
0	1	0	0	1	-3.5dB
0	1	0	1	0	-3.0dB
0	1	0	1	1	-2.5dB
0	1	1	0	0	-2.0dB
0	1	1	0	1	-1.5dB
0	1	1	1	0	-1.0dB
0	1	1	1	1	-0.5dB
1	0	0	0	0	0.0dB
1	0	0	0	1	0.5dB
1	0	0	1	0	1.0dB
1	0	0	1	1	1.5dB
1	0	1	0	0	2.0dB
1	0	1	0	1	2.5dB
1	0	1	1	0	3.0dB
1	0	1	1	1	3.5dB
1	1	0	0	0	4.0dB
1	1	0	0	1	4.5dB
1	1	0	1	0	5.0dB
1	1	0	1	1	5.5dB
1	1	1	0	0	6.0dB
1	1	1	0	1	6.5dB
1	1	1	1	0	7.0dB
1	1	1	1	1	7.5dB

Table 11: TXMOD1 CONTROL Register ($88)

5.1.2.7 SYNTHESIZER BASEBAND CLK CONTROL Register ($89)

CLOCK SOURCE
Bit 7 and Bit 6

D7	D6	Description
0	0	Clock sources off (chip mostly powered down)
0	1	Baseband clock source from XTAL, Synthesizer reference clock from REF_{IN}
1	0	Baseband and Synthesizer Reference clock from REF_{IN} XTAL Amplifier Disabled
1	1	Baseband and Synthesizer Reference clock from REF_{IN} XTAL Amplifier Enabled

REF_{IN} Frequency
Bit 5, 4, 3, and 2

D5	D4	D3	D2	REF_{IN} frequency (MHz)
0	0	0	0	4.0
0	0	0	1	8.0
0	0	1	0	9.6
0	0	1	1	12.0
0	1	0	0	12.8
0	1	0	1	14.4
0	1	1	0	16.8
0	1	1	1	24.0
1	0	0	0	10.25
1	0	0	1	10.475
1	0	1	0	20.95
1	0	1	1	21.25
1	1	0	0	N/A
1	1	0	1	
1	1	1	0	
1	1	1	1	

XTAL/CLOCK FREQUENCY
Bit 1 and 0

D1	D0	XTAL/CLOCK frequency (MHz)
0	0	4.0
0	1	8.0
1	0	9.6
1	1	12.0

Table 12: SYNTHESIZER BASEBAND CLK CONTROL Register ($89)

5.1.2.8 SYNTHESIZER GENERAL CONTROL Register ($8A)

SYNTHESIZER POWER CONTROL
Bit 7 and Bit 6

D7	D6	Description
0	0	Synthesizer is powered down
0	1	Synthesizer is enabled.
1	0	Synthesizer Reference Clock Buffer is powered - the remainder of the Synthesizer is powered down.
1	1	Reserved for Test Mode.

LOCK CONTROL
Bit 5 and Bit 4

D5	D4	Description
0	0	Lock Detect IRQ is masked
0	1	Lock Detect IRQ is enabled (status updated every phase comparison when the last two comparisons disagree)
1	0	Lock Detect IRQ is enabled (IRQ updated instantly for loss of lock, IRQ updated after 8 consecutive in-lock phase compares to indicate lock)
1	1	Lock Detect IRQ is enabled (IRQ updated after 4 out of lock comparisons during the last 8, IRQ updated after 16 consecutive in-lock phase compares to indicate lock).

IHL
Bit 3

Reference Section 4.3.3 Phase Detector and Charge Pump

D3	Description
0	$I_{CHP} = 40\ I_{SET}$
1	$I_{CHP} = 80\ I_{SET}$

POLARITY OF CHARGE PUMP OUTPUT
Bit 2

D2	Description
0	Negative VCO V/F slope
1	Positive VCO V/F slope)

RF SERVICE
Bit 1 and Bit 0

D1	D0	Description
0	0	Select FRS channels ($SYNTH_{REF}$ = 12.5kHz)
0	1	Select PMR 446 channels ($SYNTH_{REF}$ = 6.25kHz)
1	0	Select GMSR channels ($SYNTH_{REF}$ = 12.5kHz) (this does not include the upper frequency band of GMRS which is reserved for duplex operation in a GMRS system)
1	1	Generic System (RF and Reference Dividers are Directly programmed)

Table 13: SYNTHESIZER GENERAL CONTROL Register ($8A)

5.1.2.9 SYNTHESIZER CHANNEL SELECT Register ($8B)

<table>
<tr><td>Bit 7 and Bit 6</td><td>Always set these two bits to logic 0.</td></tr>
<tr><td>LOCK DETECT WINDOW
Bit 5 and Bit 4</td><td>
<table>
<tr><th>D5</th><th>D4</th><th>Description</th></tr>
<tr><td>0</td><td>0</td><td>Lock Detect Comparison Window Set to ±20ns</td></tr>
<tr><td>0</td><td>1</td><td>Lock Detect Comparison Window Set to ±40ns</td></tr>
<tr><td>1</td><td>0</td><td>Lock Detect Comparison Window Set to ±60ns</td></tr>
<tr><td>1</td><td>1</td><td>Lock Detect Comparison Window Set to ±80ns</td></tr>
</table>
</td></tr>
<tr><td>CHANNEL SELECT
Bit 3-0</td><td>
<table>
<tr><th rowspan="2">D3</th><th rowspan="2">D2</th><th rowspan="2">D1</th><th rowspan="2">D0</th><th colspan="3">RF CARRIER FREQUENCY (MHz)</th></tr>
<tr><th>FRS
See Note 1</th><th>PMR 446
See Note 2</th><th>GMRS
See Note 3</th></tr>
<tr><td>0</td><td>0</td><td>0</td><td>0</td><td>N/A</td><td>N/A</td><td>N/A</td></tr>
<tr><td>0</td><td>0</td><td>0</td><td>1</td><td>462.5625</td><td>446.00625</td><td>462.5500</td></tr>
<tr><td>0</td><td>0</td><td>1</td><td>0</td><td>462.5875</td><td>446.01875</td><td>462.5625</td></tr>
<tr><td>0</td><td>0</td><td>1</td><td>1</td><td>462.6125</td><td>446.03125</td><td>462.5750</td></tr>
<tr><td>0</td><td>1</td><td>0</td><td>0</td><td>462.6375</td><td>446.04375</td><td>462.5875</td></tr>
<tr><td>0</td><td>1</td><td>0</td><td>1</td><td>462.6625</td><td>446.05625</td><td>462.6000</td></tr>
<tr><td>0</td><td>1</td><td>1</td><td>0</td><td>462.6875</td><td>446.06875</td><td>462.6125</td></tr>
<tr><td>0</td><td>1</td><td>1</td><td>1</td><td>462.7125</td><td>446.08125</td><td>462.6250</td></tr>
<tr><td>1</td><td>0</td><td>0</td><td>0</td><td>467.5625</td><td>446.09375</td><td>462.6375</td></tr>
<tr><td>1</td><td>0</td><td>0</td><td>1</td><td>467.5875</td><td>N/A</td><td>462.6500</td></tr>
<tr><td>1</td><td>0</td><td>1</td><td>0</td><td>467.6125</td><td>N/A</td><td>462.6625</td></tr>
<tr><td>1</td><td>0</td><td>1</td><td>1</td><td>467.6375</td><td>N/A</td><td>462.6750</td></tr>
<tr><td>1</td><td>1</td><td>0</td><td>0</td><td>467.6625</td><td>N/A</td><td>462.6875</td></tr>
<tr><td>1</td><td>1</td><td>0</td><td>1</td><td>467.6875</td><td>N/A</td><td>462.7000</td></tr>
<tr><td>1</td><td>1</td><td>1</td><td>0</td><td>467.7125</td><td>N/A</td><td>462.71250</td></tr>
<tr><td>1</td><td>1</td><td>1</td><td>1</td><td>N/A</td><td>N/A</td><td>462.72500</td></tr>
</table>
Note 1: $8A (D1 = 0, D0 = 0)
Note 2: $8A (D1 = 0, D0 = 1)
Note 3: $8A (D1 = 1, D0 = 0)
</td></tr>
<tr><td>REFERENCE DIVIDER for Generic Service Mode
Bit 3-0
See Note 2</td><td>
<table>
<tr><th>D3</th><th>D2</th><th>D1</th><th>D0</th><th>Reference Divider output frequency (kHz)</th></tr>
<tr><td>0</td><td>0</td><td>0</td><td rowspan="4">See Note 1</td><td>6.25</td></tr>
<tr><td>0</td><td>0</td><td>1</td><td>12.5</td></tr>
<tr><td>0</td><td>1</td><td>0</td><td>20.0</td></tr>
<tr><td>0</td><td>1</td><td>1</td><td>25.0</td></tr>
</table>
Note 1: See Register $8D
Note 2: This section is used if Register $8A (D1 = 1, D0 = 1)
</td></tr>
</table>

Table 14: SYNTHESIZER CHANNEL SELECT Register ($8B)

5.1.2.10 SYNTHESIZER STATUS Register ($8C)

This read register stores the lock detect status of the most recent 7 phase comparisons and the current state of the lock detect circuitry. Refer to the Synthesizer General Control Register ($8A) for information on Lock Detect Control and IRQ behavior. D0 is the most recent comparison D6 is the least recent, and D7 is the current state.

5.1.2.11 SYNTHESIZER 1ST IF OFFSET Register ($8D)

D15	D14	D13	D12	D11	D10	D9	D8	D7	D6	D5	D4	D3	D2	D1	D0

If RF Service SYNTHESIZER GENERAL CONTROL Register ($8A) Bits D1 and D0 are set to FRS (=0), PMR 446 (=1) or GMRS (=2).

These 16 bits represent a signed binary number for the offset from the TX frequency to mix down to the first IF.

The synthesizer will automatically offset the synthesized frequency when the General Control Register TX bit is clear. The offset will be equal to:

Synthesizer IF Offset (SIFOS) x Reference Oscillator Frequency ($SYNTH_{REF}$)

Note, $SYNTH_{REF}$ is selected by the RF service control bits of the Synthesizer General Control Register and SIFOS is a 16 bit signed number formed by bits D[15:0]

D[15:0] = (IF frequency offset)/ $SYNTH_{REF}$

For example for a high side IF of 21.4MHz

D[15:0] = 1712 (06B0 hex) for FRS and GMRS
D[15:0] = 3424 (0D60 hex) for PMR 446

For a low side IF of 45MHz

D[15:0] = -3600 (F1F0 hex) for FRS and GMRS
D[15:0] = -7200 (E3E0 hex) for PMR 446

M10	M9	M8	M7	M6	M5	M4	M3	M2	M1	M0	A4	A3	A2	A1	A0

If generic system RF service is selected, Synthesizer General Control Register ($8A: D1= 1, D0 = 1); then the RF divider is directly programmed via Synthesizer Channel Select Register ($8B):D0=M11, SIFOS:D[15:5] = M[10:0], and SIFOS:D[4:0] = A[4:0]

RF divider N = 32 x M[11:0] + A[4:0]

In the Generic Service mode this register must be reloaded to switch between RX and TX to account for the first IF Offset.

The Synthesized Frequency will be

N x $SYNTH_{REF}$

where $SYNTH_{REF}$ is set via Synthesizer Channel Select Register ($8B):D[2:1] = R[1:0]. Note the register Synthesizer Baseband Clock Control must also be set properly for the $SYNTH_{REF}$ to come out right.

5.1.2.12 16 BIT SUBAUDIO TASK DATA Register ($8E)

Bit(s)	Description
Bit 15-0	This register is used to download 16 bit initialization/configuration data to the tone signaling processor. Refer to section 4.2.4 for task descriptions.

Table 15: 16 BIT SUBAUDIO TASK DATA Register ($8E)

5.1.2.13 16 BIT SUBAUDIO TEST DATA Register ($8F)

Bit(s)	Description
Bit 15-0	This register is reserved for device test modes.

Table 16: 16 BIT SUBAUDIO TEST DATA Register ($8F)

5.1.2.14 SYNTHESIZER TEST Register ($90)

Bit(s)	Description
Bit 7-0	This register is reserved for device test modes.

Table 17: SYNTHESIZER TEST Register ($90)

5.1.2.15 16 BIT SUBAUDIO TEST READ DATA Register ($91)

Bit(s)	Description
Bit 15-0	This register is reserved for device test modes.

Table 18: 16 BIT SUBAUDIO TEST READ DATA Register ($91)

5.1.2.16 TONE SIGNALING CONTROL Register ($93)

<table>
<tr><th>Bit(s)</th><th>Description</th></tr>
<tr><td>SUBAUDIO POWER CONTROL
Bit 7 and Bit 6</td><td>These bits are dedicated to power control for the subaudio section.
<table>
<tr><th>Bit 7</th><th>Bit 6</th><th>Power level setting</th></tr>
<tr><td>0</td><td>0</td><td>Power down (off)</td></tr>
<tr><td>0</td><td>1</td><td>Enabled</td></tr>
</table></td></tr>
<tr><td>IRQ CONTROL
Bit 5 and Bit 4</td><td>
<table>
<tr><th>Bit 5</th><th>Bit 4</th><th></th></tr>
<tr><td>0</td><td>0</td><td>No IRQ</td></tr>
<tr><td>0</td><td>1</td><td>IRQ when detect status change</td></tr>
<tr><td>1</td><td>0</td><td>IRQ when detect status change and Subaudio tone change detected</td></tr>
<tr><td>1</td><td>1</td><td>IRQ as in “1 0” setting but detect algorithm modified to detect after a single qualifying measurement instead of the normal 2 agreeing measurements. This decreased response time comes at the expense of increased false response rate.</td></tr>
</table></td></tr>
<tr><td>SUBAUDIO TASK
Bit 3-0</td><td>
<table>
<tr><th></th><th>Bit 3</th><th>Bit 2</th><th>Bit 1</th><th>Bit 0</th><th>Cross Reference Section</th><th>Description</th></tr>
<tr><td>Normal Run Mode</td><td>0</td><td>0</td><td>0</td><td>0</td><td>4.2.4.1</td><td>Normal Operation</td></tr>
<tr><td rowspan="3">Reserved For Test</td><td>0</td><td>0</td><td>0</td><td>1</td><td rowspan="3">4.2.4.2</td><td rowspan="3">Reserved for test
(do not use these tasks)</td></tr>
<tr><td>0</td><td>0</td><td>1</td><td>0</td></tr>
<tr><td>0</td><td>0</td><td>1</td><td>1</td></tr>
<tr><td rowspan="4">RX Configure</td><td>0</td><td>1</td><td>0</td><td>0</td><td>4.2.4.3.1</td><td>Enable/Disable Tone Detector</td></tr>
<tr><td>0</td><td>1</td><td>0</td><td>1</td><td>4.2.4.3.2</td><td>Program User Defined Subaudio Tone</td></tr>
<tr><td>0</td><td>1</td><td>1</td><td>0</td><td>4.2.4.3.3</td><td>Adjust Detector Band Width</td></tr>
<tr><td>0</td><td>1</td><td>1</td><td>1</td><td>4.2.4.3.4</td><td>Adjust No Tone Timer Duration</td></tr>
<tr><td rowspan="4">TX Configure</td><td>1</td><td>0</td><td>0</td><td>0</td><td>4.2.4.4.1</td><td>Select Sub-Audio Tone From Preprogrammed List</td></tr>
<tr><td>1</td><td>0</td><td>0</td><td>1</td><td>4.2.4.4.2</td><td>Program User Defined Subaudio Tone</td></tr>
<tr><td>1</td><td>0</td><td>1</td><td>0</td><td>4.2.4.4.3</td><td>Program Audio Frequency Ringing Tone</td></tr>
<tr><td>1</td><td>0</td><td>1</td><td>1</td><td>4.2.4.4.4</td><td>Program TX Timer</td></tr>
<tr><td rowspan="4">Initialize and Configure</td><td>1</td><td>1</td><td>0</td><td>0</td><td>4.2.4.5.1</td><td>Enter Fast Initialization Mode</td></tr>
<tr><td>1</td><td>1</td><td>0</td><td>1</td><td>4.2.4.5.2</td><td>Quickly Enable/Disable Multiple Detectors</td></tr>
<tr><td>1</td><td>1</td><td>1</td><td>0</td><td>4.2.4.5.3</td><td>Configure Aux Pin as Output</td></tr>
<tr><td>1</td><td>1</td><td>1</td><td>1</td><td>4.2.4.5.4</td><td>Soft Reset</td></tr>
</table></td></tr>
</table>

Table 19: TONE SIGNALING CONTROL Register ($93)

5.1.2.17 SUBAUDIO STATUS Register ($94)

Bit(s)	Description
SYNTH_IRQ **Bit 7**	This bit indicates whether the synthesizer lock detector issued an IRQ since the last read of the synthesizer status register. Once the lock detector issues an IRQ this bit becomes a logic '1' and the chip $\overline{IRQ}$ pin is pulled low. SYNTH_IRQ bit remains a logic '1' until the synthesizer status register is read. However, the chip's IRQ is cleared as soon as this subaudio status register is read. In other words, when servicing an IRQ, read the subaudio status register and check this bit to determine if the synthesizer needs servicing.
DECODER STATUS **Bit 6**	In RX mode, the decode status bit is a logic one when an enabled decoder senses that the input signal matches its center frequency and is of sufficient quality to decode In TX mode, bits 6-0 are normally zero, but take the decimal value 127 to indicate when the TX timer has expired. Reading the status register resets bits 6-0 to zero as well as clearing the $\overline{IRQ}$ in TX mode to allow recurring indication of TX timer expiration. In RX mode, only the $\overline{IRQ}$ is cleared on reading this status register, while the decode status and tone index are maintained and continuously reported here.
TONE INDEX NUMBER **Bit 5-0**	Refer to Table 2 for supported Tone List and their index numbers. Index numbers 1-51 indicate a matching decoder (enabled decoder index may be reported before the full decode qualification of 2 matching measurements). In TX mode, bits 6-0 are normally zero, but take the decimal value 127 to indicate when the TX timer has expired. If the input signal does not contain a subaudio signal that matches an enabled decoder's center frequency then the decoder status bit is a logic zero – in this case the decoder index number is reported as: • 62 if there is a significant subaudio frequency present outside the bandwidth of any enabled decoder. • 63 if the no tone timer has expired indicating (i.e. there is no significant subaudio frequency present currently) • 0 if no subaudio signal has been seen since the subaudio processor was enabled or most recently placed in RX mode. • Any enabled index, if the last frequency measurement indicates that enabled tone may be present but has not yet been fully qualified.

Table 20: SUBAUDIO STATUS Register ($94)

5.1.2.18 8 BIT SUBAUDIO TASK DATA Register ($95)

Bit(s)	Description
Bit 7-0	This register is used to download 8 bit initialization/configuration data to the subaudio processor. Refer to section 4.2.4 for task descriptions.

Table 21: 8 BIT SUBAUDIO TASK DATA Register ($95)

5.1.2.19 SUBAUDIO ANALOG CONTROL Register ($97)

<table>
<tr><th>Bit(s)</th><th>Description</th></tr>
<tr><td>SUBAUDIO FILTER INPUT SELECT
Bit 15</td><td>Bit 15 in conjunction with TX/$\overline{RX}$ bit (bit 7) of the SETUP Register ($80) controls the input signal source of the subaudio filter according to the following table:
<table>
<tr><th>Bit 15</th><th>TX/$\overline{RX}$</th><th>Input Source</th></tr>
<tr><td>0</td><td>0</td><td>RXIN pin</td></tr>
<tr><td>0</td><td>1</td><td>Encoder D/A</td></tr>
<tr><td>1</td><td>0</td><td>Encoder D/A</td></tr>
<tr><td>1</td><td>1</td><td>RXIN pin</td></tr>
</table>
Bit 15 in conjunction with TX/$\overline{RX}$ form the DECODE control signal of the subaudio analog block according to the above table. In normal operation, this bit should be a logic ‘0’.</td></tr>
<tr><td>SUBAUDIO LOW PASS FILTER 1 GAIN
Bit 14</td><td>Bit 14 in conjunction with TX/$\overline{RX}$ bit (bit 7) of the SETUP Register ($80) controls the gain of the subaudio low pass filter, which is the second subaudio filter stage. The low pass filter gain is set according to the following table:
<table>
<tr><th>Bit 14</th><th>TX/$\overline{RX}$</th><th>Gain (dB)</th></tr>
<tr><td>0</td><td>0</td><td>+20</td></tr>
<tr><td>0</td><td>1</td><td>0</td></tr>
<tr><td>1</td><td>0</td><td>0</td></tr>
<tr><td>1</td><td>1</td><td>+20</td></tr>
</table>
The default gain setting is 0dB for TX mode and +20dB for RX mode. Setting gain to +20dB in TX mode will overdrive the low pass filter resulting in distorted signals. This bit should be a logic ‘0’ for normal operation.</td></tr>
<tr><td>SUBAUDIO HIGH PASS FILTER/ LOW PASS FILTER SELECT
Bit 13</td><td>Bit 13 in conjunction with TX/$\overline{RX}$ bit (bit 7) of the SETUP Register ($80) controls the subaudio filter characteristic of the 2nd filter stage according to the following table:
<table>
<tr><th>Bit 13</th><th>TX/$\overline{RX}$</th><th>Characteristic</th></tr>
<tr><td>0</td><td>0</td><td>65Hz High Pass DC Blocking Filter</td></tr>
<tr><td>0</td><td>1</td><td>2kHz Low Pass Smoothing Filter</td></tr>
<tr><td>1</td><td>0</td><td>2kHz Low Pass Smoothing Filter</td></tr>
<tr><td>1</td><td>1</td><td>65Hz High Pass DC Blocking Filter</td></tr>
</table>
The nominal gain of this 2nd subaudio filter stage is 0dB for HPF mode and –18dB for LPF mode. See Bit 7 description for setting Low Pass Filter 2 gain to 0dB. This bit should be a logic ‘0’ for normal operation.</td></tr>
</table>

Bit(s)	Description
TX SUBAUDIO LEVEL **Bit 12-8**	

Bit 12	Bit 11	Bit 10	Bit 9	Bit 8	Subaudio Gain
0	0	0	0	0	Off
0	0	0	0	1	-7.5dB
0	0	0	1	0	-7.0dB
0	0	0	1	1	-6.5dB
0	0	1	0	0	-6.0dB
0	0	1	0	1	-5.5dB
0	0	1	1	0	-5.0dB
0	0	1	1	1	-4.5dB
0	1	0	0	0	-4.0dB
0	1	0	0	1	-3.5dB
0	1	0	1	0	-3.0dB
0	1	0	1	1	-2.5dB
0	1	1	0	0	-2.0dB
0	1	1	0	1	-1.5dB
0	1	1	1	0	-1.0dB
0	1	1	1	1	-0.5dB
1	0	0	0	0	0.0dB
1	0	0	0	1	0.5dB
1	0	0	1	0	1.0dB
1	0	0	1	1	1.5dB
1	0	1	0	0	2.0dB
1	0	1	0	1	2.5dB
1	0	1	1	0	3.0dB
1	0	1	1	1	3.5dB
1	1	0	0	0	4.0dB
1	1	0	0	1	4.5dB
1	1	0	1	0	5.0dB
1	1	0	1	1	5.5dB
1	1	1	0	0	6.0dB
1	1	1	0	1	6.5dB
1	1	1	1	0	7.0dB
1	1	1	1	1	7.5dB

SUBAUDIO LOW PASS FILTER 2 GAIN **Bit 7**	Setting to a logic ‘1’ forces 2nd subaudio filter stage to have 0dB gain in LPF mode, resulting in a Gain boost of 18dB over the normal setting. Used in conjunction with bit 13 this can allow an RX signal path with pass band response down to DC with a nominal overall pass band gain of 22dB. In normal operation, this bit should be a logic ‘0’.
SUBAUDIO FILTER OUTPUT ENABLE **Bit 6**	This bit can be used to expose the Subaudio filter output through the MOD block in RX mode. Normally the Subaudio filter output is only connected to the MOD block in TX mode. Setting this bit to a logic ‘1’ connects the filter output to the MOD block in both TX and RX modes. In normal operation, this bit should be a logic ‘0’.
DC RESTORATION **Bit 5**	Set this bit to a logic ‘1’ to enable external DC restore mode. In external DC restore mode, an external capacitor to ground at the AUX I/O pin is required to compensate for internal filter offsets. In normal operation, this bit should be a logic ‘0’.

Bit(s)	Description
RX SUBAUDIO LEVEL **Bit 4-0**	These bits control the subaudio digitally controlled trimmer amplifier gain over the range +/-7.5dB in 0.5dB steps if the TX/$\overline{RX}$ bit of the SETUP Register (D7 of $80) is a logic '0'.

Bit 4	Bit 3	Bit 2	Bit 1	Bit 0	Subaudio Gain
0	0	0	0	0	Off
0	0	0	0	1	-7.5dB
0	0	0	1	0	-7.0dB
0	0	0	1	1	-6.5dB
0	0	1	0	0	-6.0dB
0	0	1	0	1	-5.5dB
0	0	1	1	0	-5.0dB
0	0	1	1	1	-4.5dB
0	1	0	0	0	-4.0dB
0	1	0	0	1	-3.5dB
0	1	0	1	0	-3.0dB
0	1	0	1	1	-2.5dB
0	1	1	0	0	-2.0dB
0	1	1	0	1	-1.5dB
0	1	1	1	0	-1.0dB
0	1	1	1	1	-0.5dB
1	0	0	0	0	0.0dB
1	0	0	0	1	0.5dB
1	0	0	1	0	1.0dB
1	0	0	1	1	1.5dB
1	0	1	0	0	2.0dB
1	0	1	0	1	2.5dB
1	0	1	1	0	3.0dB
1	0	1	1	1	3.5dB
1	1	0	0	0	4.0dB
1	1	0	0	1	4.5dB
1	1	0	1	0	5.0dB
1	1	0	1	1	5.5dB
1	1	1	0	0	6.0dB
1	1	1	0	1	6.5dB
1	1	1	1	0	7.0dB
1	1	1	1	1	7.5dB

Table 22: SUBAUDIO ANALOG CONTROL Register ($97)

6 Application Notes

6.1 Overview

The purpose of this section is to describe the CMX838 from an application perspective to shorten the time to successfully develop CMX838-based designs. Because the CMX838 integrates so many functions of an FRS/PMR446/GMRS (hereinafter referred to collectively as FRS) radio, an approach is taken to examine a radio design from a top level down with an emphasis on CMX838 functions. Functions outside the CMX838, e.g. RF functions, are beyond the scope of this data bulletin and so are presented only in conceptual form for illustrative purposes.

6.2 Basic FRS Radio Architecture

An FRS radio transmits a baseband voice signal using RF FM modulation in the UHF band. A form of selective calling is highly desirable in FRS applications to help coordinate the use of the available RF channels. The most popular technique divides the available audio spectrum into two frequency bands, audio and subaudio, to allow simultaneous transmission of voice in the audio band and a control signal in the subaudio band.

A transmitting radio combines audio voice and subaudio tone signals into a composite signal and FM modulates it into RF with properly adjusted frequency deviation and bandwidths. A receiving radio demodulates the RF signal to recover the baseband composite signal and decodes the embedded subaudio tone to control the loudspeaker signal path. This technique is used to enable loudspeaker operation only when the appropriate subaudio control signal is received with voice. An acronym for this technique is CTCSS – continuous tone controlled selective squelch.

The advanced tone processing functions of the CMX838 support the use of subaudio tones to selectively call different groups of receivers. For example, a group call feature would allow selective calling of ‘parents,’ ‘children’ and ‘entire family’ groups to better coordinate radio use.

FRS radios usually support multiple RF channels via synthesized radio techniques to optimize cost and size.

Figure 23 and Figure 24 are conceptual diagrams that identify the audio processing, subaudio (encoder and decoder), modulation, baseband clock, and synthesizer functions described above. Note that because FRS radios are half duplex, several of the functions shown serve both TX and RX modes of operation.

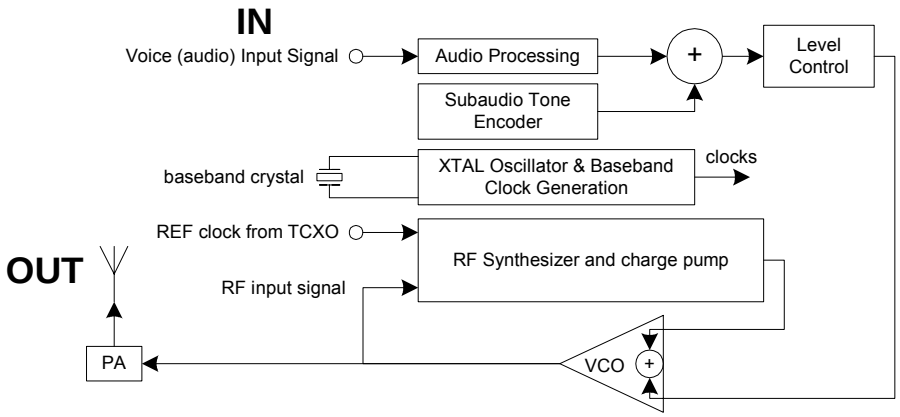

Figure 23: Basic FRS Radio Tx Architecture

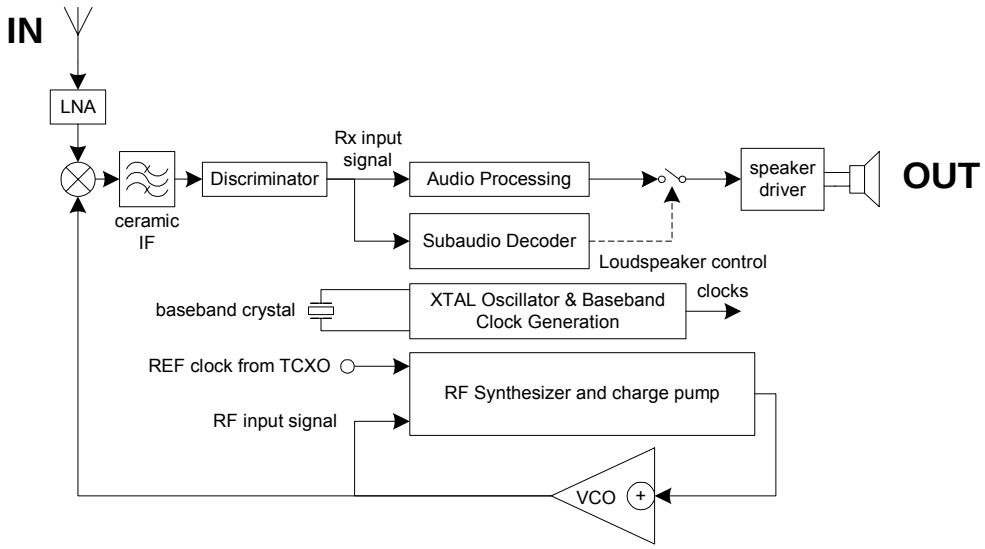

Figure 24: Basic FRS Radio Rx Architecture

6.3 CMX838 Architectural Overview

The CMX838 integrates all the audio processing, tone signaling processor, modulation, baseband clock and synthesizer functions described in Section 6.2, along with several other important functions to reduce cost, size and design time. Its main function blocks are identified below.

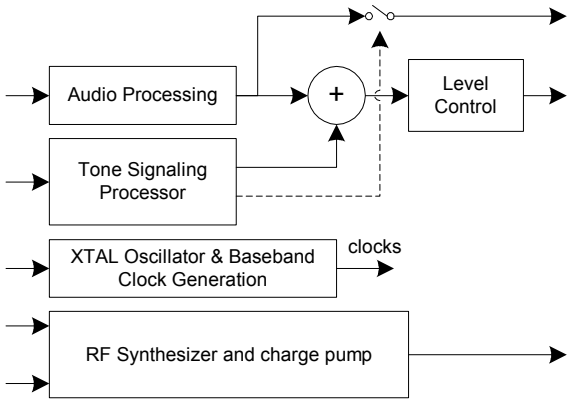

Figure 25: CMX838 Main Function Blocks

The Tone Signaling Processor includes many features that are not provided by typical subaudio tone processors.

6.4 Detailed CMX838 Architecture

A detailed diagram of the CMX838 is shown below with its five main sections identified. The C-BUS serial interface, not a main section, provides a convenient I/O port through which an external µC can access and control the CMX838's many functions using a minimum of signals and circuit board area.

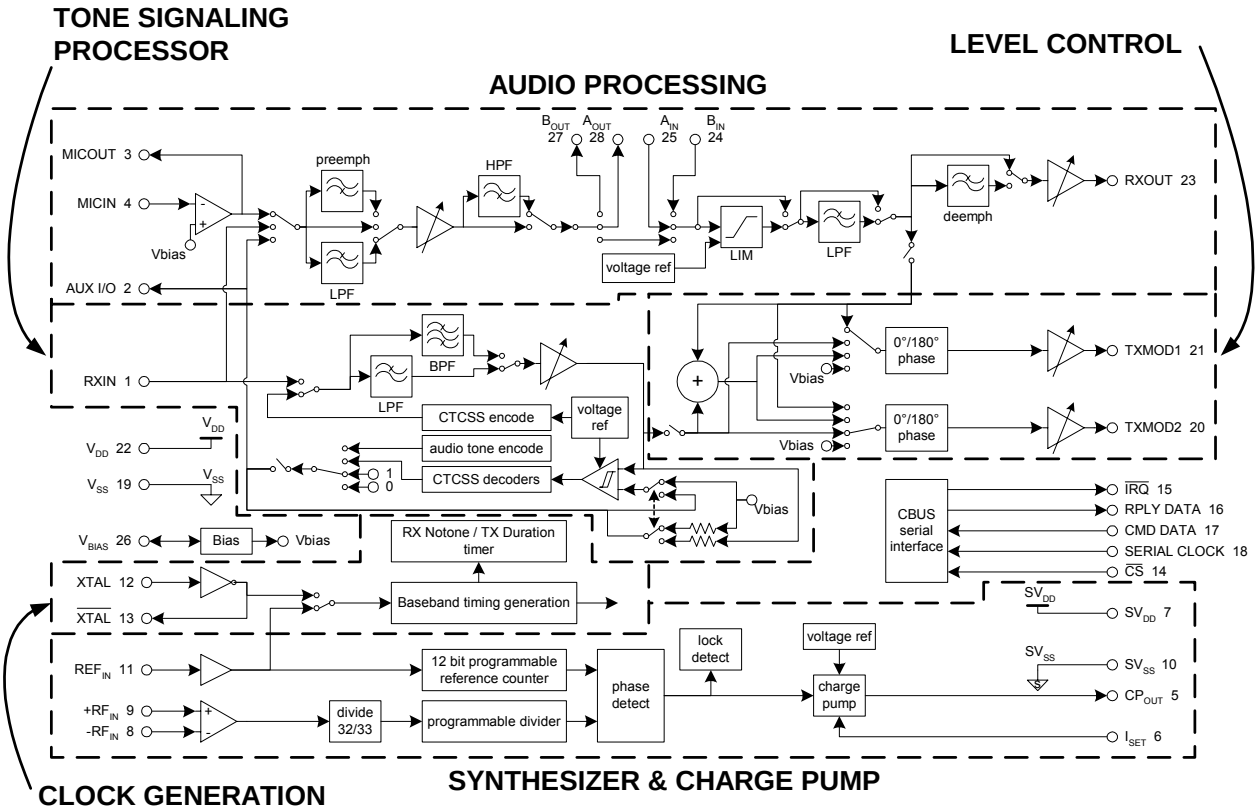

Figure 26: CMX838 Main Sections

6.4.1 Audio Processing

The Audio Processing section, shown in Figure 27, supports both TX and RX operating modes with various switch paths and enable/disable functions. The features support both end user features (e.g. digital loudspeaker speaker volume control and digital mic gain control) and manufacturing operations (e.g. peak deviation trim testing). Features include:

- High gain microphone input amplifier to directly support electret/condenser microphones
- Auxiliary audio input to accept signals from a second audio source e.g. an external tone generator or via an internal path from the CMX838's Tone Signaling Processor
- Microphone/auxiliary/discriminator source switch
- Pre-emphasis filter with enable/disable
- Digital microphone level control
- Audio filters to band limit audio signals and convert externally applied square tones to call tones
- Switch matrix to engage both 'forward' and 'reverse' external audio processing functions.
- Deviation limiter with integrated voltage reference regulates output level for constant audio RF deviation without requiring an external voltage regulator.
- Post deviation limiter filter
- TX output to Modulator section path enable switch
- De-emphasis filter with enable/disable
- RX output digital volume control

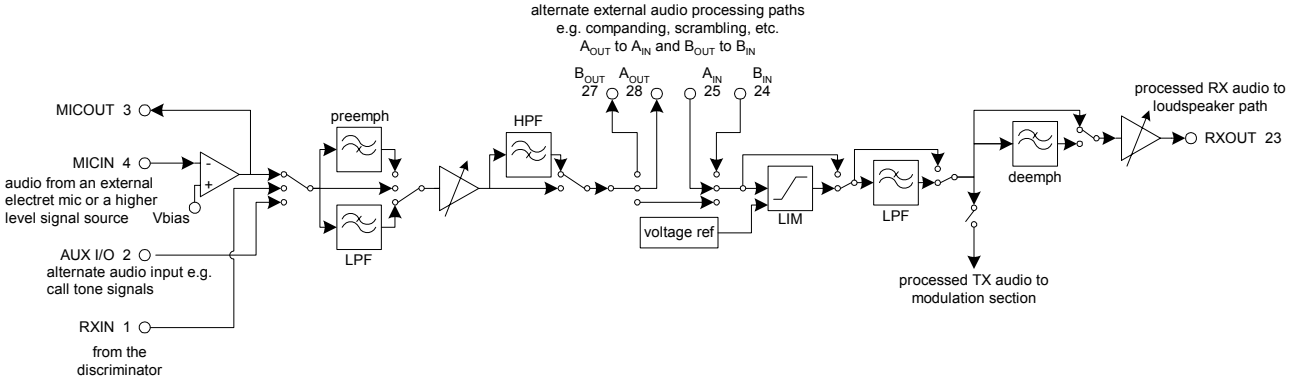

Figure 27: Audio Processing

Examples of ‘RX from discriminator’, ‘TX voice from microphone’ and ‘TX internally generated audio tone with loudspeaker enabled’ paths are illustrated in Figure 28, Figure 29, and Figure 30.

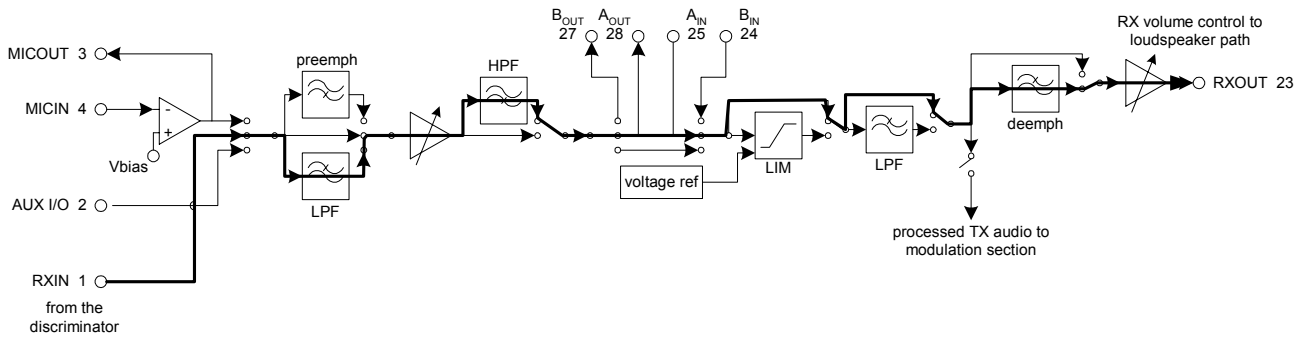

Figure 28: Example Audio RX Path

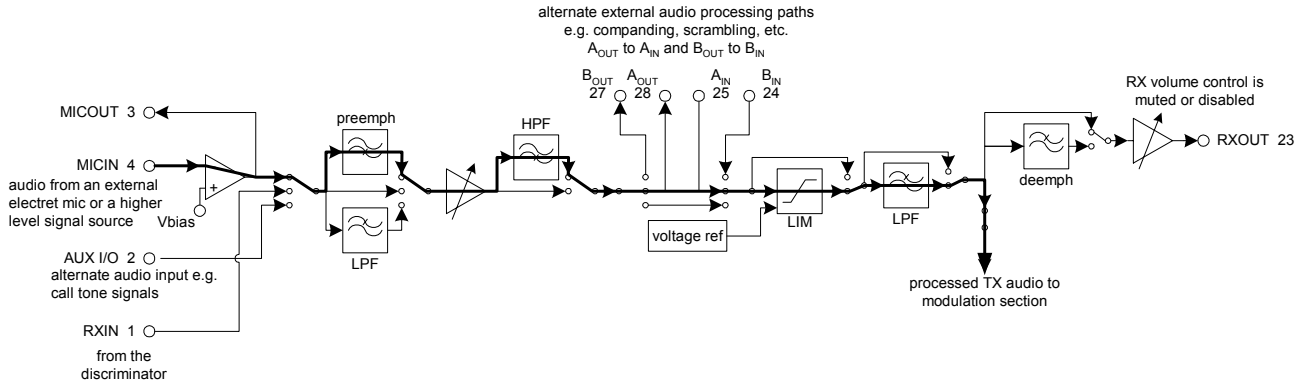

Figure 29: Example Audio TX Voice Path

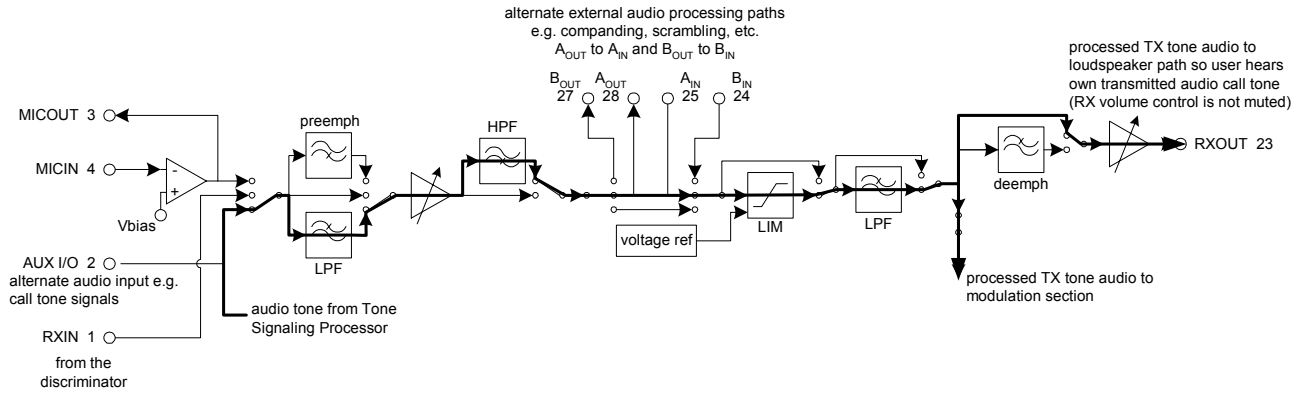

Figure 30: Example Audio TX Internally Generated Tone with Loudspeaker Enabled Path

6.4.2 Tone Signaling Processor

The Tone Signaling Processor, shown in Figure 31, provides a unique combination of features that outperforms traditional approaches. It supports traditional subaudio CTCSS tones with advanced, flexible, encode and decode functions to simplify radio designs and enable new FRS radio features. The tone signaling processor can also generate audio tones suitable for call alert signals to eliminate the need for an external tone generator, if desired. Internal signals are exposed via flexible switch paths to support user defined external circuits. Features include:

- 51 parallel CTCSS decoders can be individually enabled/disabled to perform 'flash' tone decoding on user activated tones in an internal tone 'watch list.' This architecture provides the performance to support rapid receive tone scanning, group calling and Tone Cloning™ (automatic CTCSS decoder configuration) end product functions without a decoder response time penalty. Note that one tone must be applied to the decoders at any given time, consistent with normal CTCSS practice.
- The CTCSS encoder/decoder contains a pre-programmed set of 50 tone definitions. Each tone is referenced by index for simple application program development. The 50 tone definitions include the entire TIA-603 standard tone set with other common frequencies added. A 51st User Programmable tone allows a user to configure an arbitrary tone frequency.
- Integrated voltage reference regulates CTCSS encoder output level for constant subaudio RF deviation without requiring an external voltage regulator.
- Digitally controlled subaudio output level to support various external radio modulation architectures.
- Complete CTCSS decoder status word provides a single Decoder Status bit to directly drive squelch control decisions in an external μC.
- User configurable CTCSS decoder Notone timer (to adjust CTCSS decoder dropout response), bandwidth (to adjust selectivity) and TX duration timer functions.
- High performance filters with selectable gain controls enhance end product radio sensitivity and support multiple design architectures e.g. both internal and external summing of subaudio and audio signals.
- Audio tone generator for call alert signals.
- Controllable switch paths and internal signal exposure to support user developed functions.

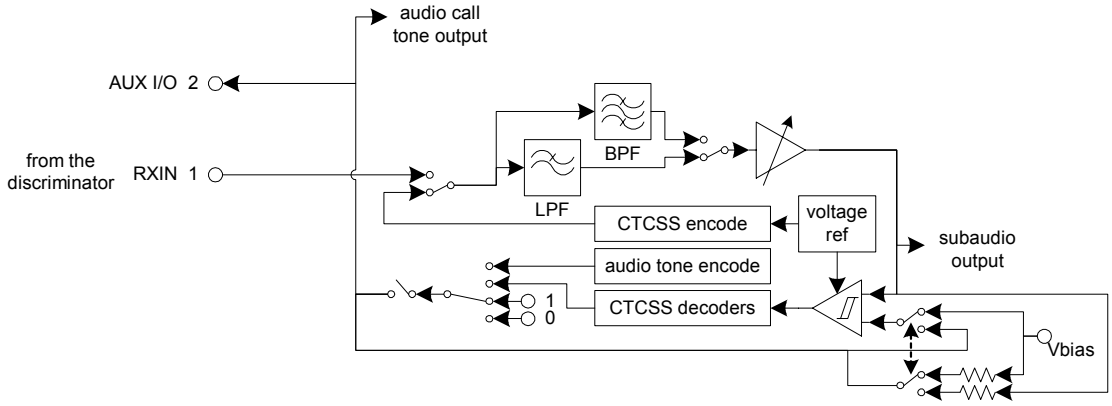

Figure 31: Tone Signaling Processor

Examples of ‘CTCSS tone decoder’, ‘CTCSS tone encoder’ and ‘internal audio encoder’ paths are illustrated in Figure 32, Figure 33, and Figure 34.

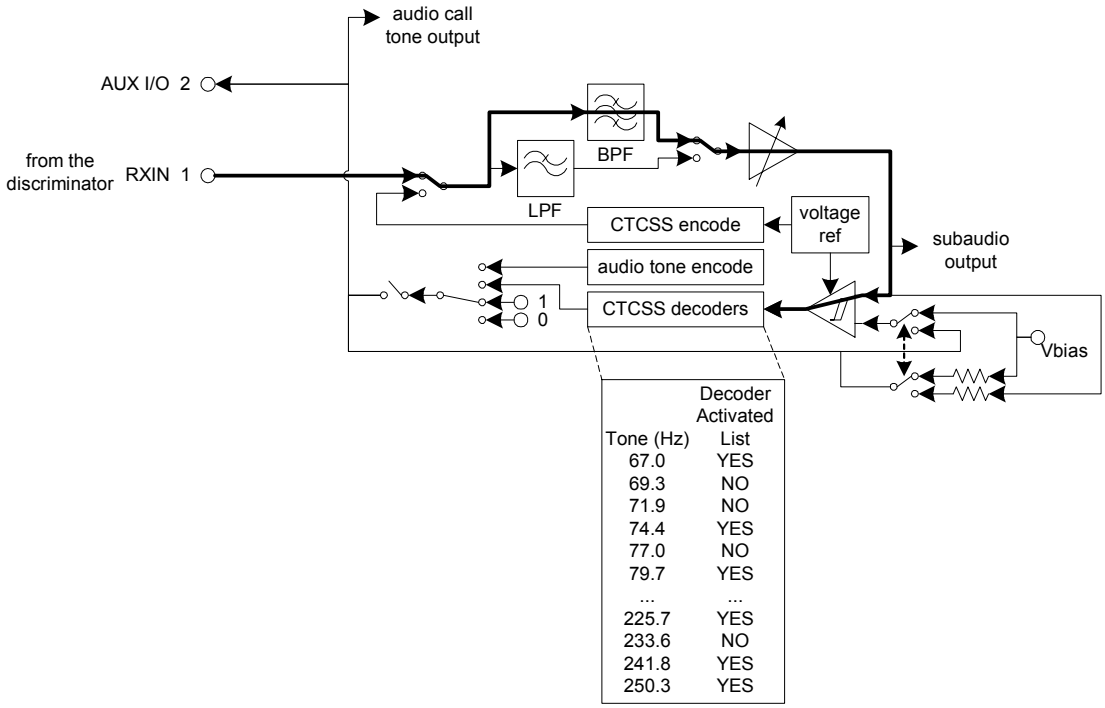

Figure 32: Example CTCSS Tone Decoder Path

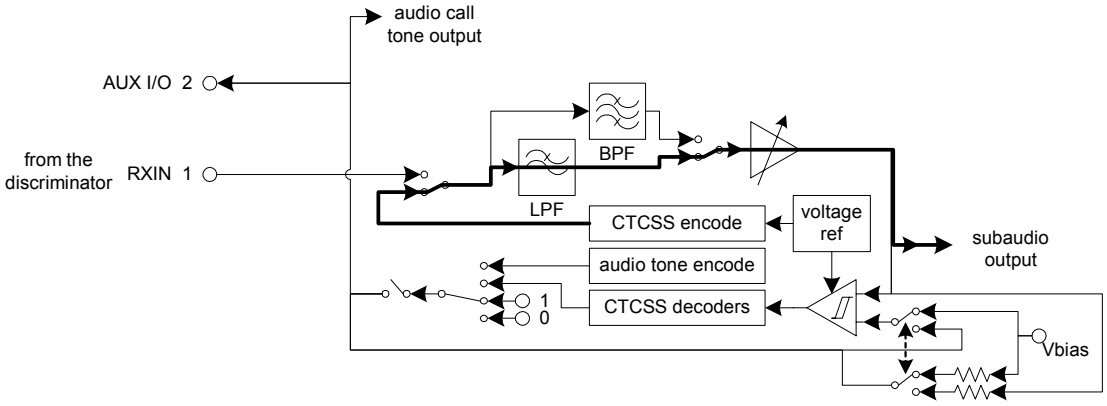

Figure 33: Example CTCSS Tone Encoder Path

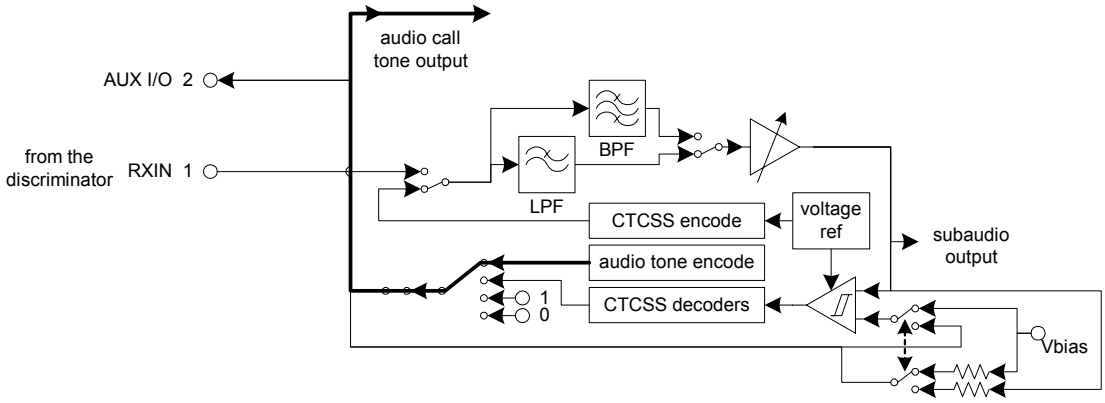

Figure 34: Example Internal Audio Tone Encoder Path

6.4.3 Level Control

The Level Control section, shown in Figure 35, combines TX audio and subaudio signals using a summer, selectable switch paths, digitally controlled gains, and 0°/180° phase selection to support a variety of radio TX architectures.

Synthesized radio transmitters can attenuate subaudio tone levels in a manner related to the subaudio tone frequency. This section, described below, supports several approaches to manage this aspect of designs based on synthesizers.

- Use an FM modulator having flat subaudio response. This modulator can be driven by the composite sum of audio and subaudio signals to perform 'single point modulation.'
- Apply audio signal to the synthesizer VCO input and subaudio signal to the synthesizer reference oscillator voltage control input. This modulator requires separate audio and subaudio output signals with their relative levels trimmed to perform 'two point modulation.' Some oscillators are reverse acting and so must have their driving signal inverted before it is applied. Applications requiring summed audio and subaudio to be applied to both the modulator and synthesizer reference oscillator are also supported.
- Use an FM modulator with attenuating subaudio response. This modulator must be driven by constant audio levels but subaudio frequency dependent subaudio levels. This driving signal is obtained by varying the subaudio tone level, according to subaudio tone frequency, and then summing it with the audio signal.

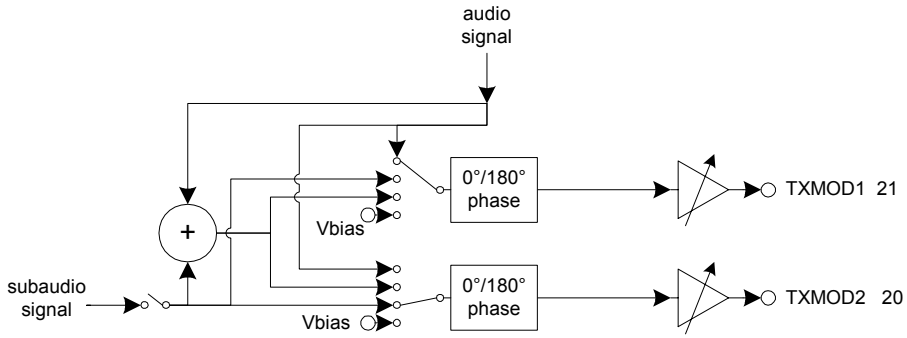

Figure 35: Level Control

Examples of ‘single point modulation level’, ‘two point modulation level’ and ‘single point modulation with varied subaudio level’ paths are illustrated in Figure 36, Figure 37, and Figure 38.

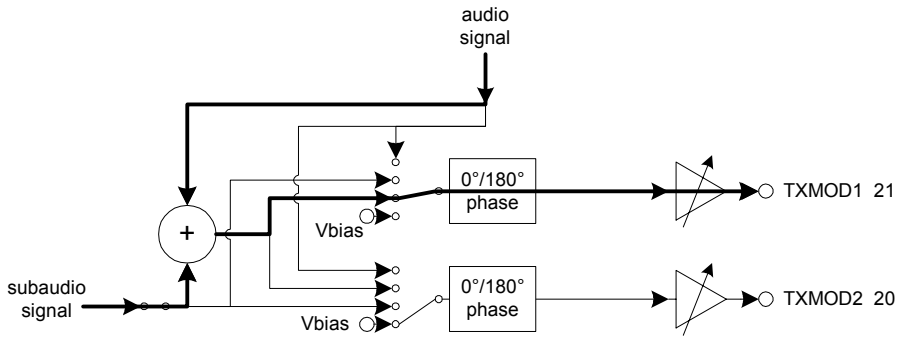

Figure 36: Example Single Point Modulation Level Path

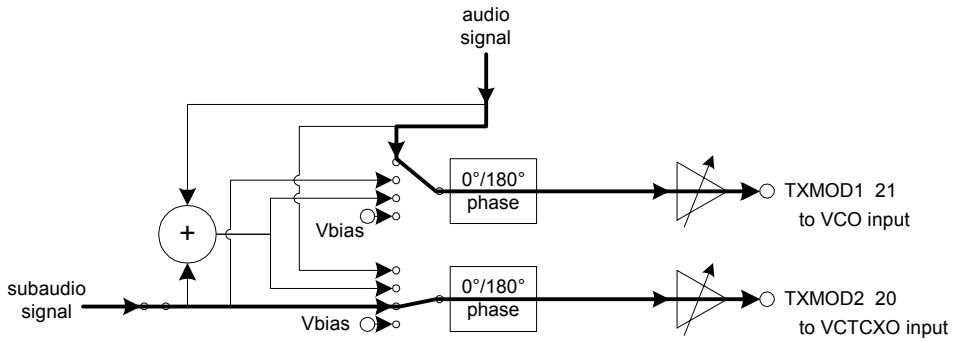

Figure 37: Example Two-Point Modulation Level Paths

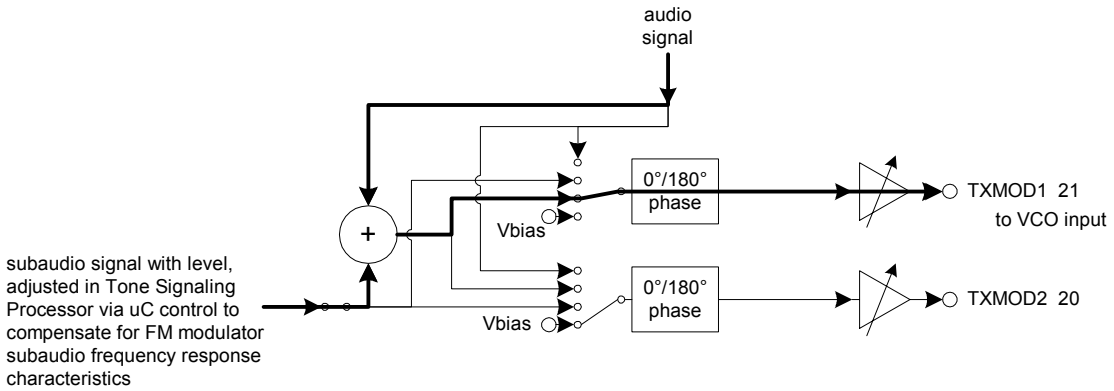

Figure 38: Example Single Point Modulation with Varied Subaudio Level Paths

6.4.4 Synthesizer and Charge Pump

The Synthesizer and Charge Pump section reduces component cost and size when compared with non-integrated alternatives. It also provides a simpler programming interface because it is focused on FRS applications. When combined with an external VCO and related circuits its features include:

- Pre-programmed support for FRS, PMR446 and GMRS RF standard frequencies via simple 'channel select' commands.
- Lock detect function with IRQ indication, if enabled.
- Direct control of synthesizer values for more flexible operation, if desired.
- Support for several REF_{IN} reference clock frequencies.
- Charge pump programmed via a combination of a two state internal selection and an external charge current setting resistor.
- Charge pump polarity control via serial command.
- Integrated voltage reference provides constant charge pump current without requiring an external voltage regulator.

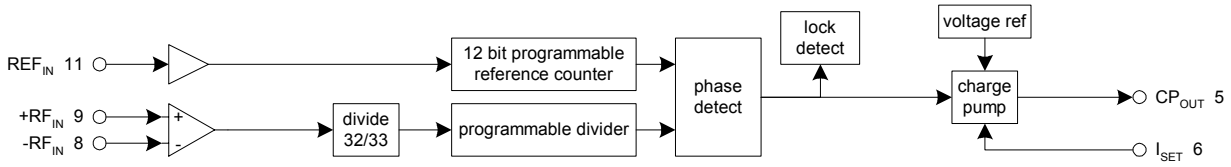

Figure 39: Synthesizer and Charge Pump

6.4.5 Clock Generation

The Clock Generation section develops internal clocks to operate the Audio Processing, Tone Signaling Processor and Level Control sections. The clock source can be externally supplied or internally developed from an external crystal (attached to pins 12 and 13) or from a REF_{IN} clock signal applied to the Synthesizer & Charge Pump. When the latter is used, the external crystal can be omitted to save cost and space. Several crystal and REF_{IN} clock frequencies are supported.

Clock generation also includes a timer that is used in both RX and TX modes. In RX mode it operates as a Notone timer to qualify when a received subaudio tone has been removed. In TX mode it serves to time a transmission's duration.

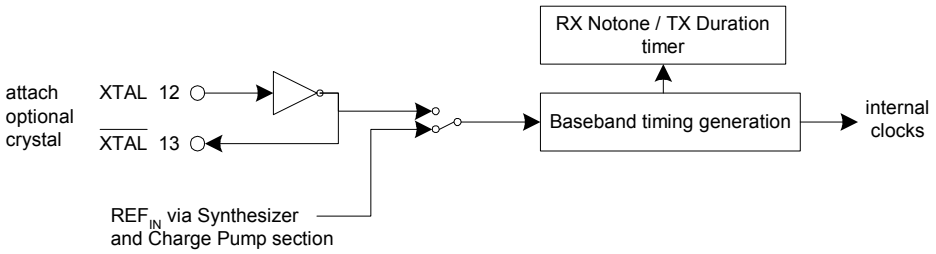

Figure 40: Clock Generation

6.4.6 Powersave Functions

Independent powersave control is provided for groups of CMX838 functions to support power management schemes. The scope of each powersave control is somewhat independent of the five functional sections of the CMX838 to support practical operating scenarios as shown in Figure 41 below.

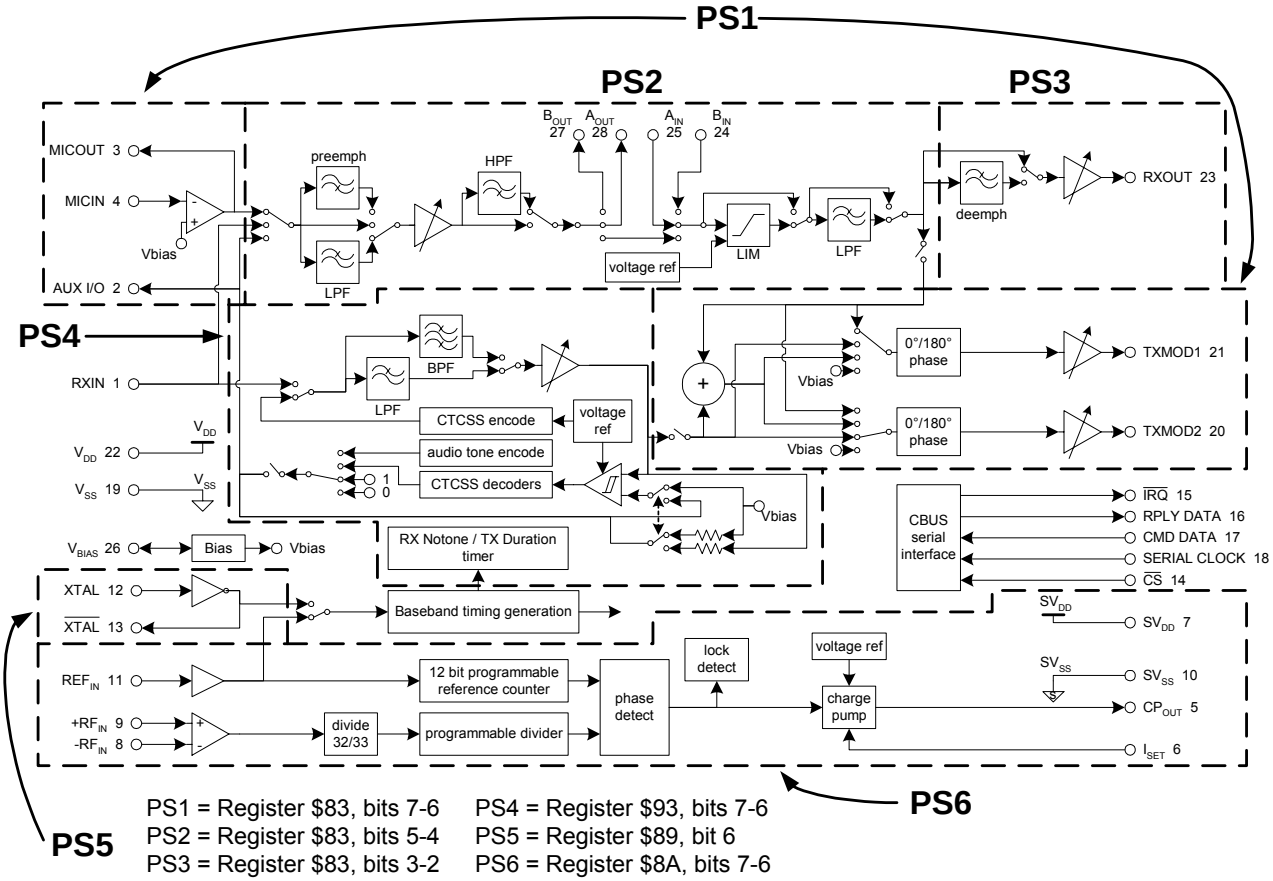

Figure 41: Powersave Scope and Related Control Registers

6.5 Control Registers Illustrated

This section illustrates the associations between some control register bit fields and corresponding CMX838 function blocks for quick reference. For detailed descriptions and definitions of C-BUS transactions and registers, see Section 5.1.

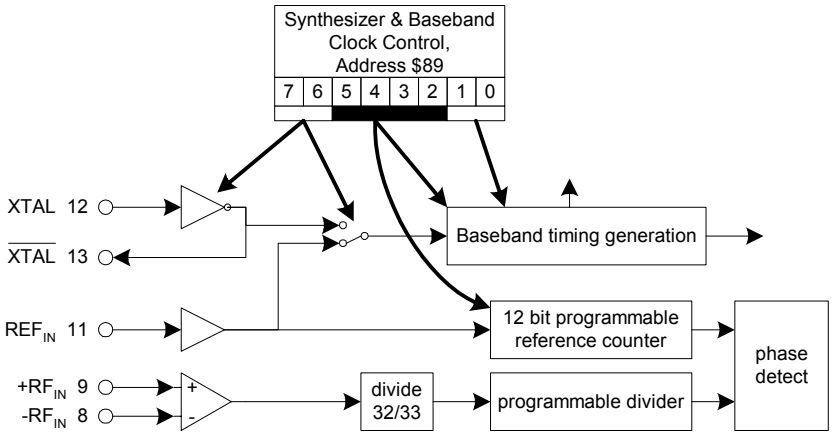

Figure 42: Synthesizer to Baseband Clock Control, $89

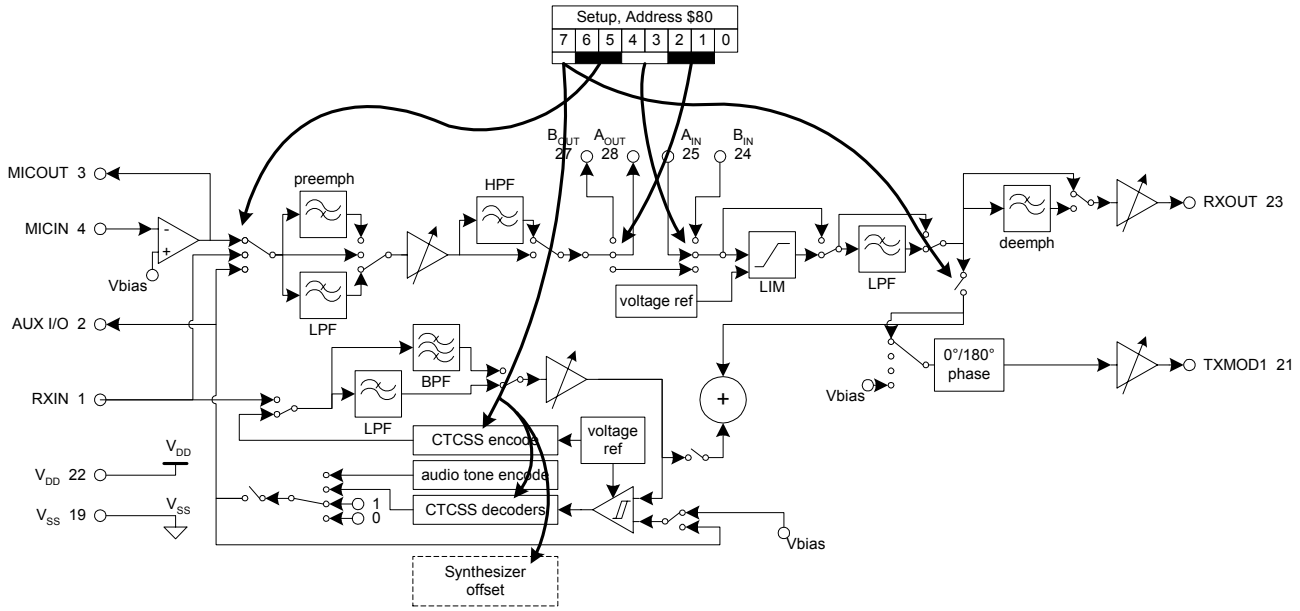

Figure 43: Setup, $80

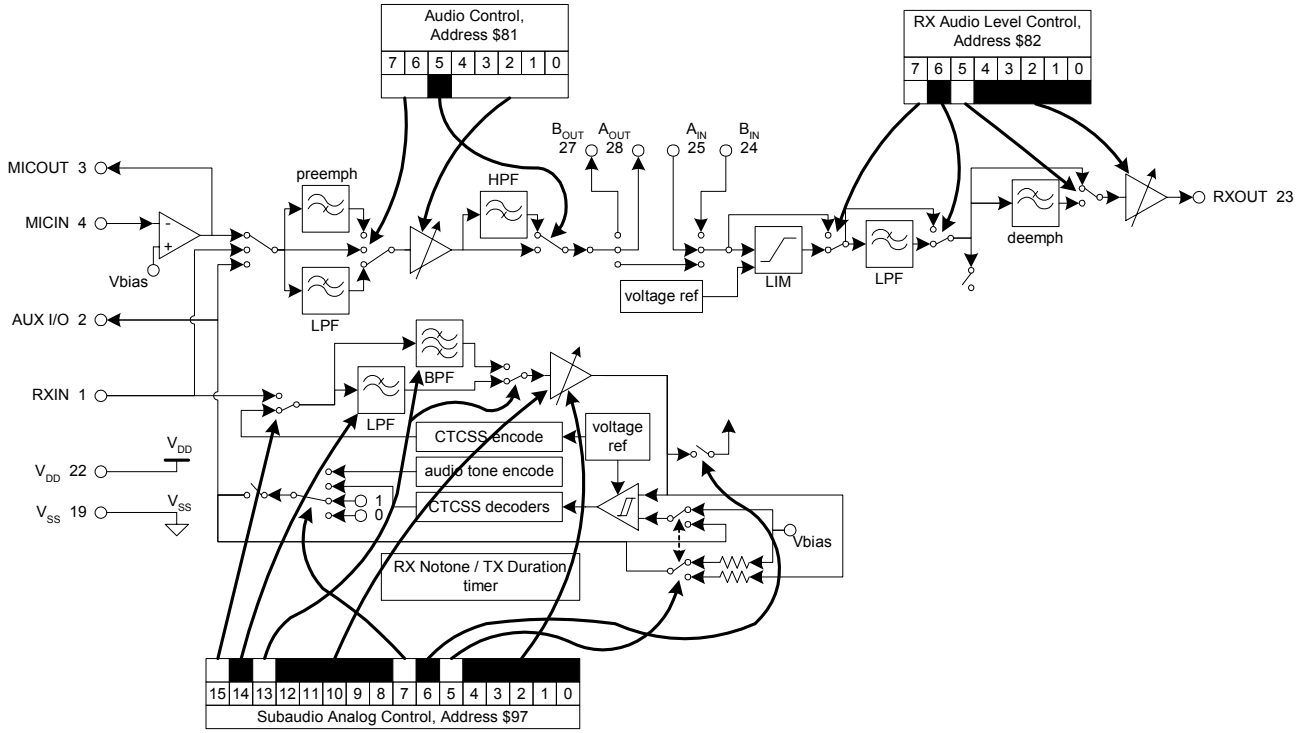

Figure 44: Audio ($81), RX Audio Level ($82) and Subaudio Analog ($97) Control

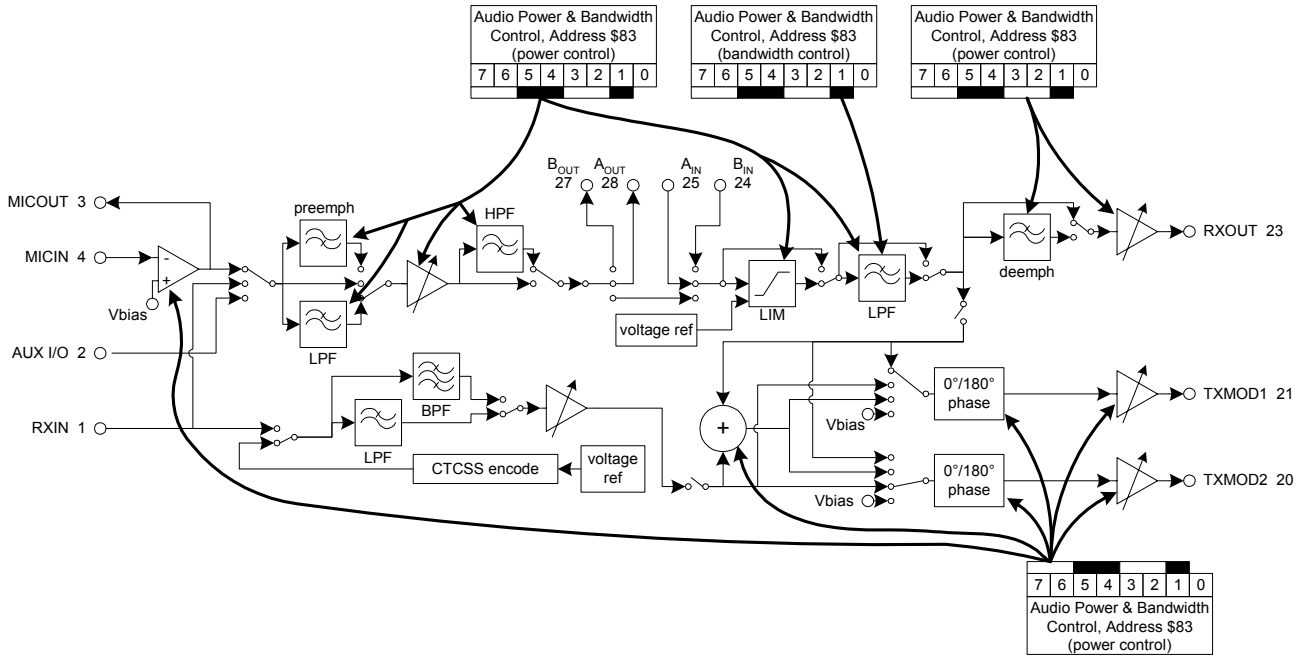

Figure 45: Audio Power and Bandwidth Control, $83

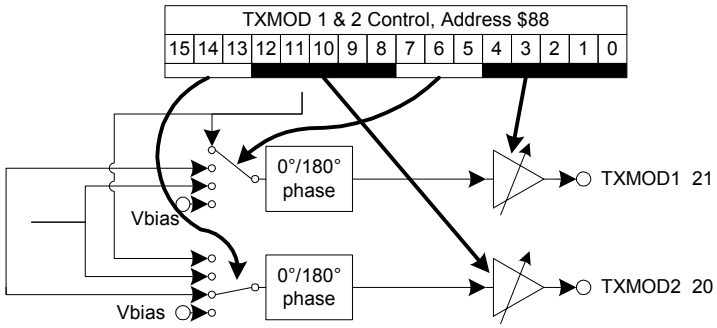

Figure 46: TXMOD1 & TXMOD2 Control, $88

6.6 Application Examples

This section includes application examples in the form of ordered C-BUS register lists. When listed, the register must be read or written to according to its defined type.

6.6.1 CMX838 Initialization

The CMX838's many sections and functions must be initialized in proper sequence before they can be operated. This example describes an initialization routine that may be used to configure the device for:

- Baseband clock generation from RF synthesizer clock
- Device digitally controlled amplifiers (DCA) set to normal power operation
- Filters and deviation limiter set for normal power consumption
- Synthesizer enabled and set to FRS channels
- Subaudio section memory cleared and ready for configuration data

6.6.1.1 Register Descriptions:

GENERAL RESET ($01)

SYNTHESIZER BASEBAND CLOCK CONTROL ($89): 10010000b = $90

- baseband and synthesizer reference clock from REF IN, xtal amp disabled (10)
- REF IN frequency 12.8MHz (0100)
- Bits 1-0 are don't cares as xtal is not used

AUDIO POWER AND BANDWIDTH CONTROL ($83): 01010100b = $54

- Modulation digitally controlled amplifiers (DCA) and microphone amplifier configured for normal operation (01)
- Audio filters, deviation limiter, and audio level DCA configured for normal operation (01)
- De-emphasis network and Rx Audio Out DCA configured for normal operation (01)
- Post deviation limiter LPF set to wide setting (0)
- Bit 0 is unused (0)

SYNTHESIZER GENERAL CONTROL ($8A): 01010100b = $54

- Synthesizer is enabled (01)
- Lock detect IRQ is enabled, status updated every phase comparison when the last two comparisons disagree (01)
- Magnitude of charge pump current is 40*Iset (0)
- Positive VCO gain slope (1)
- FRS channels selected (00)

TONE SIGNALING CONTROL ($93): 01001111b = $4F

- Enable power (01)
- No IRQ (00)
- Subaudio processor 'soft reset' (1111)

NOTE: Once the subaudio processor is in the 'soft reset' mode, any further tasks that are issued to the subaudio processor will cause it to enter the 'fast initialization' mode. In this mode, the tone detectors and encoders do not run. In order to resume normal operation from this 'fast initialization' mode, a task of $0 must be written to the TONE SIGNALING CONTROL register ($93).

6.6.2 TX, subaudio encoding, single point modulation

This TX scenario configures the CMX838 as shown in Figure 47, for:

- Baseband clock generation from RF synthesizer clock
- input from microphone
- internal pre-emphasis
- HPF used
- Limiter/LPF used
- De-emphasis bypassed (this configuration will not allow Tx tone to be heard at speaker)
- CTCSS encoder enabled
- Audio + subaudio tones summed and presented at TX MOD 1 (TX MOD 2 set to Vbias)

6.6.2.1 Register Descriptions:

GENERAL RESET ($01): (if required)

SYNTHESIZER BASEBAND CLOCK CONTROL ($89): 10010000b = $90

- baseband and synthesizer reference clock from REF IN, xtal amp disabled (10)
- REF IN frequency 12.8MHz (0100)
- Bits 1-0 are don't cares as xtal is not used

SETUP ($80): 11111110b = $FE

- Tx Enabled (1)
- Audio input supplied by microphone output (11)
- Audio signal passed through HPF to limiter (1111)
- Bit 0 is unused (0)

AUDIO CONTROL ($81): 00010000b = $10

- Audio signal passed through pre-emphasis filter and HPF (000)
- Audio level set to 0.0dB (10000)

RX AUDIO LEVEL CONTROL ($82): 00010111b = $17

- Deviation limiter not bypassed (0)
- Post deviation limiter LPF not bypassed (0)
- De-emphasis network not bypassed (0)
- Rx volume control set to 0.0dB (10111)

AUDIO POWER AND BANDWIDTH CONTROL ($83): 01010100b = $54

- Modulation digitally controlled amplifiers (DCA) and microphone amplifier configured for normal operation (01)
- Audio filters, deviation limiter, and audio level DCA configured for normal operation (01)
- De-emphasis network and Rx Audio Out DCA configured for normal operation (01)
- Post deviation limiter LPF set to wide setting (0)
- Bit 0 is unused (0)

TX MOD 1 & 2 CONTROL ($88): 00000000 01110000b = $0070

- Tx Mod 2 output set to Vbias (000)
- Tx Mod 2 output gain set to off (00000)
- Tx Mod 1 output set to Audio + Tone (011)
- Tx Mod 1 output gain set to 0.0dB (10000)

SYNTHESIZER GENERAL CONTROL ($8A): 01010100b = $54

- Synthesizer is enabled (01)
- Lock detect IRQ is enabled, status updated every phase comparison when the last two comparisons disagree (01)
- Magnitude of charge pump current is 40*Iset (0)
- Positive VCO gain slope (1)
- FRS channels selected (00)

SYNTHESIZER CHANNEL SELECT ($8B): 00000001b = $01

- Bits 7 and 6 set to zero (00)
- Lock detect comparison window set to +/- 20ns (00)
- FRS channel 1 selected (0001)

TONE SIGNALING CONTROL REGISTER ($93): 01001111b = $4F

- Enable power (01)
- No IRQ (00)
- Subaudio processor 'soft reset' (1111)

8 BIT SUBAUDIO TASK DATA ($95): 00010000b = $10

- Load 110.9Hz tone (00010000)

TONE SIGNALING CONTROL REGISTER ($93): 01001000b = $48

- Enable power for subaudio section (01)
- No IRQ (00)
- Load ‘select subaudio tone from preprogrammed list’ task (1000)

TONE SIGNALING CONTROL REGISTER ($93): 01000000b = $40

- Enable power for subaudio section (01)
- No IRQ (00)
- Load ‘normal operation’ task (0000)

SUBAUDIO ANALOG CONTROL ($97): 00010000 00010000b = $1010

- Subaudio encoder output passed to subaudio filter input (0)
- Subaudio LPF gain set to 0dB (default for Tx mode) (0)
- Subaudio LPF configured as 2kHz smoothing filter (0)
- Tx subaudio level set to 0.0dB (10000)
- Tx subaudio filter gain counter set to 0 for normal operation (0)
- Subaudio filter configuration set to 0 for normal operation (0)
- DC restoration set to 0 for normal operation (0)
- Rx subaudio level set to 0.0dB (10000)

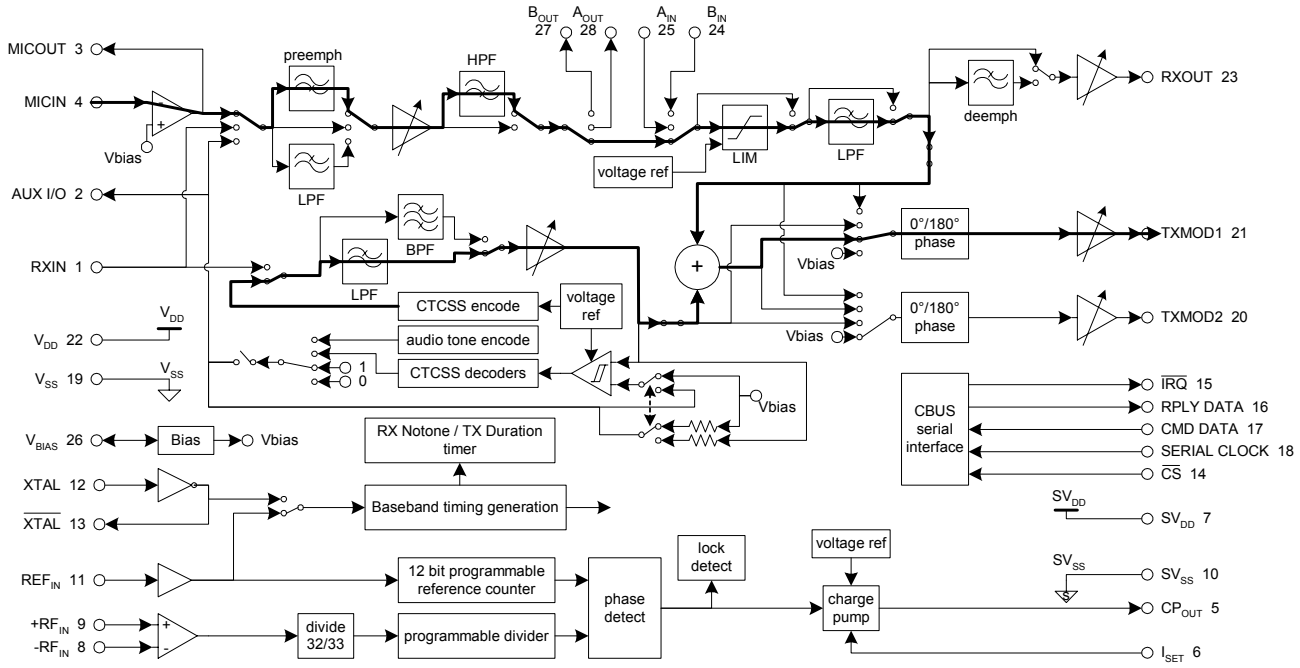

Figure 47: Application Example TX, Subaudio Encoding, Single Point Modulation

6.6.3 RX, subaudio decode CTCSS tone or tones

This RX scenario configures the CMX838 for:

- Baseband clock generation from RF synthesizer clock
- Rx Enabled
- Input from Rx In pin
- Signal passed through LPF, HPF, and de-emphasis in audio path (limiter bypassed)
- CTCSS decoder enabled with a tone ‘watch list’ configured, if desired

6.6.3.1 Register Descriptions:

GENERAL RESET ($01): (if required)

SYNTHESIZER BASEBAND CLOCK CONTROL ($89): 10010000b = $90

- baseband and synthesizer reference clock from REF IN, xtal amp disabled (10)
- REF IN frequency 12.8MHz (0100)
- Bits 1-0 are don't cares as xtal is not used

SETUP ($80): 00111110b = $3E

- Rx Enabled (0)
- Audio input signal supplied from RX Input (01)
- Audio signal passed through HPF out to limiter (1111)
- Bit 0 is unused (0)

AUDIO CONTROL ($81): 01010000b = $50

- First stage filtering configured as LPF (01)
- Audio signal passed through HPF (0)
- Audio level set to 0.0dB (10000)

RX AUDIO LEVEL CONTROL ($82): 11010111b = $D7

- Deviation limiter bypassed (1)
- Post deviation limiter LPF bypassed (1)
- Audio signal passed through de-emphasis network (0)
- Rx volume control set to 0.0dB (10111)

AUDIO POWER AND BANDWIDTH CONTROL ($83): 01010100b = $54

- Modulation digitally controlled amplifiers (DCA) and microphone amplifier configured for normal operation (01)
- Audio filters, deviation limiter, and audio level DCA configured for normal operation (01)
- De-emphasis network and Rx Audio Out DCA configured for normal operation (01)
- Post-deviation limiter LPF set to wide setting (0)
- Bit 0 is unused (0)

TX MOD 1 & 2 CONTROL ($88): 00000000 00000000b = $0000

- Tx Mod 2 output set to Vbias (000)
- Tx Mod 2 output gain set to off (00000)
- Tx Mod 1 output set to Vbias (000)
- Tx Mod 1 output gain set to off (00000)

SYNTHESIZER GENERAL CONTROL ($8A): 01010100b = $54

- Synthesizer is enabled (01)
- Lock detect IRQ is enabled, status updated every phase comparison when the last two comparisons disagree (01)
- Magnitude of charge pump current is 40*Iset (0)
- Positive VCO gain slope (1)
- FRS channels selected (00)

SYNTHESIZER CHANNEL SELECT ($8B): 00000001b = $01

- Bits 7 and 6 set to zero (00)
- Lock detect comparison window set to +/- 20ns (00)
- FRS channel 1 selected (0001)

TONE SIGNALING CONTROL ($93): 01001111b = $4F

- Enable power (01)
- No IRQ (00)
- Subaudio processor 'soft reset' (1111)
    - this task is only required when the subaudio processor is enabled the first time after power up ('General Reset' alone does not require the 'soft reset' task to be issued)

8 BIT SUBAUDIO TASK DATA ($95): 10110010b = $B2

- Load hex value resulting from $80 logically ordered with $32 ('254.1Hz tone select')

  {10000000b | 00110010b} = 10110010b = $B2
- When in Rx mode and MSB of $95 is "1", the desired tone(s) is (are) loaded onto the 'tone watch list'
- When in Rx mode and MSB of $95 is "0", the desired tone(s) is (are) **removed** from the 'tone watch list'

TONE SIGNALING CONTROL ($93): 01010100b = $54

- Enable power for subaudio section (01)
- IRQ when detect status change (01)
- Load 'enable/disable tone detector' task (0100)

IF DESIRED, REPEAT TONE LOADING AND TONE DETECTOR ENABLING STEPS (immediately prior two steps) TO BUILD A 'TONE WATCH LIST.'

TONE SIGNALING CONTROL ($93): 01010000b = $50

- Enable power for subaudio section (01)
- IRQ when detect status change (01)
- Load 'normal operation' task (0000)

SUBAUDIO ANALOG CONTROL ($97): 00010000 00010000b = $1010

- Rx Input passed to subaudio filter input (0)
- Subaudio LPF gain set to +20dB (default for Rx mode) (0)
- Subaudio LPF configured as 65Hz high pass DC blocking filter (0)
- Tx subaudio level set to 0.0dB (10000)
- Tx subaudio filter gain counter set to 0 for normal operation (0)
- Subaudio filter configuration set to 0 for normal operation (0)
- DC restoration set to 0 for normal operation (0)
- Rx subaudio level set to 0.0dB (10000)

6.6.4 RX, multiple subaudio tone detect - Tone Cloning™

This RX scenario configures the CMX838 for:

- Baseband clock generation from RF synthesizer clock
- Rx Enabled
- Input from Rx In pin
- Signal passed through LPF, HPF, and de-emphasis in audio path (limiter bypassed)
- CTCSS decoder enabled, all TIA-603 standard tones selected for detection (recognition)

Tone Cloning™ is a function that allows one FRS radio to quickly identify and clone the CTCSS tone setting transmitted by another radio. For end users, Tone Cloning™ simplifies the setup and operation of FRS radios the CTCSS tone programming process on the radio's user interface.

After the CMX838's TIA-603 standard tone set tone decoders are activated in a tone 'watch list', the CMX838 then will promiscuously listen for any of those tones and identify it when it is received. The identity can then be used to efficiently set up the CMX838 CTCSS encoder to continue to use that tone.

6.6.4.1 Register Descriptions:

GENERAL RESET ($01): (if required)

SYNTHESIZER BASEBAND CLOCK CONTROL ($89): 10010000b = $90

- baseband and synthesizer reference clock from REF IN, xtal amp disabled (10)
- REF IN frequency 12.8MHz (0100)
- Bits 1-0 are don't cares as xtal is not used

SETUP ($80): 00111110b = $3E

- Rx Enabled (0)
- Audio input signal supplied from RX Input (01)
- Audio signal passed through HPF out to limiter (1111)
- Bit 0 is unused (0)

AUDIO CONTROL ($81): 01010000b = $50

- First stage filtering configured as LPF (01)
- Audio signal passed through HPF (0)
- Audio level set to 0.0dB (10000)

RX AUDIO LEVEL CONTROL ($82): 11010111b = $D7

- Deviation limiter bypassed (1)
- Post deviation limiter LPF bypassed (1)
- Audio signal passed through deemphasis network (0)
- Rx volume control set to 0.0dB (10111)

AUDIO POWER AND BANDWIDTH CONTROL ($83): 01010100b = $54

- Modulation digitally controlled amplifiers (DCA) and microphone amplifier configured for normal operation (01)
- Audio filters, deviation limiter, and audio level DCA configured for normal operation (01)
- De-emphasis network and Rx Audio Out DCA configured for normal operation (01)
- Post deviation limiter LPF set to wide setting (0)
- Bit 0 is unused (0)

TX MOD 1 & 2 CONTROL ($88): 00000000 00000000b = $0000

- Tx Mod 2 output set to Vbias (000)
- Tx Mod 2 output gain set to off (00000)
- Tx Mod 1 output set to Vbias (000)
- Tx Mod 1 output gain set to off (00000)

SYNTHESIZER GENERAL CONTROL ($8A): 01010100b = $54

- Synthesizer is enabled (01)
- Lock detect IRQ is enabled, status updated every phase comparison when the last two comparisons disagree (01)
- Magnitude of charge pump current is 40*Iset (0)
- Positive VCO gain slope (1)
- FRS channels selected (00)

SYNTHESIZER CHANNEL SELECT ($8B): 00000001b = $01

- Bits 7 and 6 set to zero (00)
- Lock detect comparison window set to +/- 20ns (00)
- FRS channel 1 selected (0001)

TONE SIGNALING CONTROL ($93): 01001111b = $4F

- Enable power (01)
- No IRQ (00)
- Subaudio processor ‘soft reset’ (1111)

  this task is only required when the subaudio processor is enabled the first time after power up (‘General Reset’ alone does not require the ‘soft reset’ task to be issued)

8 BIT SUBAUDIO TASK DATA ($95): 10111111b = $BF

- Load hex value resulting from $80 logically ordered with $3F (‘all TIA-603 tones select’)
  - {10000000b | 00111110b} = 10111111b = $BF
- When in Rx mode and MSB of $95 is “1”, the desired tone(s) is (are) **loaded** onto the ‘tone watch list’
- When in Rx mode and MSB of $95 is “0”, the desired tone(s) is (are) **removed** from the ‘tone watch list’

TONE SIGNALING CONTROL ($93): 01010100b = $54

- Enable power for subaudio section (01)
- IRQ when detect status change (01)
- Load ‘enable/disable tone detector’ task (0100)

TONE SIGNALING CONTROL ($93): 01010000b = $50

- Enable power for subaudio section (01)
- IRQ when detect status change (01)
- Load 'enable/disable tone detector' task (0000)

SUBAUDIO ANALOG CONTROL ($97): 00010000 00010000b = $1010

- Rx Input passed to subaudio filter input (0)
- Subaudio LPF gain set to +20dB (default for Rx mode) (0)
- Subaudio LPF configured as 65Hz high pass DC blocking filter (0)
- Tx subaudio level set to 0.0dB (10000)
- Tx subaudio filter gain counter set to 0 for normal operation (0)
- Subaudio filter configuration set to 0 for normal operation (0)
- DC restoration set to 0 for normal operation (0)
- Rx subaudio level set to 0.0dB (10000)

7 Performance Specification

7.1 Electrical Performance

7.1.1 Absolute Maximum Ratings

Exceeding these maximum ratings can result in damage to the device.

	Min.	Max.	Units
Supply (V_{DD} - V_{SS})	-0.3	7.0	V
Voltage on any pin to V_{SS}	-0.3	V_{DD} + 0.3	V
Current			
V_{DD}	-30	+30	mA
V_{SS}	-30	+30	mA
Any other pin	-20	+20	mA
E1 Package			
Total Allowable Power Dissipation at T_{AMB} = 25°C		400	mW
Derating above 25°C		5.3	mW/°C above 25°C
Storage Temperature	-55	+125	°C
Operating Temperature	-40	+85	°C
D1 Package			
Total Allowable Power Dissipation at T_{AMB} = 25°C		550	mW
Derating above 25°C		9	mW/°C above 25°C
Storage Temperature	-55	+125	°C
Operating Temperature	-40	+85	°C

7.1.2 Operating Limits

Correct operation of the device outside these limits is not implied.

	Notes	Min.	Max.	Units
Supply (V_{DD} - V_{SS})		2.7	5.5	V
Operating Temperature		-40	+85	°C

7.1.3 Operating Characteristics

Details in this section represent design target values and are not currently guaranteed.

For the following conditions unless otherwise specified:

Audio Level 0dB ref. = 400mV$_{RMS}$ at 1kHz
V_{DD} = 3.0V to 5.5V, T_{AMB}= -40°C to 85°C
Composite Signal = 400mV$_{RMS}$ at 1kHz + 100mV$_{RMS}$ Noise + 40mV$_{RMS}$ Subaudio Signal
Noise Bandwidth = 5kHz Band Limited Gaussian

	Notes	Min.	Typ.	Max.	Units
DC Parameters					
I_{DD}	1, 2				
All Powersaved			0.2	0.3	mA
Rx Operating					
CTCSS +Audio + Synthesizer			11	15.1	mA
CTCSS +Audio			2	2.4	mA
Tx Operating					
CTCSS +Audio + Synthesizer			11.3	15.4	mA
CTCSS +Audio			2.3	2.7	mA
C-BUS Interface					
Input Logic "1"		70%			V_{DD}
Input Logic "0"				30%	V_{DD}
Input Leakage Current Logic "1" or "0"		-1.0		1.0	µA
Input Capacitance				7.5	pF
Output Logic "1" I_{OH} = 120µA		90%			V_{DD}
Output Logic "0" I_{OL} = 360µA				10%	V_{DD}
"Off" State Leakage Current V_{OUT} = V_{DD}	3			10	µA
Analog Voltages					
DC Voltage at Analog pins			50%		V_{DD}
DC voltage at ISET pin			1.26		V
Variation of DC voltage at ISET pin			<10%		
AC Parameters					
TONE Decoder					
Sensitivity (Pure Tone)	4, 11		15		mV$_{RMS}$
CTCSS					
Composite Signal					
Response Time			160		ms
De-response Time			160		ms
Frequency Range		65		255	Hz
CTCSS Encoder					
Frequency Range		65		255	Hz
Tone Frequency Resolution			0.3		%
Tone Amplitude	4, 11		30		mV$_{RMS}$
Tone Amplitude Tolerance	10	-1.0	0	1.0	dB
Total Harmonic Distortion	5		2.0		%

	Notes	Min.	Typ.	Max.	Units
Audio Filters	6				
High Pass					
Cut-off frequency (-3dB)		300			Hz
Passband Gain (at 1.0kHz)			0		dB
Passband Ripple with respect to gain at 1.0kHz		-3		+0.5	dB
Stopband Attenuation (250Hz)		33.0			dB
Residual Hum and Noise			-50.0		dBp
Alias Frequency			50		kHz
Input Low-pass					
Cut-off frequency (-3dB)			4500		Hz
Passband Gain (at 1.0kHz)			0		dB
Passband Ripple with respect to gain at 1.0kHz		-3		+0.5	dB
Stopband Attenuation (15kHz)			-20		dB
Residual Hum and Noise			-50.0		dBp
Alias Frequency			50		kHz
Deviation Limiter					
Peak to peak voltage limit		1.87	2.1	2.36	V_{P-P}
Variation	10		<0.5		dB
Post-Deviation Limiter Low-pass					
Cut-off frequency (-3dB)					
Narrowband			3000		Hz
Wideband			3500		Hz
Passband Gain (at 1.0kHz)			0		dB
Passband Ripple with respect to gain at 1.0kHz		-3		+0.5	dB
Stopband Attenuation					
Narrowband (10kHz)			-40		dB
Wideband (10kHz)			-35		dB
Residual Hum and Noise			-50.0		dBp
Alias Frequency			50		kHz
Pre-emphasis	7				
Passband (+6dB per octave)		300		3000	Hz
Gain at 1.0kHz			0		dB
Residual Hum and Noise			-50.0		dBp
Alias Frequency			50		kHz
De-emphasis	7				
Passband (-6dB per octave)		300		3000	Hz
Gain at 1.0kHz			0		dB
Residual Hum and Noise			-50.0		dBp
Alias Frequency			50		kHz

	Notes	Min.	Typ.	Max.	Units
External Processing Paths					
AIN, BIN - Input Impedance			100		kΩ
AOUT, BOUT – Output Impedance			2.0		kΩ
RXIN					
Input Impedance			100		kΩ
Auxiliary Input/Output (AUX I/O)					
Input Impedance – AUX output disabled			100		kΩ
Output Impedance – AUX output enabled			100		kΩ
Transmitter Modulator Drives					
Mod.1 Attenuator					
Attenuation at 0dB		-0.2	0	0.2	dB
Cumulative Attenuation Error with respect to attenuation at 0dB		-1.0		1.0	dB
Mod.2 Attenuator					
Attenuation at 0dB		-0.2	0	0.2	dB
Cumulative Attenuation Error with respect to attenuation at 0dB		-0.6		0.6	dB
Xtal/Clock Input					
Pulse Width ('High' or 'Low')	9	40.0			ns
Input Impedance (at 100Hz)		10.0			MΩ
Gain Input = $1mV_{RMS}$ at 100Hz		20.0			dB
Transmit Input Amplifier (microphone amplifier)					
Maximum capacitive load			100		pF
Unity Gain BW (unloaded)			5		MHz
Maximum closed loop gain			40		dB
Slew Rate			1		V/µs
Gain Control Amplifiers: MOD1, MOD2, RXOUT					
Enabled - Output Swing	8		2.7		V_{P-P}
Disabled - Output Impedance			100		kΩ
Maximum capacitive load			150		pF
Unity Gain BW (unloaded)			2.6		MHz
Slew Rate			2.1		V/µs
RF Synthesizer					
RF Input Sensitivity			-20		dBm
Minimum Internal Phase Comparison Frequency		6.25			kHz
RF Input Frequency		100		500	MHz
Maximum reference input frequency				25	MHz
Sinusoidal input voltage (mV_{RMS})		100		500	mV_{RMS}
Input impedance (real)			100		kΩ

Operating Characteristics Notes:

1. At V_{DD} = 3.0V and T_{AMB} = 25°C only. Currents change with V_{DD}.
2. Not including any current drawn from the device by external circuitry.
3. $\overline{IRQ}$ pin.
4. With input gain components set as recommended in Figure 2 and internal gains set to 0dB.
5. Measured at MOD 1 or MOD 2 output.
6. See Section 4.1.
7. Maximum internal signal gains are about 11dB for the pre-emphasis filter and 12dB for de-emphasis, thus to avoid supply rails and clipping, signals should be scaled appropriately. The +/-7.5dB audio level amplifier can be used to scale signals for best sound quality. Filter supply rails are approximately V_{DD}-0.3V. For example to minimize the de-emphasis filter distortion at V_{DD} = 3.0V keep signals below about $\frac{V_{DD}-0.3}{2\cdot\sqrt{2}\cdot 10^{\frac{dB_gain}{20}}}$ =240mV_{RMS} at its input
8. Resistive load of 10kΩ, at V_{DD} = 3.0V and T_{AMB} = 25°C.
9. Timing for an external input to the XTAL/CLOCK pin.
10. Variation over voltage, temperature, and frequency.
11. Level is independent of supply voltage.

7.1.4 Timing

C-BUS Timings (See Figure 48)		Notes	Min.	Typ.	Max.	Units
t_{CSE}	$\overline{CS}$-Enable to Clock-High time		100	-	-	ns
t_{CSH}	Last Clock-High to $\overline{CS}$-High time		100	-	-	ns
t_{LOZ}	Clock-Low to Reply Output enable time		0.0	-	-	ns
t_{HIZ}	$\overline{CS}$-High to Reply Output 3-state time		-	-	1.0	µs
t_{CSOFF}	$\overline{CS}$-High Time between transactions		1.0	-	-	µs
t_{NXT}	Inter-Byte Time		200	-	-	ns
t_{CK}	Clock-Cycle time		200	-	-	ns
t_{CH}	Serial Clock-High time		100	-	-	ns
t_{CL}	Serial Clock-Low time		100	-	-	ns
t_{CDS}	Command Data Set-Up time		75.0	-	-	ns
t_{CDH}	Command Data Hold time		25.0	-	-	ns
t_{RDS}	Reply Data Set-Up time		50.0	-	-	ns
t_{RDH}	Reply Data Hold time		0.0	-	-	ns

Maximum 30pF load on each C-BUS interface line.

Note: These timings are for the latest version of the C-BUS as embodied in the CMX838.

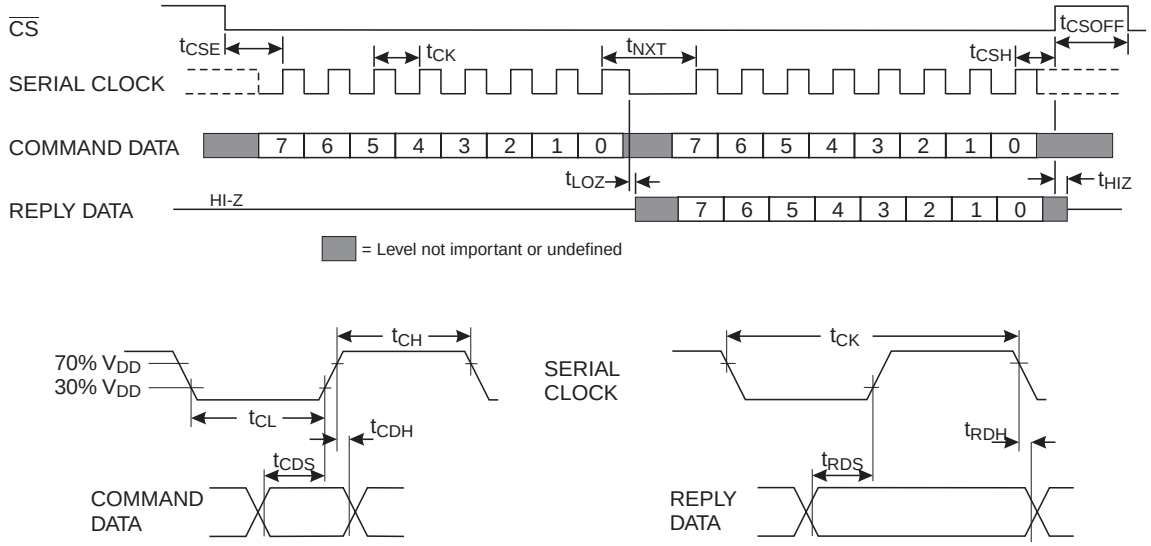

Figure 48: C-BUS Timing

7.2 Packaging

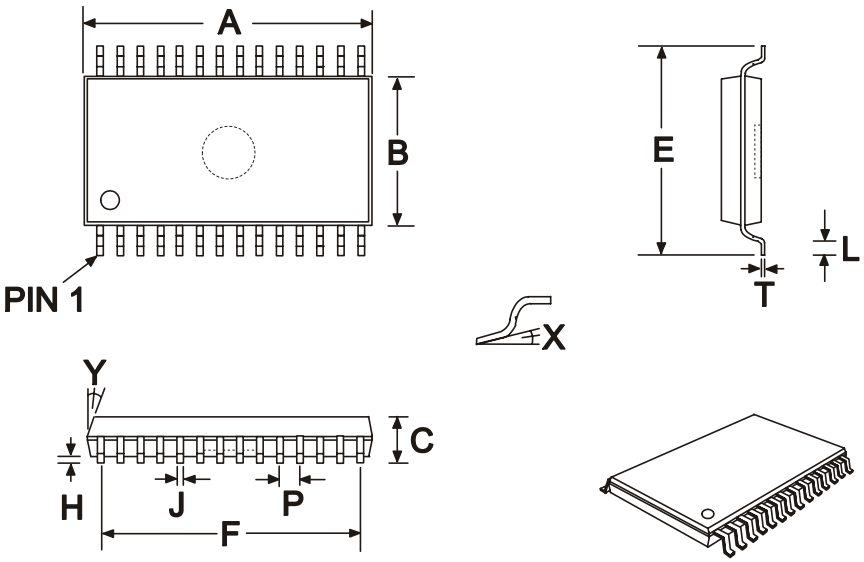

	DIM.	MIN.	TYP.	MAX.
*	A	9.60		9.80
*	B	4.30		4.50
	C	------		1.20
	E	6.30		6.50
	F		8.45	
	H	0.05		0.15
	J	0.17		0.30
	L	0.45		0.75
	P		0.65	
	T	0.08		0.20
	X	0°		8°
	Y		12°	

NOTE :

* A & B are reference data and do not include mold deflash or protrusions.

All dimensions in mm
Angles are in degrees

Figure 49: 28-pin TSSOP (E1) Mechanical Outline: *Order as part no. CMX838E1*

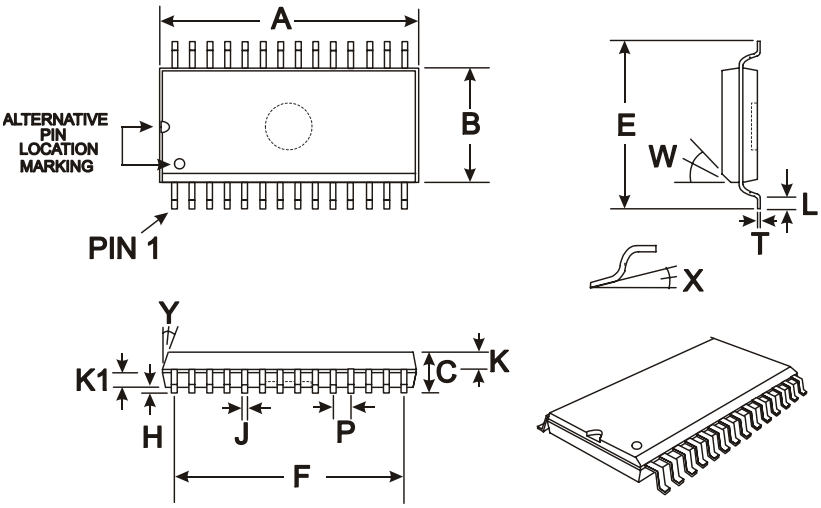

	DIM.	MIN.	TYP.	MAX.
*	A	0.697 (17.70)		0.711 (18.06)
*	B	0.286 (7.26)		0.299 (7.59)
	C	0.088 (2.24)		0.105 (2.67)
	E	0.390 (9.90)		0.419 (10.64)
	F		0.650 (16.51)	
	H	0.003 (0.08)		0.020 (0.51)
	J	0.013 (0.33)		0.018 (0.46)
	K		0.041 (1.04)	
	K1		0.041 (1.04)	
	L	0.016 (0.41)		0.050 (1.27)
	P		0.050 (1.27)	
	T	0.009 (0.23)		0.0125 (0.32)
	W		45°	
	X	0°		10°
	Y		7°	

NOTE :

* A & B are reference datum's and do not include mold deflash or protrusions.

All dimensions in inches (mm.)
Angles are in degrees
Co-Planarity of leads within 0.004” (0.1mm)

Figure 50: 28-pin SOIC (D1) Mechanical Outline: *Order as part no. CMX838D1*

Handling precautions: This product includes input protection, however, precautions should be taken to prevent device damage from electro-static discharge. CML does not assume any responsibility for the use of any circuitry described. No IPR or circuit patent licences are implied. CML reserves the right at any time without notice to change the said circuitry and this product specification. CML has a policy of testing every product shipped using calibrated test equipment to ensure compliance with this product specification. Specific testing of all circuit parameters is not necessarily performed.

www.cmlmicro.com

For FAQs see: www.cmlmicro.com/products/faqs/

For a full data sheet listing see: www.cmlmicro.com/products/datasheets/download.htm

For detailed application notes: www.cmlmicro.com/products/applications/

CML Microcircuits (UK) Ltd COMMUNICATION SEMICONDUCTORS	CML Microcircuits (USA) Inc. COMMUNICATION SEMICONDUCTORS	CML Microcircuits (Singapore) Pte Ltd COMMUNICATION SEMICONDUCTORS	
Oval Park, Langford, Maldon, Essex, CM9 6WG - England.	4800 Bethania Station Road, Winston-Salem, NC 27105 - USA.	No 2 Kallang Pudding Road, #09 to 05/06 Mactech Industrial Building, Singapore 349307	No. 218, Tian Mu Road West, Tower 1, Unit 1008, Shanghai Kerry Everbright City, Zhabei, Shanghai 200070, China.
Tel: +44 (0)1621 875500 Fax: +44 (0)1621 875600	Tel: +1 336 744 5050, 800 638 5577 Fax: +1 336 744 5054	Tel: +65 6745 0426 Fax: +65 6745 2917	Tel: +86 21 6317 4107 +86 21 6317 8916 Fax: +86 21 6317 0243
Sales: sales@cmlmicro.com	Sales: us.sales@cmlmicro.com	Sales: sg.sales@cmlmicro.com	Sales: cn.sales@cmlmicro.com.cn
Technical Support: techsupport@cmlmicro.com	Technical Support: us.techsupport@cmlmicro.com	Technical Support: sg.techsupport@cmlmicro.com	Technical Support: sg.techsupport@cmlmicro.com

Mouser Electronics

Authorized Distributor

Click to View Pricing, Inventory, Delivery & Lifecycle Information:

CML Microcircuits:

CMX838E1 CMX838E1-REEL