MARKETING SALES DRAWING

DIMENSIONS IN INCHES - DO NOT SCALE THIS DRAWING
DIMENSIONS IN METRIC - [ ]

Electrical Testing per Tusonix standard test plans and Mil-Std-202 Test Methods.

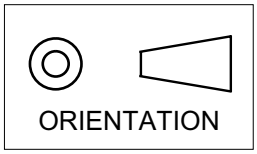

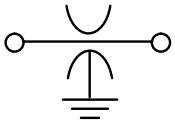

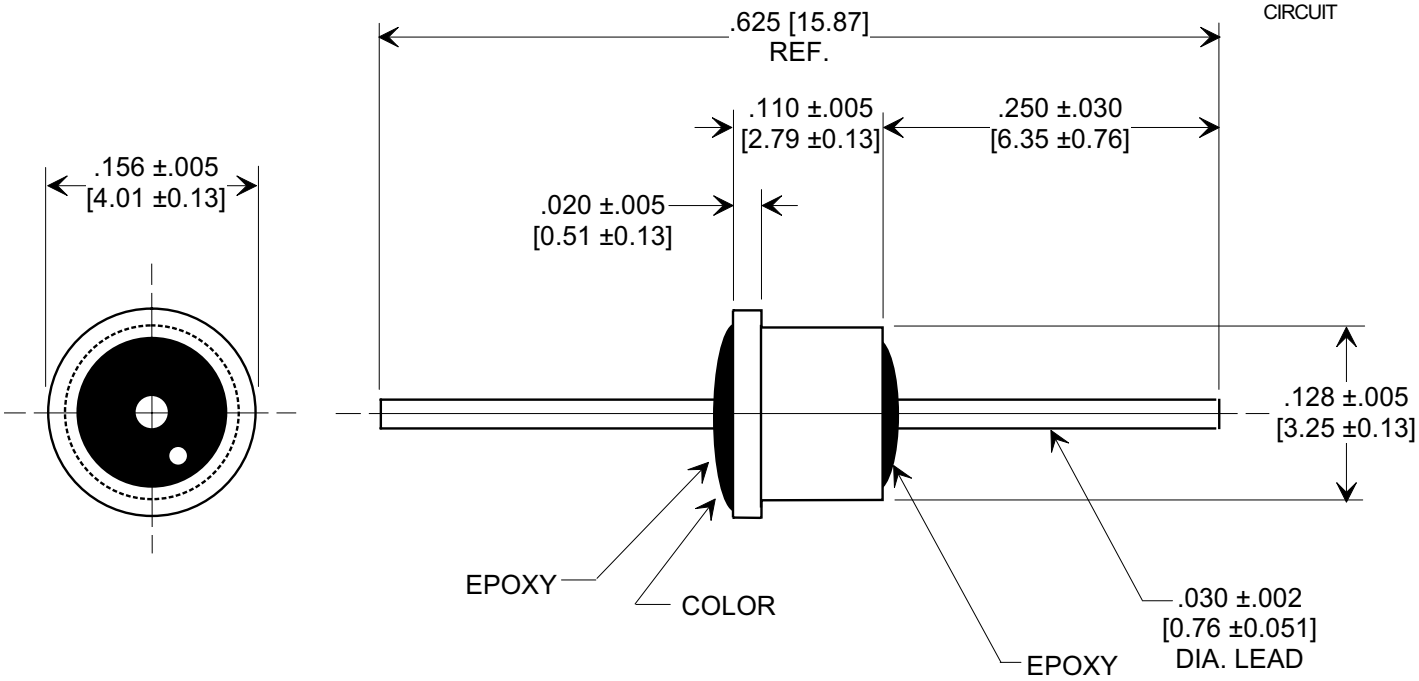

NOTES:

1. **Operating temperature range -55° C to +125° C.**
2. **Gold plated case / Gold plated lead.**
3. **Epoxy sealed.**
4. **Max. recommended soldering temperature: 260° C.**
   See installation recommendations.
5. **Recommended mounting hole: .135 [3.43] dia.**
6. **Solder preform available for mounting.**
7. **Tusonix Standard part number: 4302-004.**
   Tusonix RoHS compliant part number: 4302-004 LF.
   Customer must specify Standard or RoHS part number when ordering.
8. **RoHS compliant part marked with additional dark green dot for identification.**

Cx (pF)	TOL.	DC WORKING VOLTAGE		DC CURRENT (AMPS)	DWV (VDC)	I.R. MIN. @ 100 (VDC.)	MIN. NO LOAD INSERTION LOSS (dB) @ 25° C PER MIL-STD-220					COLOR CODE
		85°C	125°C				1 MHz	10 MHz	100 MHz	1GHz	10 GHz	
5000	GMV	150	100	10	250	10 G	---	15	30	45	55	YELLOW

REVISION RECORD

0	Original Release C.O. **20020213-4-02**	NOTE 2 REVISED GOLD WAS SILVER L.E. 06-05-02
1	**20020605-1-01**	DC CURRENT WAS 5. S.M. 01-20-03
2	**20030116-3-02**	ADDED NOTES 7 & 8. S.M. 05-31-05
3	**20050513-4-12**	

--TOLERANCES--
Unless Otherwise Specified
DECIMAL ±
ANGLES ±

TUSONIX
TUCSON, ARIZONA

Title
SOLDER MOUNT EMI FILTER

Drawn S.M. 02-14-02
Scale 7 X
Approved T.C. 02-14-02

A **4302-004**

X-2015 Rev-0

Mouser Electronics

Authorized Distributor

Click to View Pricing, Inventory, Delivery & Lifecycle Information:

Tusonix / CTS:
4302-004LF