CROUZET MOTORS

Starting/running torque from 30 and 37.5 mN.m 3.5 Watts Part number 82520014

- Constant speed, dependent on supply frequency
- Direction of rotation controlled by dephasing capacitor
- Sintered bearing lubricated for life
- Silent operation
- UL, CSA (classe B)

Part numbers

	Type	Type	Voltages/Frequencies
82 520 014	3.5 Watts	82 520 0	230-240 V 50 Hz

Specifications

Base speed of motor (rpm)	250
Absorbed power (W)	3,5
Usable Power (W)	0,98
Starting/running torque (mNm)	37,5
Stall torque (mNm)	42
Temperature rise (^{o} C)	55
Ambient temperature (°C)	-10+75
Maximum inertial load that can be moved (g.cm^2)	33
Number of offload starts	
Insulation resistance (MΩ)	75x10^3
Breakdown voltage (V-50 Hz)	1800 -1 sec.
Weight (g)	210
Wires length mm (approximately)	250
Protection rating	IP40

Accessories

Voltages/Frequencies	µF	V AC	Code
Capacitors motor 82 520 0	Condensateur		
230-240 V - 50 Hz	0,1 ± 10 %	500	26 231 941
115 V 60 Hz	0,33 ± 10 %	240	26 231 801
24 V - 50 Hz	8,2 ± 10 %	63	26 231 711

Dimensions (mm)

82 520 0

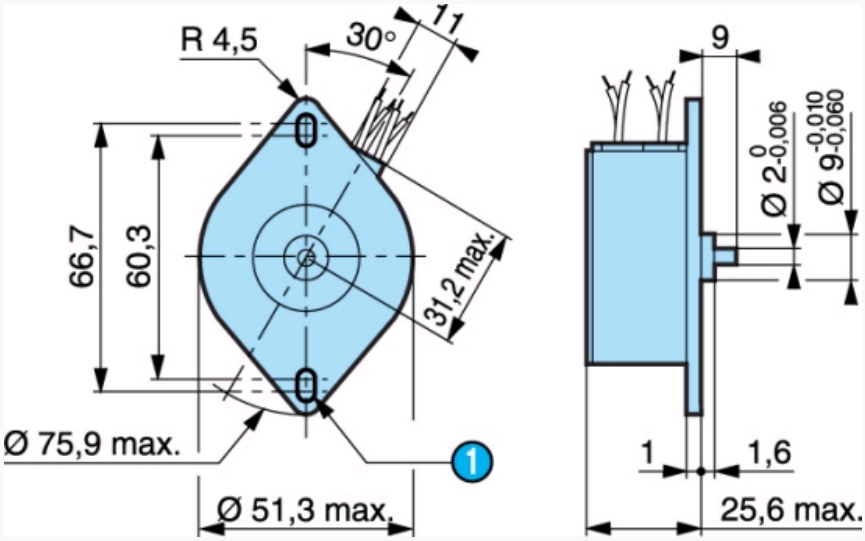

Unless otherwise specified, the characteristics given are applicable to all or part of the product range selected

Nº	Legend
1	2 oblong fixing holes 3.5 wide

Connections

In parallel
Motors 82 520 0 - 82 520 4

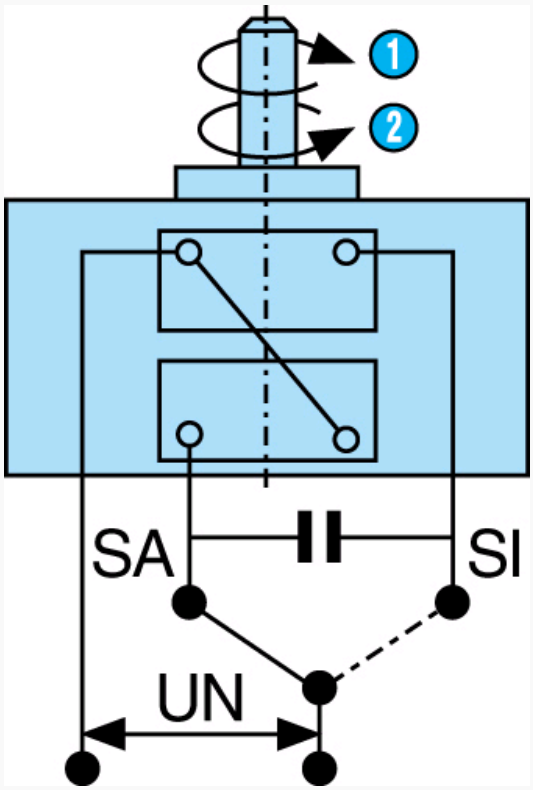

Nº	Legend
1	SA : Clockwise
2	SI : Anti-clockwise

Product adaptations

- Different voltages available
- Pinion on output shaft
- Special output shafts
- Special supply voltages
- Special cable lengths
- Special output bearings
- Special mounting plate
- Special connectors

Mouser Electronics

Authorized Distributor

Click to View Pricing, Inventory, Delivery & Lifecycle Information:

Crouzet:
82520014