BMI085

6-axis Motion Tracking for High-performance Applications

BMI085: Data Sheet

Document revision	1.4
Document release date	September 2018
Document number	BST-BMI085-DS001-14
Technical reference code	0 273 141 366
Notes	Data and descriptions in this document are subject to change without notice. Product photos and pictures are for illustration purposes only and may differ from the real product appearance

Basic Description

BMI085 is an inertial measurement unit (IMU) for the detection of movements and rotations in 6 degrees of freedom (6-DoF). It includes the functionality of two inertial sensors in one device: an advanced triaxial 16-bit gyroscope and a versatile, leading edge triaxial 16-bit accelerometer.

BMI085 is designed to meet all requirements for high performance consumer applications such as virtual, augmented and mixed reality applications and high-end gaming, platform stabilization applications such as image stabilization, or indoor navigation and dead-reckoning, for example in robotics applications. It also senses tilt, motion, inactivity and shock vibration in handhelds, computer peripherals, man-machine interfaces, virtual reality features and game controllers.

An evaluation circuitry (ASIC) converts the output of the micro-electro-mechanical sensing structures (MEMS), developed, produced and tested in BOSCH facilities. The corresponding chip-sets are packed into one single LGA 3.0mm x 4.5mm x 0.95mm housing. For optimum system integration, BMI085 is fitted with digital interfaces (SPI or I^2C), offering a wide VDDIO voltage range from 1.2V to 3.6V. To provide maximum performance and reliability each device is tested and ready-to-use calibrated.

To increase flexibility, both gyroscope and accelerometer can be operated individually, but can also be tied together for data synchronization purposes. The on-chip features comprise FIFOs for acceleration and gyroscope data and interrupt controllers.

BMI085 has an excellent temperature behaviour with an outstanding low temperature coefficient of offset (TCO) and temperature coefficient of sensitivity (TCS).

Index of Contents

Basic Description **2**

1. Specification **7**

1.1 Electrical Specifications 7

1.1.1 Electrical Specifications: Accelerometer/Gyroscope 8

1.2 Accelerometer Specifications 9

1.3 Gyroscope Specifications 10

1.4 Temperature Sensor Specifications 11

1.5 Absolute Maximum Ratings 12

2. Block Diagram **13**

3. Quick Start Guide – Device Initialization **13**

4. Functional Description **14**

4.1 Power Management and Power Modes 14

4.1.1 Power Modes: Accelerometer 14

4.1.2 Power Modes: Gyroscope 15

4.2 Sensor Data 15

4.3 Sensor Time 16

4.4 Output Data Rate (ODR) and Low-pass Filter 16

4.4.1 Accelerometer 16

4.4.2 Gyroscope 16

4.5 Range Settings 16

4.6 Self-test 16

4.6.1 Accelerometer 17

4.6.2 Gyroscope 17

4.7 New Data Interrupt 18

4.7.1 Accelerometer 18

4.7.2 Gyroscope 18

4.8 Soft-Reset 18

4.9 FIFO 18

5. Register Maps 19

5.1 Communication with the sensor 19

5.2 Register Map: Accelerometer 20

5.3 Register Description: Accelerometer 21

5.3.1 Register 0x00: ACC_CHIP_ID 21

5.3.2 Register 0x02: ACC_ERR_REG 21

5.3.3 Register 0x03: ACC_STATUS 21

5.3.4 Register 0x12 – 0x17: ACC data 21

5.3.5 Register 0x18 – 0x1A: Sensortime data 22

5.3.6 Register 0x1D: ACC_INT_STAT_1 22

5.3.7 Register 0x22 – 0x23: Temperature sensor data 22

5.3.8 Register 0x40: ACC_CONF 23

5.3.9 Register 0x41: ACC_RANGE 24

5.3.10 Register 0x53: INT1_IO_CONF 24

5.3.11 Register 0x54: INT2_IO_CONF 25

5.3.12 Register 0x58: INT1_INT2_MAP_DATA 25

5.3.13 Register 0x6D: ACC_SELF_TEST 25

5.3.14 Register 0x7C: ACC_PWR_CONF 26

5.3.15 Register 0x7D: ACC_PWR_CTRL 26

5.3.16 Register 0x7E: ACC_SOFTRESET 26

5.4 Register Map: Gyroscope 27

5.5 Register Description: Gyroscope 28

5.5.1 Register 0x00: GYRO_CHIP_ID 28

5.5.2 Register 0x02 – 0x07: Rate data 28

5.5.3 Register 0x0A: GYRO_INT_STAT_1 28

5.5.4 Register 0x0F: GYRO_RANGE 29

5.5.5 Register 0x10: GYRO_BANDWIDTH 29

5.5.6 Register 0x11: GYRO_LPM1 30

5.5.7 Register 0x14: GYRO_SOFTRESET 30

5.5.8 Register 0x15: GYRO_INT_CTRL 30
5.5.9 Register 0x16: INT3_INT4_IO_CONF 31
5.5.10 Register 0x18: INT3_INT4_IO_MAP 31
5.5.11 Register 0x3C: GYRO_SELF_TEST 32

6. Digital Interface 33

6.1 Serial Peripheral Interface (SPI) 34
6.1.1 SPI interface of gyroscope part 35
6.1.2 SPI interface of accelerometer part 36

6.2 Inter-Integrated Circuit (I²C) 36

7. Pin-out and Connection Diagram 41

7.1 Pin-out 41

7.2 Connection diagram SPI 42

7.3 Connection diagram I^2C 42

8. Package 43

8.1 Outline Dimensions 43

8.2 Sensing axes orientation 44

8.3 Marking 45
8.3.1 Mass production samples 45
8.3.2 Engineering samples 45

8.4 PCB layout and soldering guidelines 45

8.5 Handling instructions 46

8.6 Tape and Reel specification 46
8.6.1 Orientation within the reel 47

8.7 Environmental safety 47
8.7.1 Halogen content 47

9. Legal Disclaimer 48

9.1 Engineering samples 48

9.2 Product use 48

9.3 Application examples and hints 48

10. Document History and Modification 49

1. Specification

If not stated otherwise, the given values are over lifetime and full performance temperature and voltage ranges, minimum/maximum values are ±3σ.

1.1 Electrical Specifications

Table 1: Electrical parameter specification

Parameter	Symbol	Condition	Min	Max	Unit
Supply Voltage Internal Domains	VDD		2.4	3.6	V
Supply Voltage I/O Domain	VDDIO		1.2	3.6	V
Voltage Input Low Level	$V_{IL,a}$	SPI & I²C		0.3VDDIO	-
Voltage Input High Level	$V_{IH,a}$	SPI & I²C	0.7VDDIO		-
Voltage Output Low Level	$V_{OL,a}$	I_{OL}<= 2mA, SPI		0.23VDDIO	-
Voltage Output High Level	V_{OH}	I_{OH} <= 2mA, SPI	0.8VDDIO		-
Operating Temperature	T_A		-40	+85	°C

1.1.1 Electrical Specifications: Accelerometer/Gyroscope

Table 2: Electrical parameter specification accelerometer

Parameter	Symbol	Condition	Min	Typ	Max	Units
Total Supply Current in Normal mode	I_{DD}	VDD = VDDIO =3.0V, 25°C, g_{FS4g}		150		µA
Total Supply Current in Suspend Mode	I_{DDsum}	VDD = VDDIO =3.0V, 25°C		3		µA
Power-up time	t_{s_up}	Time to first valid sample from suspend mode			1	ms

Table 3: Electrical parameter specification gyroscope

Parameter	Symbol	Condition	Min	Typ	Max	Unit
Supply Current in Normal Mode	I_{DD}	VDD = VDDIO = 3.0V, 25°C, ODR =1kHz		5		mA
Supply Current in Suspend Mode	I_{DDsum}	VDD = VDDIO = 3.0V, 25°C		25		µA
Supply Current in Deep Suspend Mode	I_{DDdsum}	VDD = VDDIO = 3.0V, 25°C		<5		µA
Start-up time	t_{su}	to ±1°/s of final value; from power-off		30		ms
Wake-up time	t_{wusm}	From suspend- and deep suspend-modes		30		ms
Wake-up time	t_{wufpm}	From fast power-up mode		10		ms

1.2 Accelerometer Specifications

Table 4: Accelerometer specifications

Parameter	Symbol	Condition	Min	Typ	Max	Units
Acceleration Range	g_{FS2g}	Selectable via serial digital interface		±2		g
	g_{FS4g}			±4		g
	g_{FS8g}			±8		g
	g_{FS16g}			±16		g
Sensitivity	S_{2g}	g_{FS2g}, T_A=25°C		16384		LSB/g
	S_{4g}	g_{FS4g}, T_A=25°C		8192		LSB/g
	S_{8g}	g_{FS8g}, T_A=25°C		4096		LSB/g
	S_{16g}	g_{FS16g}, T_A=25°C		2048		LSB/g
Sensitivity Temperature Drift	TCS			0.002		%/K
Zero-g Offset	Off	Nominal VDD and VDDIO, 25°C, g_{FS4g}		20		mg
Zero-g Offset Temperature Drift	TCO			<0.2		mg/K
Output Data Rate	ODR		12.5		1600	Hz
Bandwidth range	BW	3dB cut-off frequency of the accelerometer depends on ODR and OSR	5		684 (353 for Z-axis)	Hz
Nonlinearity	NL	best fit straight line, g_{FS2g}		0.5		%FS
Output Noise Density	n_{rms}	g_{FS2g}, T_A=25°C Nominal VDD supplies Normal mode		135 (Z-axis) 105 (X- & Y-axis)		µg/√Hz
Cross Axis Sensitivity	S	relative contribution between any two of the three axes		0.5		%
Alignment Error	E_A	relative to package outline		0.5		°

1.3 Gyroscope Specifications

Table 5: Gyroscope specifications

Parameter	Symbol	Condition	Min	Typ	Max	Unit
Range	R_{FS125}	Selectable via serial digital interface		125		°/s
	R_{FS250}			250		°/s
	R_{FS500}			500		°/s
	R_{FS1000}			1000		°/s
	R_{FS2000}			2000		°/s
Sensitivity		Ta=25°C, R_{FS125}		262.144		LSB/°/s
		Ta=25°C, R_{FS250}		131.072		LSB/°/s
		Ta=25°C, R_{FS500}		65.536		LSB/°/s
		Ta=25°C, R_{FS1000}		32.768		LSB/°/s
		Ta=25°C, R_{FS2000}		16.384		LSB/°/s
Sensitivity tolerance		Ta=25°C, R_{FS2000}		±1		%
Sensitivity Change over Temperature	TCS	Nominal VDD supplies -40°C ≤ T_A ≤ +85°C R_{FS2000}		±0.03		%/K
Sensitivity Supply Volt. Drift	S_{VDD}	T_A=25°C, VDD_{min} ≤ VDD ≤ VDD_{max}		<0.4		%/V
Nonlinearity	NL	best fit straight line R_{FS1000}, R_{FS2000}		±0.05		%FS
g-Sensitivity		Sensitivity to acceleration stimuli in all three axis (frequency <20kHz)			0.1	°/s/g
Zero-rate Offset	Off Ω_x Ω_y and Ω_z	Nominal VDD supplies T_A=25°C, slow and fast offset cancellation off		±1		°/s
Zero-rate Offset Change over Temperature	TCO	Nominal VDD supplies -40°C ≤ T_A ≤ +85°C R_{FS2000}		±0.015		°/s per K
Zero-rate Offset Supply Volt. Drift	OffΩ_{VDD}	T_A=25°C, VDD_{min} ≤ VDD ≤ VDD_{max}		<0.1		°/s /V
Output Noise	n_{rms}	rms, BW=47Hz (@ 0.014°/s/√Hz)		0.1		°/s

Bandwidth BW	f_{-3dB}			523 230 116 64 47 32 23 12		Hz
Data rate (set of x,y,z rate)				2000 1000 400 200 100		Hz
Data rate tolerance (set of x,y,z rate)				±0.3		%
Cross Axis Sensitivity		Sensitivity to stimuli in non-sense-direction		±1		%

1.4 Temperature Sensor Specifications

Table 6: Temperature sensor specifications

Parameter	Symbol	Condition	Min	Typ	Max	Units
Temperature Sensor Measurement Range	T_S		-104		150	°C
Temperature Sensor Slope	dT_S			0.125		K/LSB
Temperature Sensor Offset error	OT_S	at 25°C		±1		K

1.5 Absolute Maximum Ratings

Table 7: Absolute maximum ratings

Parameter	Condition	Min	Max	Units
Voltage at Supply Pin	VDD Pin	-0.3	4	V
	VDDIO Pin	-0.3	4	V
Voltage at any Logic Pin	Non-Supply Pin	-0.3	VDDIO+0.3	V
Passive Storage Temp. Range	≤ 65% rel. H.	-50	+150	°C
Mechanical Shock	Duration ≤ 200µs		10,000	g
	Duration ≤ 1.0ms		2,000	g
	Free fall onto hard surfaces		1.8	m
ESD	HBM, at any Pin		2	kV
	CDM		500	V
	MM		200	V

Note: Stress above these limits may cause damage to the device. Exceeding the specified electrical limits may affect the device reliability or cause malfunction.

2. Block Diagram

Figure 1 shows the basic building blocks of the BMI085:

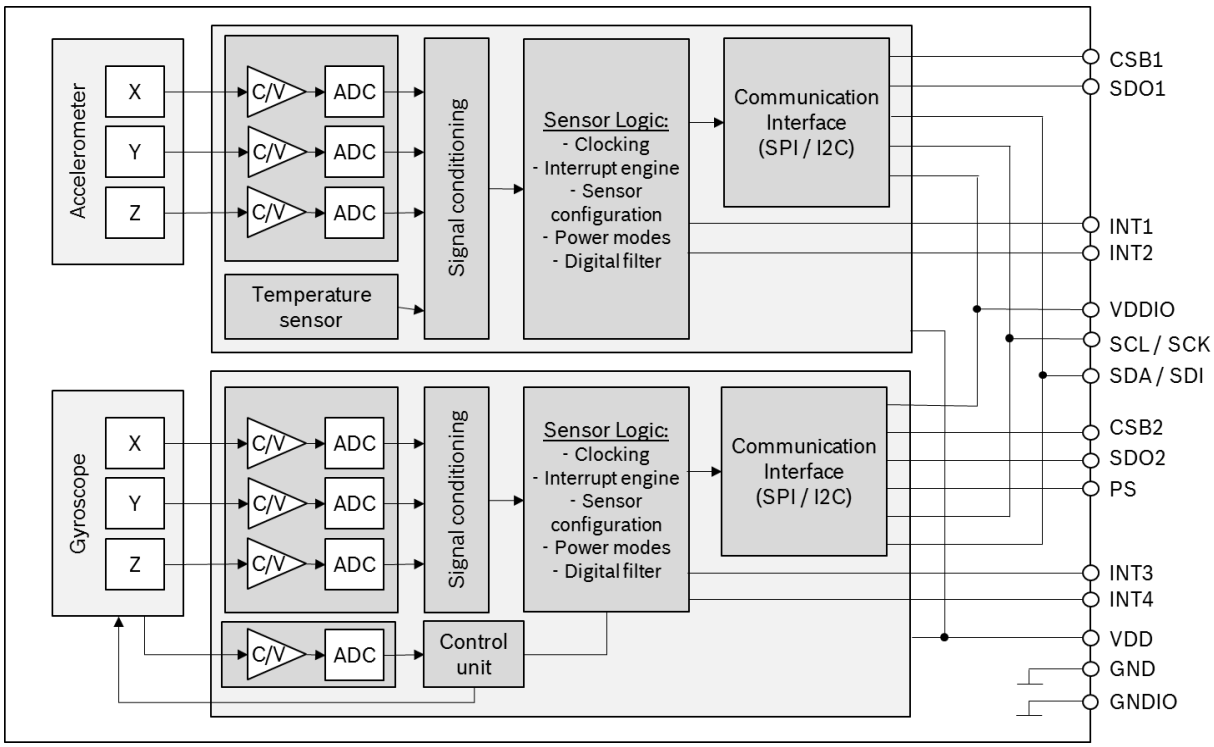

Figure 1: Block diagram of BMI085

3. Quick Start Guide – Device Initialization

For a proper device initialization, the following steps should be considered:

- The user must decide on the interface (I2C or SPI) already during HW design: with the PS pin the user determines which interface the sensor should listen to (see chapter 6).
- The gyroscope part of the BMI085 initializes its I/O pins according to the selection given by the PS pin.
- The accelerometer part starts in I2C mode. It will stay in I2C mode until it detects a rising edge on the CSB1 pin (chip select of the accelerometer), on which the accelerometer part switches to SPI mode and stays in this mode until the next power-up-reset.
- To change the accelerometer to SPI mode in the initialization phase, the user could perform a dummy SPI read operation, e.g. of register ACC_CHIP_ID (the obtained value will be invalid).

After the POR the gyroscope is in normal mode, while the accelerometer is in suspend mode. To switch the accelerometer into normal mode, the user must perform the following steps:

a. Power up the sensor
b. Wait 1 ms
c. Enter normal mode by writing ‘4’ to ACC_PWR_CTRL
d. Wait for 50 ms

4. Functional Description

4.1 Power Management and Power Modes

The BMI085 has two distinct power supply pins:

- VDD is the main power supply for the internal blocks
- VDDIO is a separate power supply pin mainly used for the supply of the interface

There are no limitations on the voltage levels of both pins relative to each other, as long as each of them lies within its operating range. Furthermore, the device can be completely switched off (VDD = 0V) while keeping the VDDIO supply on (VDDIO > 0V) or vice versa.

When the VDDIO supply is switched off, all interface pins (CSB, SDI, SCK, PS) must be kept close to GND_{IO} potential.

The device contains a power-on reset (POR) generator. It resets the logic part and the register values after powering-on VDD and VDDIO. This means that all application specific settings which are not equal to the default settings (refer to 6.2 register map accelerometer and to 8.2 register map gyroscope), must be changed back to their designated values after POR.

Please note: the POR resets also the interface. For the gyroscope part, the interface is defined by the voltage level on the PS pin. The interface of the accelerometer part is defined by the voltage level of the CSB1 pin at the moment when the POR is initiated (see chapter 3).

4.1.1 Power Modes: Accelerometer

The power state of the BMI085 accelerometer is controlled through the register ACC_PWR_CTRL. The register ACC_PWR_CTRL enables and disables the accelerometer and the temperature sensor.

To enter **normal mode**, the value 0x04 must be written to ACC_PWR_CTRL.

To enter **suspend mode**, register ACC_PWR_CTRL must be cleared.

Note: the sensor is in suspend mode after reset (POR or soft-reset), thus the user actively needs to enter normal mode in order to obtain acceleration values.

Note: after POR or soft-reset, the acceleration sensor needs up to 1ms boot time. When changing power modes, the sensor needs up to 5ms to settle. Any communication with the sensor during this time should be avoided.

4.1.2 Power Modes: Gyroscope

The gyroscope has 3 different power modes. Besides normal mode, which represents the fully operational state of the device, there are 2 energy saving modes: suspend mode and deep-suspend mode.

After power-up gyro is in normal mode so that all parts of the device are held powered-up and data acquisition is performed continuously.

In **suspend mode** the whole analog part is powered down. No data acquisition is performed. While in suspend mode the latest rate data and the content of all configuration registers are kept. The registers can still be read (though they are not updated).

Suspend mode is entered by writing 0x80 to the register GYRO_LPM1. It can be left by writing 0x00 to GYRO_LPM1 or by a soft reset (see 4.8).

Although write access to registers is supported at the full interface clock speed (SCL or SCK), a waiting period must be inserted between two consecutive write cycles (please refer also to section 9.2.1).

In **deep suspend mode** the device reaches the lowest possible power consumption. Only the interface section is kept alive. No data acquisition is performed and the content of the configuration registers is lost.

Deep suspend mode is entered by writing 0x20 to the register GYRO_LPM1. It can be left by writing 0x00 to GYRO_LPM1 or by a soft reset (see 4.8).

Please note, that all application specific settings, which are not equal to the default settings, must be reset to its designated values after leaving deep-suspend mode.

Note: after POR or soft-reset, or when switching between the different power modes, the gyroscope sensor needs up to 30ms time to reach the new state. Any communication with the sensor during this time should be avoided.

4.2 Sensor Data

The width of the gyroscope and accelerometer sensor data is 16 bits (11 bits for the temperature sensor) given in two's complement representation.
The bits for each axis are split into an MSB upper part and an LSB lower part. Reading the sensor data registers shall always start with the LSB part. In order to ensure the integrity of the sensor data, the content of an MSB register is locked by reading the corresponding LSB register (shadowing procedure).

For details regarding the registers and the interpretation of the data found in these registers see:

- chapter 5.5.2 for the gyroscope part
- chapter 5.3.4 or the accelerometer part
- chapter 5.3.7 for the temperature sensor

The burst-access mechanism provides an efficient way to read out the angular rate data in I^2C or SPI mode. During a burst-access, the sensor automatically increments the starting read address after each byte. The burst-access allows data to be transferred over the I^2C bus with an up to 50% reduced data density. The sensor data (angular rate or acceleration data) in all read-out registers is locked as long as the burst read access is active. Reading the sensor data registers of each gyroscope and accelerometer part in burst read access mode ensures that the sensor values in all readout registers belong to the same sample.

4.3 Sensor Time

The accelerometer part of BMI085 has a built-in counter with a width of 24 bits. It increments periodically with a resolution of 39.0625µs. Details can be found in chapter 5.3.5.

4.4 Output Data Rate (ODR) and Low-pass Filter

The sensor signals from the acceleration sensor and gyroscope analog front-end are each routed through a low-pass filter.

4.4.1 Accelerometer

The 3db cutoff frequency of the digital low-pass filter depends on the chosen ODR as well as on the over-sampling-ratio (OSR). Both can be configured in register ACC_CONF. The following table lists the possible options:

Table 8: 3dB cutoff frequency of the accelerometer according to ODR and OSR settings in ACC_CONF register

Accelerometer ODR [Hz]	Normal (acc_bwp = 0xA)	OSR2 (acc_bwp = 0x9)	OSR4 (acc_bwp = 0x8)
12.5	5 Hz	3 Hz	1 Hz
25	10 Hz	5 Hz	3 Hz
50	20 Hz	10 Hz	5 Hz
100	40 Hz	20 Hz	10 Hz
200	80 Hz	41 Hz	20 Hz
400	162 Hz (155 Hz for z channel)	80 Hz	41 Hz
800	324 Hz (262 Hz for z channel)	162 Hz (155 Hz for z channel)	80 Hz
1600	684 Hz (353 Hz for z channel)	324 Hz (262 Hz for z channel)	162 Hz (155 Hz for z channel)

4.4.2 Gyroscope

The user can choose between 8 different ODR and low pass filter bandwidth settings (see section 5.5.5).

4.5 Range Settings

The measurement range can be set through the registers described in section 5.3.9 for the accelerometer and in section 5.5.4 for the gyroscope.

4.6 Self-test

The BMI085 incorporates a self-test feature for both the accelerometer and the gyroscope, indicating whether the sensor is still ok.

4.6.1 Accelerometer

The self-test feature allows for checking the sensor functionality by applying electrostatic forces to the sensor core instead of external accelerations. By physically deflecting the seismic mass, the entire signal path of the sensor is tested. Activation of the self-test results in a static offset in the acceleration data. Any external acceleration or gravitational force, which is applied to the sensor during a self-test, will be observed in the sensor output as a superposition of the acceleration and the self-test signal. This means that the self-test signal depends on the orientation of the sensor. To overcome this, the full self-test procedure should be performed under static circumstances, e.g. when the part is not excited to any acceleration except gravity.

The recommended self-test procedure is as follows:

1) Set ±16*g* range by writing 0x03 to register ACC_RANGE (0x41)
2) Set ODR=1.6kHz, continuous sampling mode, “normal mode” (norm_avg4) by writing 0xA7 to register ACC_CONF (0x40)
   - Continuous filter function: set bit7 in ACC_CONF
   - “normal avg4 mode”: ACC_CONF |= 0x02<<4
   - ODR=1.6kHz: ACC_CONF |= 0x0C
3) Wait for > 2 ms
4) Enable the positive self-test polarity (i.e. write 0x0D to register ACC_SELF_TEST (0x6D))
5) Wait for > 50ms
6) Read the accelerometer offset values for each axis (positive self-test response)
7) Enable the negative self-test polarity (i.e. write 0x09 to register ACC_SELF_TEST (0x6D))
8) Wait for > 50ms
9) Read the accelerometer offset values for each axis (negative self-test response)
10) Disable the self-test (i.e. write 0x00 to register ACC_SELF_TEST (0x6D))
11) Calculate difference of positive and negative self-test response and compare with the expected values (see table below)
12) Wait for > 50ms to let the sensor settle to normal mode steady state operation

Table 9: Accelerometer self-test: resulting minimum difference signal between positive and negative self-test signal

x-axis signal	y-axis signal	z-axis signal
≥1000 mg	≥1000 mg	≥500 mg

It is recommended to perform a reset of the device after a self-test has been performed, since the self-test response also affects the interrupt generation. If the reset cannot be performed, the following sequence must be kept to prevent unwanted interrupt generation: disable interrupts, change parameters of interrupts, wait for at least 50ms, and enable desired interrupts.

4.6.2 Gyroscope

A built-in self-test facility of the gyro does not deflect the mechanical MEMS structure (as the accelerometer self-test does), but this test also provides a quick way to determine if the gyroscope is operational within the specified conditions.

To trigger the self-test, bit #0 (‘bite_trig’) in address GYRO_SELF_TEST must be set. When the test is finished, bit #1 (‘bist_rdy’) will be set by the gyro and the test result can then be found in bit #2 (‘bist_fail’). A ‘0’ indicates that the test was passed without issues. If a failure occurred, the bit ‘bist_fail’ will be set to ‘1’.

A further test which is running continuously in the background can be checked by reading bit #4 in address GYRO_SELF_TEST. Proper sensor function is indicated if the bit is set to ‘1’.

4.7 New Data Interrupt

Both accelerometer and gyroscope part offer a new data ready interrupt, which fires whenever a new data sample set is complete and made available in the corresponding sensor data registers. This allows a low latency data readout.

4.7.1 Accelerometer

The new data interrupt flag can be found in the register ACC_INT_STAT_1 (bit #7). It is set whenever new data is available in the data registers and cleared automatically.

The interrupt can be mapped to the interrupt pins INT1 and/or INT2 in register INT1_INT2_MAP_DATA.

Both interrupt pins INT1 and INT2 can be configured regarding their electrical behavior (see INT1_IO_CONF and INT2_IO_CONF).

4.7.2 Gyroscope

The gyroscope provides a new data interrupt, which will generate an interrupt every time after storing a new value of z-axis angular rate data in the data register. The interrupt is cleared automatically after 280-400 µs.

In contrast to the accelerometer part, for the gyro the new data interrupt must be explicitly enabled by writing 0x80 to the register GYRO_INT_CTRL.

The interrupt can be mapped to the interrupt pins INT3 and/or INT4 in register INT3_INT4_IO_MAP.

Both interrupt pins INT3 and INT4 can be configured regarding their electrical behavior (see INT3_INT4_IO_CONF).

4.8 Soft-Reset

A soft-reset can be initiated at any time

- for the accelerometer part by writing the command *soft-reset (0xB6)* to register ACC_SOFTRESET (see 5.3.16)
- for the gyroscope part by writing the command *soft-reset (0xB6)* to register GYRO_SOFTRESET (see 5.5.7)

The soft-reset performs a fundamental reset to the device, which is largely equivalent to a power cycle. Following a delay, all user configuration settings are overwritten with their default state wherever applicable.

4.9 FIFO

BMI085 offers two integrated FIFO (First In, First Out) buffers for accelerometer and gyroscope sensor signals, helping the user to reduce or even omit time critical read access to the sensor in order to obtain data with a high timing precision.

For details, refer the Application Note: BMI08x FIFO Usage

5. Register Maps

5.1 Communication with the sensor

The entire communication with the device is performed by reading from and writing to registers. Registers have a width of 8 bits; they are mapped to an 8-bit address space. Accelerometer and gyroscope have individual register maps. The selection of the appropriate register map is done on digital interface level by either selecting the corresponding chip select pin (SPI mode) or I^2C address (I^2C mode). For details regarding the digital interface, see chapter 0.

The functional registers and the register addresses containing functional bits are marked in the following register maps. All non-functional registers are marked as reserved and should be completely ignored by the user.

It is recommended to mask out (logical *and* with zero) non-functional bits (marked with '-') of registers which partially contain functional bits (i.e. read the register content first, changing bit by means of bit-wise operations, and write the modified byte back to the register).

Meaning of colors in the register maps:

read/write	read only	write only

5.2 Register Map: Accelerometer

Reg. Addr.	Register Name	Reset Value	bit7	bit6	bit5	bit4	bit3	bit2	bit1	bit0
0x7E	ACC_SOFTRESET	0x00	softreset_cmd (0xb6)							
0x7D	ACC_PWR_CTRL	0x00	acc_enable							
0x7C	ACC_PWR_CONF	0x03	pwr_save_mode							
0x7B - 0x6E: reserved			-							
0x6D	ACC_SELF_TEST	0x00	acc_self_test							
0x6B - 0x59: reserved			-							
0x58	INT_MAP_DATA	0x00	-	int2_drdy	-			int1_drdy	-	
0x57 - 0x55: reserved			-							
0x54	INT2_IO_CTRL	0x00	-			int2_in	int2_out	int2_od	int2_lvl	-
0x53	INT1_IO_CTRL	0x00	-			int1_in	int1_out	int1_od	int1_lvl	-
0x52 - 0x42: reserved			-							
0x41	ACC_RANGE	0x01	-						acc_range	
0x40	ACC_CONF	0xA8	acc_bwp				acc_odr			
0x3F - 0x24: reserved			-							
0x23	TEMP_LSB	0x00	temperature[2:0]			-				
0x22	TEMP_MSB	0x00	temperature[10:3]							
0x21 - 0x1E: reserved			-							
0x1D	ACC_INT_STAT_1	0x00	acc_drdy	-						
0x1C - 0x1B: reserved			-							
0x1A	SENSORTIME_2	0x00	sensor_time[23:16]							
0x19	SENSORTIME_1	0x00	sensor_time[15:8]							
0x18	SENSORTIME_0	0x00	sensor_time[7:0]							
0x17	ACC_Z_MSB	0x00	acc_z[15:8]							
0x16	ACC_Z_LSB	0x00	acc_z[7:0]							
0x15	ACC_Y_MSB	0x00	acc_y[15:8]							
0x14	ACC_Y_LSB	0x00	acc_y[7:0]							
0x13	ACC_X_MSB	0x00	acc_x[15:8]							
0x12	ACC_X_LSB	0x00	acc_x[7:0]							
0x11 - 0x04: reserved			-							
0x03	ACC_STATUS	0x10	drdy_acc	-						
0x02	ACC_ERR_REG	0x00	-			error_code			-	fatal_err
0x01	-	-	-							
0x00	ACC_CHIP_ID	0x1F	acc_chip_id							

5.3 Register Description: Accelerometer

5.3.1 Register 0x00: ACC_CHIP_ID

Bit	Access	Reset value	Description
[7:0]	RO	0x1F	Contains identifier code of acceleration sensor

5.3.2 Register 0x02: ACC_ERR_REG

Reports sensor error conditions.

Bit	Name	Access	Reset value	Description
[7:5]	*reserved*			
[4:2]	error_code	RO	0x00	Error codes for persistent errors: 0x00: no error 0x01: error occurred in accelerometer configuration (unvalid data in register ACC_CONF)
[1]	*reserved*			
[0]	fatal_err	RO	0x0	Fatal Error, chip is not in operational state (Boot-, power-system). This flag will be reset only by power-on-reset or soft-reset.

5.3.3 Register 0x03: ACC_STATUS

Sensor status flag.

Bit	Name	Access	Reset value	Description
[7]	acc_drdy	RO	0x0	Data ready for Accelerometer. Reset when one acceleration data register is read out.
[6:0]	*reserved*			

5.3.4 Register 0x12 – 0x17: ACC data

Registers containing the acceleration sensor output. The sensor output is stored as signed 16 bit number in 2's complement format in each 2 registers. From the registers, the acceleration values can be calculated as follows:

Accel_X_int16 = ACC_X_MSB * 256 + ACC_X_LSB
Accel_Y_int16 = ACC_Y_MSB * 256 + ACC_Y_LSB
Accel_Z_int16 = ACC_Z_MSB * 256 + ACC_Z_LSB

When a register is read containing the LSB value of an acceleration value, the corresponding MSB register is locked internally, until it is read. By this mechanism, it is ensured that both LSB and MSB values belong to the same acceleration value and are not updated between the readouts of the individual registers.

The unit is in LSB. The conversion from LSB to acceleration (mg) is based on the range settings and can be calculated as follows (<0x41>: content of the ACC_RANGE register):

Accel_X_in_mg = Accel_X_int16 / 32768 * 1000 * 2^(<0x41> + 1)
Accel_Y_in_mg = Accel_Y_int16 / 32768 * 1000 * 2^(<0x41> + 1)
Accel_Z_in_mg = Accel_Z_int16 / 32768 * 1000 * 2^(<0x41> + 1)

5.3.5 Register 0x18 – 0x1A: Sensortime data

Registers containing the value of the internal 24-bit counter.

- Register 0x18 (SENSORTIME_0) contains the lower 8 bits of the counter. This register is incremented every 39.0625 µs.
- Register 0x19 (SENSORTIME_1) contains the middle 8 bits of the counter. This register is incremented on SENSORTIME_0 overflow, which is every 10 ms.
- Register 0x1A (SENSORTIME_2) contains the higher 8 bits of the counter. This register is incremented on SENSORTIME_1 overflow, which is every 2.56 s.

The complete 24-bit counter overflows after 655.36 s or almost 11 minutes.

5.3.6 Register 0x1D: ACC_INT_STAT_1

Interrupt status register.

Bit	Name	Access	Reset value	Description
[7]	acc_drdy	RO	0x00	Acceleration data ready interrupt. Cleared on read of this register
[6:0]	*reserved*			

5.3.7 Register 0x22 – 0x23: Temperature sensor data

Registers containing the temperature sensor data output. The data is stored in an 11-bit value in 2's complement format. The resolution is 0.125°C/LSB, thus the temperature can be obtained as follows:

```
Temp_uint11 = (TEMP_MSB * 8) + (TEMP_LSB / 32)
if Temp_uint11 > 1023:
        Temp_int11 = Temp_uint11 – 2048
else:
        Temp_int11 = Temp_uint11
Temperature = Temp_int11 * 0,125°C/LSB + 23°C
```

TEMP_MSB	TEMP_LSB	Temp_int11	Temperature
0x3E	0x00	496	85 °C
...	...	...	...
0x00	0x60	3	23.375 °C
0x00	0x40	2	23.250 °C
0x00	0x20	1	23.125 °C
0x00	0x00	0	23.0°C
...	...	...	...
0xC1	0x00	-504	-40 °C
0x80			Invalid

The temperature sensor data is updated every 1.28 s.

5.3.8 Register 0x40: ACC_CONF

Accelerometer configuration register.

Bit	Name	Access	Reset value	Description
[7:4]	acc_bwp	RW	0x0A	This parameter influences the bandwidth of the accelerometer low pass filter. For details, see section 4.4.1. Possible values: acc_bwp: Filter setting 0x08: OSR4 (4-fold oversampling) 0x09: OSR2 (2-fold oversampling) 0x0a: Normal others: *reserved*
[3:0]	acc_odr	RW	0x08	This parameter sets the output data rate ODR. Possible values: acc_odr: ODR in Hz 0x00 – 0x04: *reserved* 0x05: 12.5 0x06: 25 0x07: 50 0x08: 100 0x09: 200 0x0A: 400 0x0B: 800 0x0C: 1600 0x0D – 0X0F: *reserved*

5.3.9 Register 0x41: ACC_RANGE

Accelerometer range setting register.

Bit	Name	Access	Reset value	Description
[7:2]	*reserved*			
[1:0]	acc_range	RW	0x01	This parameter sets the measurement range. Possible values: acc_range: 0x00 – ±2*g*; 0x01 – ±4*g*; 0x02 – ±8*g*; 0x03 – ±16*g*

5.3.10 Register 0x53: INT1_IO_CONF

Configures the input/output pin INT1.

Bit	Name	Access	Reset value	Description
[7:5]	*reserved*			
[4]	int1_in	RW	0x00	Enable INT1 as input pin.
[3]	int1_out	RW	0x00	Enable INT1 as output pin.
[2]	int1_od	RW	0x00	int1_od: 0x00 – Push-pull; 0x01 – Open-drain
[1]	int1_lvl	RW	0x00	int1_lvl: 0x00 – Active low; 0x01 – Active high
[0]	*reserved*			

5.3.11 Register 0x54: INT2_IO_CONF

Configures the input/output pin INT2.

Bit	Name	Access	Reset value	Description
[7:5]				*reserved*
[4]	int2_io	RW	0x00	Enable INT2 as input pin.
[3]	int2_out	RW	0x00	Enable INT2 as output pin.
[2]	int2_od	RW	0x00	<table><tr><th>int2_od</th><th>Pin behavior</th></tr><tr><td>0x00</td><td>Push-pull</td></tr><tr><td>0x01</td><td>Open-drain</td></tr></table>
[1]	int2_lvl	RW	0x00	<table><tr><th>int2_lvl</th><th>Active state</th></tr><tr><td>0x00</td><td>Active low</td></tr><tr><td>0x01</td><td>Active high</td></tr></table>
[0]				*reserved*

5.3.12 Register 0x58: INT1_INT2_MAP_DATA

Map data ready interrupt to output pin INT1 and/or INT2.

Bit	Name	Access	Reset value	Description
[7]				*reserved*
[6]	Int2_drdy	RW	0x00	Map data ready interrupt to pin INT2
[5:3]				*reserved*
[2]	Int1_drdy	RW	0x00	Map data ready interrupt to pin INT1
[1:0]				*reserved*

5.3.13 Register 0x6D: ACC_SELF_TEST

Enables the sensor self-test signal, occurring as a steady offset to the sensor output. Note that the self-test needs to be switched off actively by the user (details see 4.6.1).

Bit	Access	Reset value	Description
[7:0]	RW	0x00	<table><tr><th>self_test</th><th>Behaviour</th></tr><tr><td>0x00</td><td>Self-test is switched off.</td></tr><tr><td>0x0D</td><td>Enable positive self-test signal.</td></tr><tr><td>0x09</td><td>Enable negative self-test signal.</td></tr></table>

5.3.14 Register 0x7C: ACC_PWR_CONF

Switches accelerometer into suspend mode for saving power. In this mode the data acquisition is stopped.

Bit	Name	Access	Reset value	Description
[7:0]	acc_pwr_save	RW	0x03	

acc_pwr_save	Filter setting
0x03	Suspend mode
0x00	Active mode

5.3.15 Register 0x7D: ACC_PWR_CTRL

Switches accelerometer ON or OFF. Required to do after every reset in order to obtain acceleration values.

Bit	Name	Access	Reset value	Description
[7:0]	acc_enable	RW	0x00	

acc_enable	Filter setting
0x00	Accelerometer off
0x04	Accelerometer on

5.3.16 Register 0x7E: ACC_SOFTRESET

Bit	Access	Reset value	Description
[7:0]	W	N/A	Writing a value of **0xB6** to this register resets the sensor. (Do not write any other content to this register.) Following a delay of 1 ms, all configuration settings are overwritten with their reset value. The soft-reset can be triggered from any operation mode.

5.4 Register Map: Gyroscope

Reg. Addr.	Register name	Reset value	bit7	bit6	bit5	bit4	bit3	bit2	bit1	bit0
0x3F - 0x3D: reserved			-							
0x3C	GYRO_SELF_TEST	N/A	-			rate_ok	-	bist_fail	bist_rdy	trig_bist
0x3B - 0x19: reserved			-							
0x18	INT3_INT4_IO_MAP	0x00	int3_int4_io_map							
0x17: reserved			-							
0x16	INT3_INT4_IO_CONF	0x0F	-				Int4_od	Int4_lvl	Int3_od	Int3_lvl
0x15	GYRO_INT_CTRL	0x00	gyro_int_ctrl							
0x14	GYRO_SOFTRESET	N/A	softreset							
0x13 - 0x12: reserved			-							
0x11	GYRO_LPM1	0x00	gyro_pm							
0x10	GYRO_BANDWIDTH	0x80	gyro_bw							
0x0F	GYRO_RANGE	0x00	gyro_range							
0x0E - 0x0B: reserved			-							
0x0A	GYRO_INT_STAT_1	N/A	gyro_drdy	-						
0x09 - 0x08: reserved			-							
0x07	RATE_Z_MSB	N/A	rate_z[15:8]							
0x06	RATE_Z_LSB	N/A	rate_z[7:0]							
0x05	RATE_Y_MSB	N/A	rate_y[15:8]							
0x04	RATE_Y_LSB	N/A	rate_y[7:0]							
0x03	RATE_X_MSB	N/A	rate_x[15:8]							
0x02	RATE_X_LSB	N/A	rate_x[7:0]							
0x01	*Reserved*	N/A	-							
0x00	GYRO_CHIP_ID	0x0F	gyro_chip_id							

5.5 Register Description: Gyroscope

5.5.1 Register 0x00: GYRO_CHIP_ID

Bit	Access	Reset value	Description
[7:0]	RO	0x0F	Contains identifier code of gyroscope.

5.5.2 Register 0x02 – 0x07: Rate data

Registers containing the angular velocity sensor output. The sensor output is stored as signed 16-bit number in 2's complement format in each 2 registers. From the registers, the gyro values can be calculated as follows:

Rate_X: RATE_X_MSB * 256 + RATE_X_LSB
Rate_Y: RATE_Y_MSB * 256 + RATE_Y_LSB
Rate_Z: RATE_Z_MSB * 256 + RATE_Z_LSB

When a register is read containing the LSB value of a rate value, the corresponding MSB register is locked internally, until it is read. By this mechanism, it is ensured that both LSB and MSB values belong to the same rate range value and are not updated between the readouts of the individual registers.

The unit is in LSB. The conversion from LSB to angular velocity (degree per second) is based on the range settings (see 5.5.4). For example, for the default range setting of 0x00 in register 0x0F, the following conversion table applies:

Sensor output [LSB]	Angular rate (in 2000°/s range mode)
+32767	+ 2000°/s
...	...
0	0°/s
...	...
-32767	- 2000°/s

5.5.3 Register 0x0A: GYRO_INT_STAT_1

Bit	Name	Access	Reset value	Description
[7]	gyro_drdy	RO	N/A	Data ready interrupt status. The interrupt is cleared automatically after 280-400 µs.

5.5.4 Register 0x0F: GYRO_RANGE

Bit	Access	Reset value	Description
[7:0]	RW	0x00	Angular rate range and resolution. Possible values:

gyro_range	Full scale [°/s]	Resolution
0x00	±2000	16.384 LSB/°/s ⇔ 61.0 m°/s / LSB
0x01	±1000	32.768 LSB/°/s ⇔ 30.5 m°/s / LSB
0x02	±500	65.536 LSB/°/s ⇔ 15.3 m°/s / LSB
0x03	±250	131.072 LSB/°/s ⇔ 7.6 m°/s / LSB
0x04	±125	262.144 LSB/°/s ⇔ 3.8m°/s / LSB

5.5.5 Register 0x10: GYRO_BANDWIDTH

Bit	Access	Reset value	Description
[7:0]	RW	0x80[1]	The register allows the selection of the rate data filter bandwidth and output data rate (ODR). Possible values:

gyro_bw	ODR [Hz]	Filter bandwidth [Hz]
0x00	2000	532
0x01	2000	230
0x02	1000	116
0x03	400	47
0x04	200	23
0x05	100	12
0x06	200	64
0x07	100	32

[1] Note: bit #7 is read-only and always ‚1', but has no function and can safely be ignored.

5.5.6 Register 0x11: GYRO_LPM1

Selection of the main power modes. Please note that only switching between normal mode and the suspend modes is allowed, it is not possible to switch between suspend and deep suspend and vice versa.

Bit	Access	Reset value	Description
[7:0]	RW	0x00	Switch to the main power modes. gyro_pm: 0x00 – normal gyro_pm: 0x80 – suspend gyro_pm: 0x20 – deep suspend

5.5.7 Register 0x14: GYRO_SOFTRESET

Bit	Access	Reset value	Description
[7:0]	W	N/A	Writing a value of **0xB6** to this register resets the sensor. (Other values are ignored.) Following a delay of 30 ms, all configuration settings are overwritten with their reset value. The soft reset can be triggered from any operation mode.

5.5.8 Register 0x15: GYRO_INT_CTRL

Bit	Access	Reset value	Description
[7:0]	RW	0x00	gyro_int_ctrl: 0x00 – No data ready interrupt is triggered gyro_int_ctrl: 0x80 – Enables the new data interrupt to be triggered on new data. See section Gyroscope for mapping the interrupt to an interrupt pin.

5.5.9 Register 0x16: INT3_INT4_IO_CONF

Sets electrical and logical properties of the interrupt pins.

Bit	Name	Access	Reset value	Description
[3]	Int4_od	RW	‘0’	Int4_od: Pin INT4 output configuration ‘0’: Push-pull ‘1’: Open-drain
[2]	Int4_lvl	RW	‘0’	Int4_lvl: Pin INT4 active state ‘0’: Active low ‘1’: Active high
[1]	Int3_od	RW	‘0’	Int3_od: Pin INT3 output configuration ‘0’: Push-pull ‘1’: Open-drain
[0]	Int3_lvl	RW	‘0’	Int3_lvl: Pin INT3 active state ‘0’: Active low ‘1’: Active high

5.5.10 Register 0x18: INT3_INT4_IO_MAP

Map the data ready interrupt pin to one of the interrupt pins INT3 and/or INT4.

Bit	Access	Reset value	Description
[7:0]	RW	0x00	int3_int4_io_map: Behavior 0x00: Data ready interrupt is not mapped to any INT pin. 0x01: Data ready interrupt is mapped to INT3 pin. 0x80: Data ready interrupt is mapped to INT4 pin. 0x81: Data ready interrupt is both mapped to INT3 and INT4 pin.

5.5.11 Register 0x3C: GYRO_SELF_TEST

Built-in self-test of gyroscope.

Bit	Access	Name	Reset value	Description
[4]	R	rate_ok	‘0’	A value of ‘1’ indicates proper sensor function.
[2]	R	bist_fail	‘0’	If ‘0’ and bist_rdy = ‘1’: built-in self-test is ok, sensor is ok If ‘1’ and bist_rdy = ‘1’: built-in self-test is not ok, sensor values may not be in expected range
[1]	R	bist_rdy	‘0’	If bit is ‘1’, built-in self-test has been performed and finished
[0]	W	trig_bist	N/A	Setting this bit to ‘1’ (i.e. writing 0x01 to this register) starts the built-in self-test.

6. Digital Interface

The BMI085 supports two serial digital interface protocols for communication as a slave with a host device: SPI and I²C. The active interface is selected by the state of the Pin#07 (PS) 'protocol select' pin:

- PS = ´VDDIO´ selects I²C
- PS = ´GND´ selects SPI

Important:

- Please note that in case of SPI protocol the initialization process for the accelerometer part of BMI085 requires some additional steps (see chapter 3).
- Please also note that as the pins of the package are shared between accelerometer and gyroscope part, it is not advisable to configure different interfaces for the two parts.

Both digital interfaces share partly the same pins. Additionally each inertial sensor (accelerometer and gyroscope) provides specific interface pins, which allow the user to operate the inertial sensors independently of each other. The mapping for each interface and each inertial sensor is given in the following table:

Table 10: Mapping of the interface pins

Pin#	Name	use w/ SPI	use w/ I²C	Description
15	SDO1	SDO1	address	SPI: Accel Data Output I²C: Used to set LSB of Accel I²C address
10	SDO2	SDO2	address	SPI: Gyro Data Output I²C: Used to set LSB of Gyro I²C address
9	SDA / SDI	SDI	SDA	SPI: Accel and Gyro Data In I²C: Serial Data
14	CSB1	CSB1	unused	SPI: Accel Chip Select (enable)
5	CSB2	CSB2	unused	SPI: Gyro Chip Select (enable)
8	SCL / SCK	SCK	SCL	SPI: Serial Clock SCK I²C: Serial Clock SCL

The following table shows the electrical specifications of the interface pins:

Table 11: Electrical specification of the interface pins

Parameter	Symbol	Condition	Min	Typ	Max	Units
Pull-up Resistance, CSB pin	R_{up}	Internal Pull-up Resistance to VDDIO	75	100	125	kΩ
Input Capacitance	C_{in}			5	10	pF
I²C Bus Load Capacitance (max. drive capability)	C_{I2C_Load}				400	pF

In order to allow for the correct internal synchronisation of data written to the BMI085, a **wait time** of at least 2 µs (normal mode) or 1000 µs (suspend mode) must be followed.

6.1 Serial Peripheral Interface (SPI)

The behavior of the SPI interface is slightly different between gyroscope part and accelerometer part:

- Initialization phase: as described in chapter 3, the interface of the gyroscope part is selected by the level of the PS pin. In contrast to this, the accelerometer part starts always in I^2C mode (regardless of the level of the PS pin) and needs to be changed to SPI mode actively by sending a rising edge on the CSB1 pin (chip select of the accelerometer), on which the accelerometer part switches to SPI mode and stays in this mode until the next power-up-reset. To change the sensor to SPI mode in the initialization phase, the user could perfom a dummy SPI read operation, e.g. of register ACC_CHIP_ID (the obtained value will be invalid).
- In case of read operations, the SPI interface of the accelerometer part does not send the requested information directly after the master has send the corresponding register address, but sends a dummy byte first, whose content is not predictable. Only after this dummy byte the desired content is sent. (This dummy byte procedure does not apply to the gyroscope part.) Please find more details below in section 6.1.2.

The timing specification for SPI of the BMI085 is given in the following table:

Table 12: SPI timing

Parameter	Symbol	Condition	Min	Max	Units
Clock Frequency	f_{SPI}	Max. Load on SDI or SDO = 25pF		10	MHz
SCK Low Pulse	t_{SCKL}		45		ns
SCK High Pulse	t_{SCKH}		45		ns
SDI Setup Time	t_{SDI_setup}		20		ns
SDI Hold Time	t_{SDI_hold}		20		ns
SDO Output Delay	t_{SDO_OD}	Load = 25pF		30	ns
		Load = 250pF, VDDIO > 2.4V		40	ns
CSB Setup Time	t_{CSB_setup}		40		ns
CSB Hold Time	t_{CSB_hold}		40		ns
Idle time between write accesses	t_{IDLE_wacc}	normal mode	2		µs

The following figure shows the definition of the SPI timings:

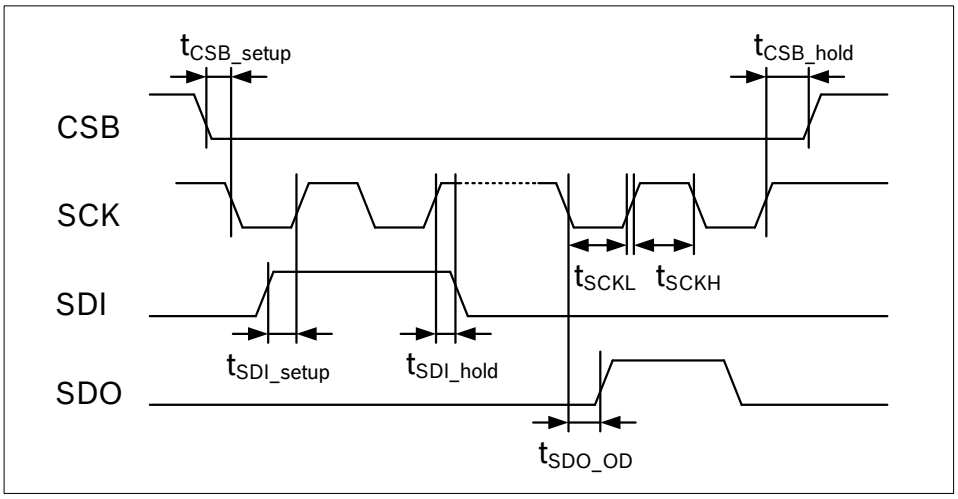

Figure 2: SPI timing diagram

The SPI interface of the BMI085 is compatible with two modes, ´00´ and ´11´. The automatic selection between [CPOL = ´0´ and CPHA = ´0´] and [CPOL = ´1´ and CPHA = ´1´] is controlled based on the value of SCK after a falling edge of CSB (1 or 2).

6.1.1 SPI interface of gyroscope part

For single byte read as well as write operations, 16-bit protocols are used. The SPI interface also supports multiple-byte read operations (burst-read).

The communication starts when the CSB (1 or 2) is pulled low by the SPI master and stops when CSB (1 or 2) is pulled high. SCK is also controlled by SPI master. SDI and SDO (1 or 2) are driven at the falling edge of SCK and should be captured at the rising edge of SCK.

The **data bits** are used as follows:

- Bit #0: Read/Write bit. When 0, the data SDI is written into the chip. When 1, the data SDO from the chip is read.
- Bit #1-7: Address AD(6:0).
- Bit #8-15: when in write mode, these are the data SDI, which will be written into the address. When in read mode, these are the data SDO, which are read from the address.

Multiple read operations (**burst-read**) are possible by keeping CSB low and continuing the data transfer (i.e. continuing to toggle SCK). Only the first register address has to be written. Addresses are automatically incremented after each read access as long as CSB stays active low.

6.1.2 SPI interface of accelerometer part

In case of read operations of the accelerometer part, the requested data is not sent immediately, but instead first a dummy byte is sent, and after this dummy byte the actual reqested register content is transmitted.
This means that – in contrast to the description in section 6.1.1 – a single byte read operation requires to read 2 bytes in burst mode, of which the first received byte can be discarded, while the second byte contains the desired data.
The same applies to burst-read operations. For example, to read the accelerometer values in SPI mode, the user has to read 7 bytes, starting from address 0x12 (ACC data). From these bytes the user must discard the first byte and finds the acceleration information in byte #2 – #7 (corresponding to the content of the addresses 0x12 – 0x17).

The **data bits** are used as follows:

- Bit #0: Read/Write bit. When 0, the data SDI is written into the chip. When 1, the data SDO from the chip is read.
- Bit #1-7: Address AD(6:0).
- Bit #8-15:
  - When in write mode, these are the data SDI, which will be written into the address.
  - When in read mode, these bits contain unpredictable values, and the user has to read Bit #16-23 to get the actual data from the reading address.

6.2 Inter-Integrated Circuit (I²C)

The I²C bus uses SCL (= SCx pin, serial clock) and SDA (= SDx pin, serial data input and output) signal lines. Both lines are connected to VDDIO externally via pull-up resistors so that they are pulled high when the bus is free.

The I²C interface of the BMI085 is compatible with the I²C Specification UM10204 Rev. 03 (19 June 2007), available at http://www.nxp.com. The BMI085 supports I²C standard mode and fast mode, only 7-bit address mode is supported.

The **default I²C addresses** are:

- Accelerometer:
  - SDO1 pin pulled to ‘GND’: 0011000b (0x18)
  - SDO1 pin pulled to ‘VDDIO’: 0011001b (0x19)
- Gyroscope:
  - SDO2 pin pulled to ‘GND’: 1101000b (0x68)
  - SDO2 pin pulled to ‘VDDIO’: 1101001b (0x69)

The timing specification for I²C of the BMI085 is given in table 13:

Table 13: I²C timings

Parameter	Symbol	Min	Max	Units
Clock Frequency	f_{SCL}		400	kHz
SCL Low Period	t_{LOW}	1.3		µs
SCL High Period	t_{HIGH}	0.6		
SDA Setup Time	t_{SUDAT}	0.1		
SDA Hold Time	t_{HDDAT}	0.0		
Setup Time for a repeated Start Condition	t_{SUSTA}	0.6		
Hold Time for a Start Condition	t_{HDSTA}	0.6		
Setup Time for a Stop Condition	t_{SUSTO}	0.6		
Time before a new Transmission can start	t_{BUF}	1.3		
Idle time between write accesses, normal mode	$t_{IDLE_wacc_nm}$	2		µs
Idle time between write accesses, suspend mode	$t_{IDLE_wacc_sum}$	1000		µs

Figure 2 shows the definition of the I²C timings given in table 13:

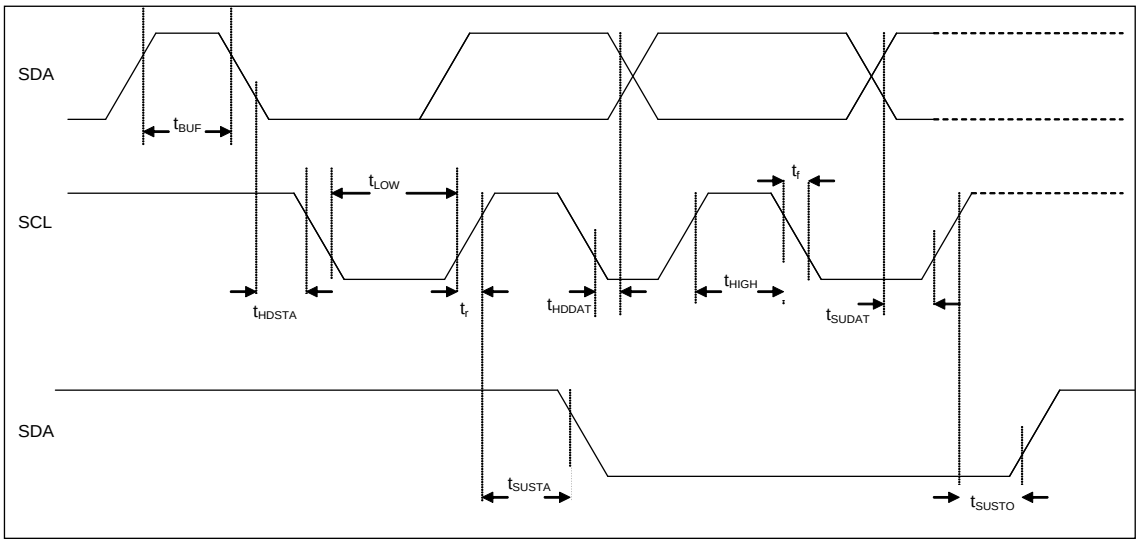

Figure 3: I²C timing diagram

The I²C protocol works as follows:

START: Data transmission on the bus begins with a high to low transition on the SDA line while SCL is held high (start condition (S) indicated by I²C bus master). Once the START signal is transferred by the master, the bus is considered busy.

STOP: Each data transfer should be terminated by a Stop signal (P) generated by master. The STOP condition is a low to HIGH transition on SDA line while SCL is held high.

ACK: Each byte of data transferred must be acknowledged. It is indicated by an acknowledge bit sent by the receiver. The transmitter must release the SDA line (no pull down) during the acknowledge pulse while the receiver must then pull the SDA line low so that it remains stable low during the high period of the acknowledge clock cycle.

In the following diagrams, these abbreviations are used:

S	Start
P	Stop
ACKS	Acknowledge by slave
ACKM	Acknowledge by master
NACKM	Not acknowledge by master
RW	Read / Write

A START immediately followed by a STOP (without SCL toggling from ´VDDIO´ to ´GND´) is not supported. If such a combination occurs, the STOP is not recognized by the device.

I²C write access:
I²C write access can be used to write a data byte in one sequence.

The sequence begins with start condition generated by the master, followed by 7 bits slave address and a write bit (RW = 0). The slave sends an acknowledge bit (ACK = 0) and releases the bus. Then the master sends the one byte register address. The slave again acknowledges the transmission and waits for the 8 bits of data, which shall be written to the specified register address. After the slave acknowledges the data byte, the master generates a stop signal and terminates the writing protocol.

Example of an I²C write access to the accelerometer, writing 0xA8 to address ox40 (i.e. setting continuous filter function, averaging to 4 samples, ODR to 100Hz):

Start	Slave address (0x18)							RW	ACKS	dummy	Register address (0x40)								ACKS	Data (0xA8)								ACKS	Stop
S	0	0	1	1	0	0	0	0	A	0	1	0	0	0	0	0	0	A	1	0	1	0	1	0	0	0	A	P

Figure 4: I²C write

I²C read access:
I²C read access also can be used to read one or multiple data bytes in one sequence.

A read sequence consists of a one-byte I²C write phase followed by the I²C read phase. The two parts of the transmission must be separated by a repeated start condition (Sr). The I²C write phase addresses the slave and sends the register address to be read. After slave acknowledges the transmission, the master generates again a start condition and sends the slave address together with a read bit (RW = 1). Then the master releases the bus and waits for the data bytes to be read out from slave. After each data byte the master has to generate an acknowledge bit (ACK = 0) to enable further data transfer. A NACKM (ACK = 1) from the master stops the data being transferred from the slave. The slave releases the bus so that the master can generate a STOP condition and terminate the transmission.
The register address is automatically incremented and, therefore, more than one byte can be sequentially read out. Once a new data read transmission starts, the start address will be set to the register address specified in the latest I²C write command. By default, the start address is set at 0x00. In this way, repetitive multi-bytes reads from the same starting address are possible.

Example of an I²C read access to the accelerometer, reading all 6 bytes containing acceleration data (0x12-0x17):

Start	Slave address (0x18)							RW	ACKS	dummy	Register address (0x12)							ACKS
S	0	0	1	1	0	0	0	0	A	x	0	0	1	0	0	1	0	A

Start	Slave address (0x18)							RW	ACKS	Read data (0x12)								ACKM	Read data (0x13)								ACKM	
Sr	0	0	1	1	0	0	0	1	A	x	x	x	x	x	x	x	x	A	x	x	x	x	x	x	x	x	A	...

	ACKS	Read data (0x14)								ACKM	Read data (0x15)								ACKM	
...	A	x	x	x	x	x	x	x	x	A	x	x	x	x	x	x	x	x	A	...

	ACKS	Read data (0x16)								ACKM	Read data (0x17)								NACKM	Stop
...	A	x	x	x	x	x	x	x	x	A	x	x	x	x	x	x	x	x	NA	P

Figure 5: I²C multiple read

7. Pin-out and Connection Diagram

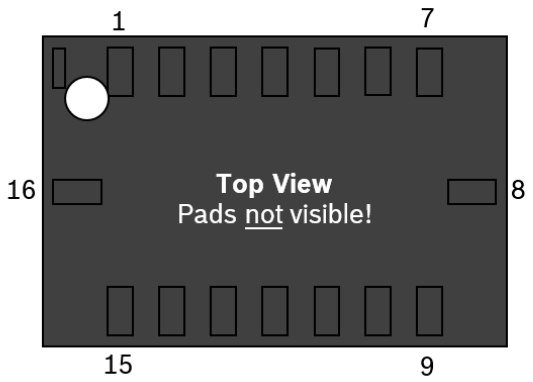

Figure 6: Pin-out top view

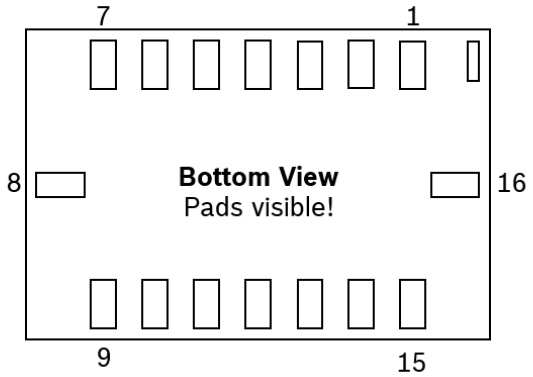

Figure 7: Pin-out bottom view

7.1 Pin-out

Table 14: Pin description

Pin#	Name	I/O Type	Description	SPI mode	I²C mode
1*	INT2	Digital I/O	Interrupt pin 2 (accel int #2)	INT2	INT2
2	NC	--	--	GND	GND
3	VDD	Supply	Power supply analog & digital domain (2.4 – 3.6V)	VDD	VDD
4	GNDA	Ground	Ground for analog domain	GND	GND
5	CSB2	Digital in	SPI Chip select Gyro	CSB2	DNC (float)
6	GNDIO	Ground	Ground for I/O	GND	GND
7	PS	Digital in	Protocol select gyroscope (GND = SPI, VDDIO = I²C)	GND	VDDIO
8	SCL / SCK	Digital in	SPI: serial clock SCK I²C: serial clock SCL	SCK	SCL
9	SDA / SDI	Digital I/O	I²C: SDA serial data I/O SPI 4W: SDI serial data I SPI 3W: SDA serial data I/O	SDI	SDA
10	SDO2	Digital out	SPI Serial data out Gyro Address select in I²C mode see chapter 9.2	SDO2	GND for default addr.
11	VDDIO	Supply	Digital I/O supply voltage (1.2V … 3.6V)	VDDIO	VDDIO
12*	INT3	Digital I/O	Interrupt pin 3 (gyro int #1)	INT3	INT3
13*	INT4	Digital I/O	Interrupt pin 4 (gyro int #2)	INT4	INT4
14	CSB1	Digital in	SPI Chip select Accel	CSB1	VDDIO or DNC (float)
15	SDO1	Digital out	SPI Serial data out Accel Address select in I²C mode see chapter 9.2	SDO1	GND for default addr.
16*	INT1	Digital I/O	Interrupt pin 1 (accel int #1)	INT1	INT1

*** If INT are not used, do not connect them (DNC)!**

7.2 Connection diagram SPI

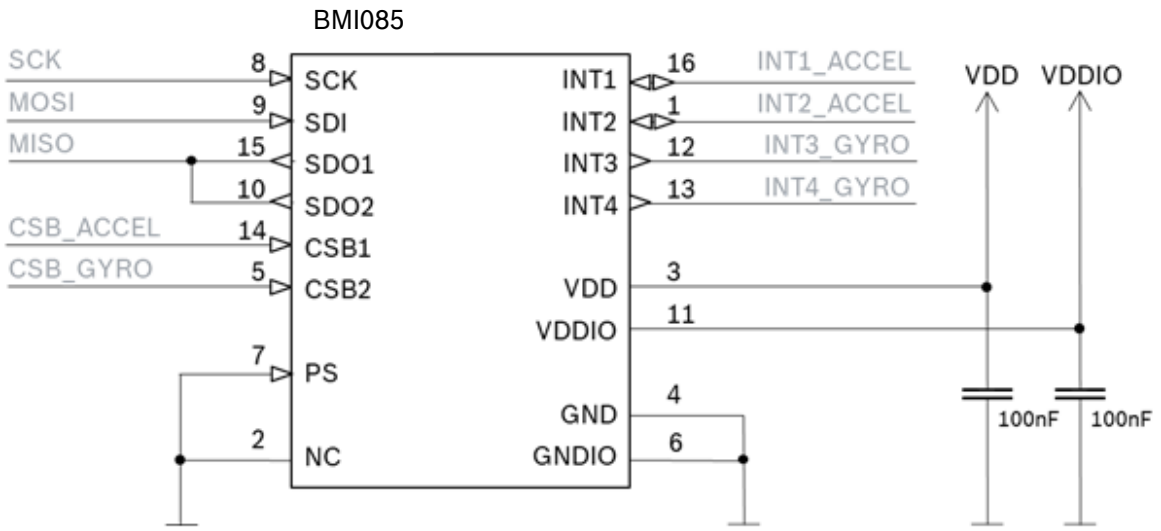

Figure 8: SPI connection

7.3 Connection diagram I²C

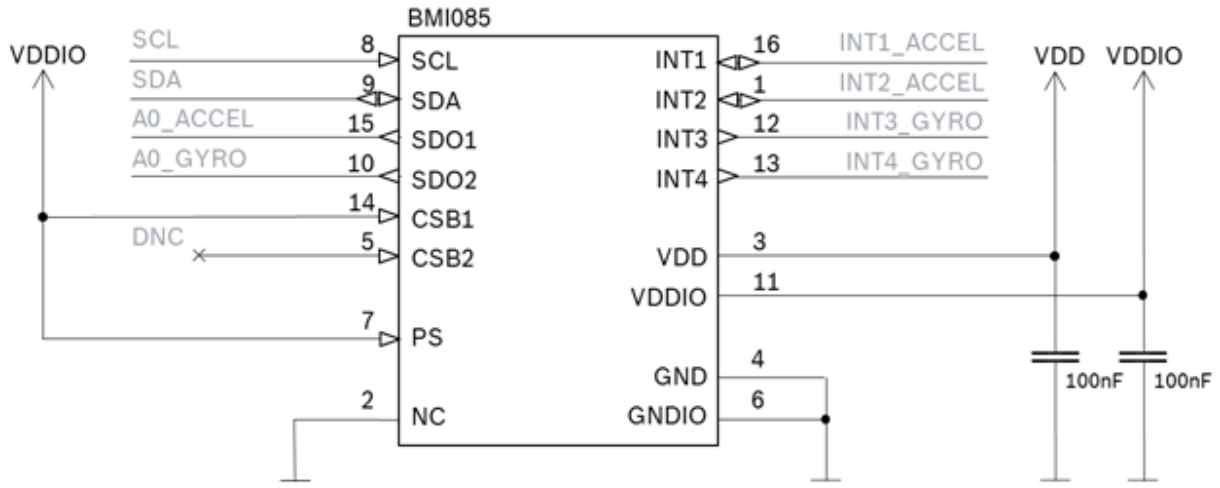

Figure 9: I²C connection

8. Package

8.1 Outline Dimensions

The sensor housing is a standard LGA package. Its dimensions are the following.
Unit is mm. Note: Unless otherwise specified tolerance = decimal ± 0.05

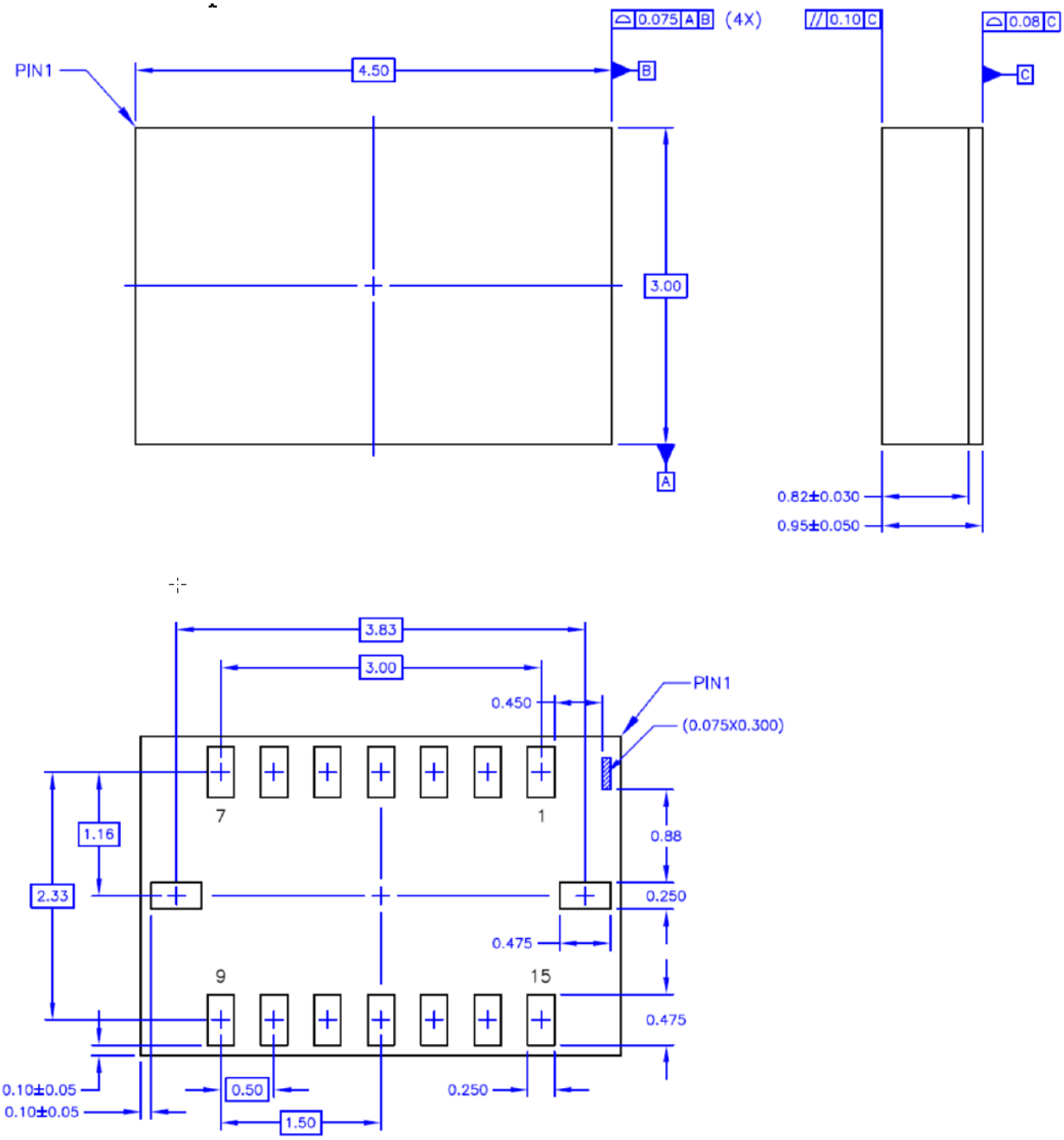

8.2 Sensing axes orientation

If the sensor is accelerated and/or rotated in the indicated directions, the corresponding channels of the device will deliver a positive acceleration and/or yaw rate signal (dynamic acceleration). If the sensor is at rest without any rotation and the force of gravity is acting contrary to the indicated directions, the output of the corresponding acceleration channel will be positive and the corresponding gyroscope channel will be "zero" (static acceleration).

Example: If the sensor is at rest or at uniform motion in a gravity field according to the figure given below, the output signals are:

- 0*g* for the X ACC channel and 0°/sec for the Ω_X GYR channel
- 0*g* for the Y ACC channel and 0°/sec for the Ω_Y GYR channel
- + 1*g* for the Z ACC channel and 0°/sec for the Ω_Z GYR channel

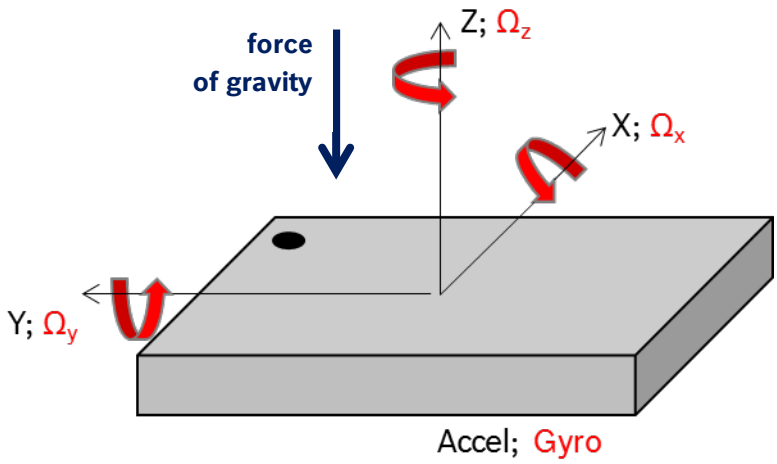

Figure 11: Orientation of sensing axis

The following table lists all corresponding output signals on X, Y, Z while the sensor is at rest or at uniform motion in a gravity field under assumption of a top down gravity vector as shown above.
The gyroscope signals Ω_X, Ω_Y, Ω_Z show 0dps output under these static conditions.

Table 15: Output signals depending on device orientation

Sensor orientation (gravity vector ↓)			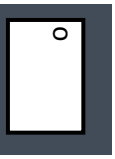			
Output Signal X	0*g*	+1*g*	0*g*	-1*g*	0*g*	0*g*
Output Signal Y	-1*g*	0*g*	+1*g*	0*g*	0*g*	0*g*
Output Signal Z	0*g*	0*g*	0*g*	0*g*	+1*g*	-1*g*

8.3 Marking

8.3.1 Mass production samples

Table 16: Marking of mass production parts

Labeling	Name	Symbol	Remark
● 366 LYYWW CCCC	Product number	366	3 numeric digits, fixed to identify product type
	Sub-con ID	L	1 alphanumeric digit, variable to identify sub-con
	Date-Code	YYWW	4 numeric digits, fixed to identify YY = “year” WW = “working week
	Lot counter	CCCC	4 alphanumeric digits, variable to generate mass production trace-code
	Pin 1 identifier	●	--

8.3.2 Engineering samples

Table 17: Marking of engineering samples

Labeling	Name	Symbol	Remark
● 085N PYYWW CC	Eng. sample ID	N	1 alphanumeric digit, fixed to identify engineering sample, N = “+” or “e” or “E”
	Sample ID	PYYWW	P=Assembly House; YY=year (last 2 digits); WW=Work Week
	Lot Counter ID	CC	e.g. C5 (C-samples, 5th lot)
	Pin 1 identifier	●	--

8.4 PCB layout and soldering guidelines

The following general **layout rules** are recommended

- PCB land width = LGA solder pin width
- PCB land length = LGA solder pin length + 0.1 mm on each side
- Solder mask opening width = PCB land width + 0.05 mm on each side
- Solder mask opening length = PCB land length + 0.05 mm on each side

Recommendation about **stencil design and solder paste application**

- It is recommended to keep the openings of the stencil mask for the signal pads between 70% and 90% of the PCB pad area.
- An accurate alignment of the stencil and the printed circuit board (within 0.025mm) is recommended.
- A stencil thickness of 80 – 150 µm is recommended for screen printing

The **moisture sensitivity level** (MSL) of the BMI085 sensors corresponds to JEDEC Level 1. See also:

- IPC/JEDEC J-STD-020C "Joint Industry Standard: Moisture/Reflow Sensitivity Classification for non-hermetic Solid State Surface Mount Devices"
- IPC/JEDEC J-STD-033A "Joint Industry Standard: Handling, Packing, Shipping and Use of Moisture/Reflow Sensitive Surface Mount Devices"

The sensor fulfils the lead-free soldering requirements of the above-mentioned IPC/JEDEC standard, i.e. reflow soldering with a peak temperature up to 260°C.

For more details, refer the Handling, Soldering and Mounting Instructions document available at https://www.bosch-sensortec.com/bst/support_tools/downloads/overview_downloads

8.5 Handling instructions

Micromechanical sensors are designed to sense acceleration with high accuracy even at low amplitudes and contain highly sensitive structures inside the sensor element. The MEMS sensor can tolerate mechanical shocks up to several thousand g's. However, these limits might be exceeded in conditions with extreme shock loads such as e.g. hammer blow on or next to the sensor, dropping of the sensor onto hard surfaces etc.

We recommend to avoid g-forces beyond the specified limits during transport, handling and mounting of the sensors in a defined and qualified installation process.

This device has built-in protections against high electrostatic discharges or electric fields (e.g. 2kV HBM); however, anti-static precautions should be taken as for any other CMOS component. Unless otherwise specified, proper operation can only occur when all terminal voltages are kept within the supply voltage range. Unused inputs must always be tied to a defined logic voltage level.

8.6 Tape and Reel specification

BMI085 is shipped in a standard cardboard box. The box dimension for each reel is L x W x H = 35cm x 35cm x 5cm. Each reel contains 5,000pcs of BMI085.

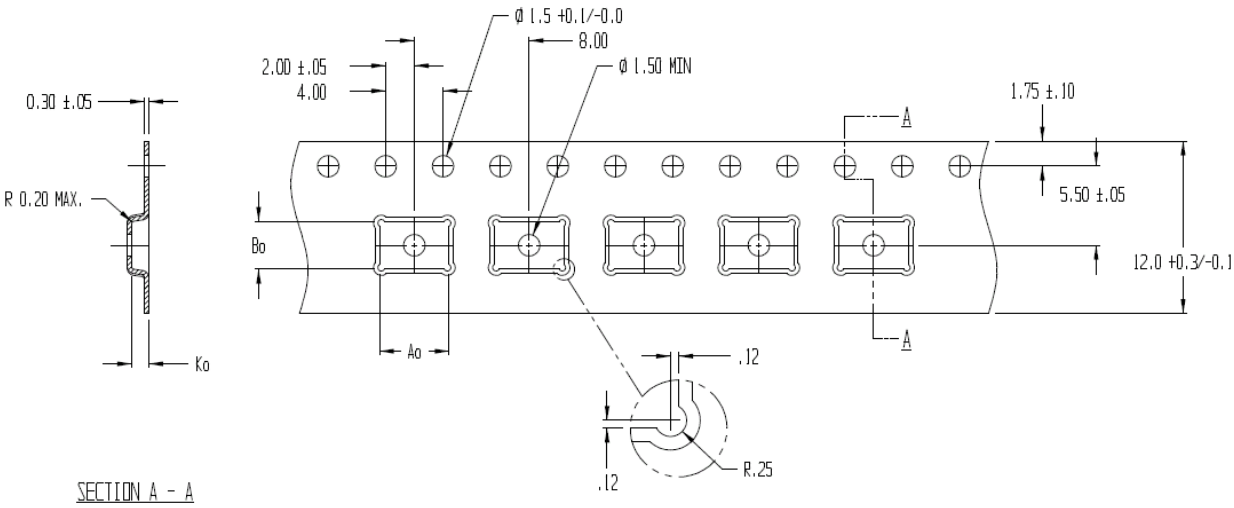

A_0 = 4.85; B_0 = 3.35; K_0 = 1.20

Tape and reel dimensions in mm

8.6.1 Orientation within the reel

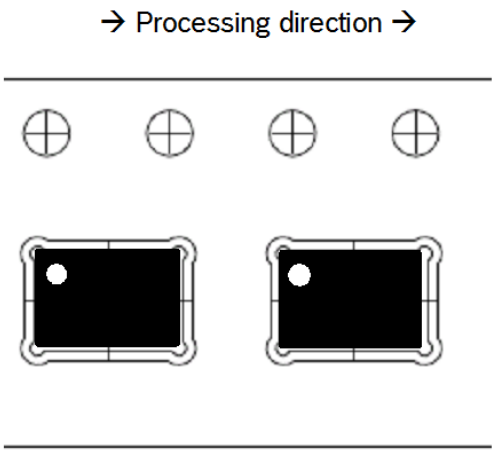

Orientation of the BMI085 devices relative to the tape

8.7 Environmental safety

The BMI085 sensor meets the requirements of the EC restriction of hazardous substances (RoHS) directive, see also:

Directive 2011/65/EU of the European Parliament and of the Council of January 3rd, 2013 on the restriction of the use of certain hazardous substances in electrical and electronic equipment.

8.7.1 Halogen content

The BMI085 is halogen-free. For more details on the analysis results please contact your Bosch Sensortec representative.

9. Legal Disclaimer

9.1 Engineering samples

Engineering Samples are marked with an asterisk (*) or (e). Samples may vary from the valid technical specifications of the product series contained in this data sheet. They are therefore not intended or fit for resale to third parties or for use in end products. Their sole purpose is internal client testing. The testing of an engineering sample may in no way replace the testing of a product series. Bosch Sensortec assumes no liability for the use of engineering samples. The Purchaser shall indemnify Bosch Sensortec from all claims arising from the use of engineering samples.

9.2 Product use

Bosch Sensortec products are developed for the consumer goods industry. They are not designed or approved for use in military applications, life-support appliances, safety-critical automotive applications and devices or systems where malfunctions of these products can reasonably be expected to result in personal injury. They may only be used within the parameters of this product data sheet.

The resale and/or use of products are at the Purchaser's own risk and the Purchaser's own responsibility.

The Purchaser shall indemnify Bosch Sensortec from all third party claims arising from any product use not covered by the parameters of this product data sheet or not approved by Bosch Sensortec and reimburse Bosch Sensortec for all costs in connection with such claims.

The Purchaser accepts the responsibility to monitor the market for the purchased products, particularly with regard to product safety, and inform Bosch Sensortec without delay of any security relevant incidents.

9.3 Application examples and hints

With respect to any examples or hints given herein, any typical values stated herein and/or any information regarding the application of the device, Bosch Sensortec hereby disclaims any and all warranties and liabilities of any kind, including without limitation warranties of non-infringement of intellectual property rights or copyrights of any third party. The information given in this document shall in no event be regarded as a guarantee of conditions or characteristics. They are provided for illustrative purposes only and no evaluation regarding infringement of intellectual property rights or copyrights or regarding functionality, performance or error has been made.

10. Document History and Modification

Rev. No	Chapter	Description of modification/changes	Date
1.0	-	Initial release	03-Dec-2017
1.1	All	Typos	30-Jan-2018
1.2	3 + 4.1.1 5.2 5.3.6 5.2+5.3.10+5.3.11 5.4	Updated switching between power modes Fixed typo in register range Added clearing condition of data ready int bit Corrected INT pin settings bits Fixed typo in bit naming in register 0x16	23-Mar-2018
1.3	7.1	Updated pin 14 assignment in I2C mode	27-Apr-2018
1.4	4.4.1 + 5.2 + 5.3.8 4.9 7.2 + 7.3 7.2 8.3 8.6	Clarified how to set Accel bandwidth setting Included info on FIFO Updated pin 4 and 6 assignment in SPI/I2C mode Clarified connection to SPI host interface Updated marking Included tape & reel specifications	16-Sep-2018

Bosch Sensortec GmbH
Gerhard-Kindler-Straße 9
72770 Reutlingen / Germany

contact@bosch-sensortec.com
www.bosch-sensortec.com

Modifications reserved
Preliminary - specifications subject to change without notice
Document number: BST-BMI085-DS001-14
Revision_1.4_092018

Mouser Electronics

Authorized Distributor

Click to View Pricing, Inventory, Delivery & Lifecycle Information:

Bosch:
BMI085