To our customers,

Old Company Name in Catalogs and Other Documents

On April 1st, 2010, NEC Electronics Corporation merged with Renesas Technology Corporation, and Renesas Electronics Corporation took over all the business of both companies. Therefore, although the old company name remains in this document, it is a valid Renesas Electronics document. We appreciate your understanding.

Renesas Electronics website: http://www.renesas.com

April 1st, 2010
Renesas Electronics Corporation

Issued by: Renesas Electronics Corporation (http://www.renesas.com)

Send any inquiries to http://www.renesas.com/inquiry.

RENESAS

Notice

1. All information included in this document is current as of the date this document is issued. Such information, however, is subject to change without any prior notice. Before purchasing or using any Renesas Electronics products listed herein, please confirm the latest product information with a Renesas Electronics sales office. Also, please pay regular and careful attention to additional and different information to be disclosed by Renesas Electronics such as that disclosed through our website.
2. Renesas Electronics does not assume any liability for infringement of patents, copyrights, or other intellectual property rights of third parties by or arising from the use of Renesas Electronics products or technical information described in this document. No license, express, implied or otherwise, is granted hereby under any patents, copyrights or other intellectual property rights of Renesas Electronics or others.
3. You should not alter, modify, copy, or otherwise misappropriate any Renesas Electronics product, whether in whole or in part.
4. Descriptions of circuits, software and other related information in this document are provided only to illustrate the operation of semiconductor products and application examples. You are fully responsible for the incorporation of these circuits, software, and information in the design of your equipment. Renesas Electronics assumes no responsibility for any losses incurred by you or third parties arising from the use of these circuits, software, or information.
5. When exporting the products or technology described in this document, you should comply with the applicable export control laws and regulations and follow the procedures required by such laws and regulations. You should not use Renesas Electronics products or the technology described in this document for any purpose relating to military applications or use by the military, including but not limited to the development of weapons of mass destruction. Renesas Electronics products and technology may not be used for or incorporated into any products or systems whose manufacture, use, or sale is prohibited under any applicable domestic or foreign laws or regulations.
6. Renesas Electronics has used reasonable care in preparing the information included in this document, but Renesas Electronics does not warrant that such information is error free. Renesas Electronics assumes no liability whatsoever for any damages incurred by you resulting from errors in or omissions from the information included herein.
7. Renesas Electronics products are classified according to the following three quality grades: "Standard", "High Quality", and "Specific". The recommended applications for each Renesas Electronics product depends on the product's quality grade, as indicated below. You must check the quality grade of each Renesas Electronics product before using it in a particular application. You may not use any Renesas Electronics product for any application categorized as "Specific" without the prior written consent of Renesas Electronics. Further, you may not use any Renesas Electronics product for any application for which it is not intended without the prior written consent of Renesas Electronics. Renesas Electronics shall not be in any way liable for any damages or losses incurred by you or third parties arising from the use of any Renesas Electronics product for an application categorized as "Specific" or for which the product is not intended where you have failed to obtain the prior written consent of Renesas Electronics. The quality grade of each Renesas Electronics product is "Standard" unless otherwise expressly specified in a Renesas Electronics data sheets or data books, etc.

   "Standard": Computers; office equipment; communications equipment; test and measurement equipment; audio and visual equipment; home electronic appliances; machine tools; personal electronic equipment; and industrial robots.

   "High Quality": Transportation equipment (automobiles, trains, ships, etc.); traffic control systems; anti-disaster systems; anti-crime systems; safety equipment; and medical equipment not specifically designed for life support.

   "Specific": Aircraft; aerospace equipment; submersible repeaters; nuclear reactor control systems; medical equipment or systems for life support (e.g. artificial life support devices or systems), surgical implantations, or healthcare intervention (e.g. excision, etc.), and any other applications or purposes that pose a direct threat to human life.
8. You should use the Renesas Electronics products described in this document within the range specified by Renesas Electronics, especially with respect to the maximum rating, operating supply voltage range, movement power voltage range, heat radiation characteristics, installation and other product characteristics. Renesas Electronics shall have no liability for malfunctions or damages arising out of the use of Renesas Electronics products beyond such specified ranges.
9. Although Renesas Electronics endeavors to improve the quality and reliability of its products, semiconductor products have specific characteristics such as the occurrence of failure at a certain rate and malfunctions under certain use conditions. Further, Renesas Electronics products are not subject to radiation resistance design. Please be sure to implement safety measures to guard them against the possibility of physical injury, and injury or damage caused by fire in the event of the failure of a Renesas Electronics product, such as safety design for hardware and software including but not limited to redundancy, fire control and malfunction prevention, appropriate treatment for aging degradation or any other appropriate measures. Because the evaluation of microcomputer software alone is very difficult, please evaluate the safety of the final products or system manufactured by you.
10. Please contact a Renesas Electronics sales office for details as to environmental matters such as the environmental compatibility of each Renesas Electronics product. Please use Renesas Electronics products in compliance with all applicable laws and regulations that regulate the inclusion or use of controlled substances, including without limitation, the EU RoHS Directive. Renesas Electronics assumes no liability for damages or losses occurring as a result of your noncompliance with applicable laws and regulations.
11. This document may not be reproduced or duplicated, in any form, in whole or in part, without prior written consent of Renesas Electronics.
12. Please contact a Renesas Electronics sales office if you have any questions regarding the information contained in this document or Renesas Electronics products, or if you have any other inquiries.

(Note 1) "Renesas Electronics" as used in this document means Renesas Electronics Corporation and also includes its majority-owned subsidiaries.

(Note 2) "Renesas Electronics product(s)" means any product developed or manufactured by or for Renesas Electronics.

Hardware Manual

16

R8C/14 Group, R8C/15 Group

Hardware Manual

RENESAS 16-BIT SINGLE-CHIP MICROCOMPUTER
M16C FAMILY / R8C/Tiny SERIES

All information contained in these materials, including products and product specifications, represents information on the product at the time of publication and is subject to change by Renesas Technology Corp. without notice. Please review the latest information published by Renesas Technology Corp. through various means, including the Renesas Technology Corp. website (http://www.renesas.com).

Renesas Electronics
www.renesas.com

Rev.2.10 2006.01.

Keep safety first in your circuit designs!

1. Renesas Technology Corp. puts the maximum effort into making semiconductor products better and more reliable, but there is always the possibility that trouble may occur with them. Trouble with semiconductors may lead to personal injury, fire or property damage. Remember to give due consideration to safety when making your circuit designs, with appropriate measures such as (i) placement of substitutive, auxiliary circuits, (ii) use of non-flammable material or (iii) prevention against any malfunction or mishap.

Notes regarding these materials

1. These materials are intended as a reference to assist our customers in the selection of the Renesas Technology Corp. product best suited to the customer's application; they do not convey any license under any intellectual property rights, or any other rights, belonging to Renesas Technology Corp. or a third party.
2. Renesas Technology Corp. assumes no responsibility for any damage, or infringement of any third-party's rights, originating in the use of any product data, diagrams, charts, programs, algorithms, or circuit application examples contained in these materials.
3. All information contained in these materials, including product data, diagrams, charts, programs and algorithms represents information on products at the time of publication of these materials, and are subject to change by Renesas Technology Corp. without notice due to product improvements or other reasons. It is therefore recommended that customers contact Renesas Technology Corp. or an authorized Renesas Technology Corp. product distributor for the latest product information before purchasing a product listed herein.
   The information described here may contain technical inaccuracies or typographical errors. Renesas Technology Corp. assumes no responsibility for any damage, liability, or other loss rising from these inaccuracies or errors.
   Please also pay attention to information published by Renesas Technology Corp. by various means, including the Renesas Technology Corp. Semiconductor home page (http://www.renesas.com).
4. When using any or all of the information contained in these materials, including product data, diagrams, charts, programs, and algorithms, please be sure to evaluate all information as a total system before making a final decision on the applicability of the information and products. Renesas Technology Corp. assumes no responsibility for any damage, liability or other loss resulting from the information contained herein.
5. Renesas Technology Corp. semiconductors are not designed or manufactured for use in a device or system that is used under circumstances in which human life is potentially at stake. Please contact Renesas Technology Corp. or an authorized Renesas Technology Corp. product distributor when considering the use of a product contained herein for any specific purposes, such as apparatus or systems for transportation, vehicular, medical, aerospace, nuclear, or undersea repeater use.
6. The prior written approval of Renesas Technology Corp. is necessary to reprint or reproduce in whole or in part these materials.
7. If these products or technologies are subject to the Japanese export control restrictions, they must be exported under a license from the Japanese government and cannot be imported into a country other than the approved destination.
   Any diversion or reexport contrary to the export control laws and regulations of Japan and/or the country of destination is prohibited.
8. Please contact Renesas Technology Corp. for further details on these materials or the products contained therein.

How to Use This Manual

1. Introduction

This hardware manual provides detailed information on the R8C/14 Group, R8C/15 Group of microcomputers.
Users are expected to have basic knowledge of electric circuits, logical circuits and microcomputers.

2. Register Diagram

The symbols, and descriptions, used for bit function in each register are shown below.

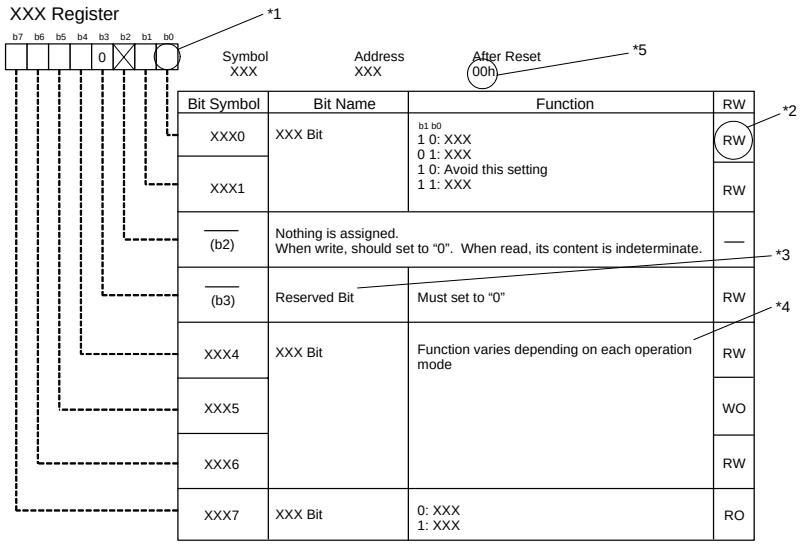

*1
Blank:Set to "0" or "1" according to the application
0: Set to "0"
1: Set to "1"
X: Nothing is assigned

*2
RW: Read and write
RO: Read only
WO: Write only
–: Nothing is assigned

*3
•Reserved bit
Reserved bit. Set to specified value.

*4
•Nothing is assigned
Nothing is assigned to the bit concerned. As the bit may be use for future functions, set to "0" when writing to this bit.
•Do not set to this value
The operation is not guaranteed when a value is set.
•Function varies depending on mode of operation
Bit function varies depending on peripheral function mode.
Refer to respective register for each mode.

*5
Follow the text in each manual for binary and hexadecimal notations.

3. M16C Family Documents

The following documents were prepared for the M16C family.(1)

Document	Contents
Short Sheet	Hardware overview
Data Sheet	Hardware overview and electrical characteristics
Hardware Manual	Hardware specifications (pin assignments, memory maps, peripheral specifications, electrical characteristics, timing charts). *Refer to the application note for how to use peripheral functions.
Software Manual	Detailed description of assembly instructions and microcomputer performance of each instruction
Application Note	• Usage and application examples of peripheral functions • Sample programs • Introduction to the basic functions in the M16C family • Programming method with Assembly and C languages
RENESAS TECHNICAL UPDATE	Preliminary report about the specification of a product, a document, etc.

NOTES:

1. Before using this material, please visit the our website to verify that this is the most updated document available.

Table of Contents

SFR Page Reference B - 1

1. Overview 1

1.1 Applications 1
1.2 Performance Overview 2
1.3 Block Diagram 4
1.4 Product Information 5
1.5 Pin Assignments 7
1.6 Pin Description 8

2. Central Processing Unit (CPU) 10

2.1 Data Registers (R0, R1, R2 and R3) 11
2.2 Address Registers (A0 and A1) 11
2.3 Frame Base Register (FB) 11
2.4 Interrupt Table Register (INTB) 11
2.5 Program Counter (PC) 11
2.6 User Stack Pointer (USP) and Interrupt Stack Pointer (ISP) 11
2.7 Static Base Register (SB) 11
2.8 Flag Register (FLG) 11
2.8.1 Carry Flag (C) 11
2.8.2 Debug Flag (D) 11
2.8.3 Zero Flag (Z) 11
2.8.4 Sign Flag (S) 11
2.8.5 Register Bank Select Flag (B) 11
2.8.6 Overflow Flag (O) 11
2.8.7 Interrupt Enable Flag (I Flag) 12
2.8.8 Stack Pointer Select Flag (U Flag) 12
2.8.9 Processor Interrupt Priority Level (IPL) 12
2.8.10 Reserved Bit 12

3. Memory 13

3.1 R8C/14 Group 13
3.2 R8C/15 Group 14

4. Special Function Register (SFR) 15

5. Reset 19

5.1 Hardware Reset 21

5.1.1 When the power supply is stable 21

5.1.2 Power on 21

5.2 Power-On Reset Function 23

5.3 Voltage Monitor 1 Reset 24

5.4 Voltage Monitor 2 Reset 24

5.5 Watchdog Timer Reset 24

5.6 Software Reset 24

6. Voltage Detection Circuit 25

6.1 Monitoring VCC Input Voltage 31

6.1.1 Monitoring Vdet1 31

6.1.2 Monitoring Vdet2 31

6.2 Voltage Monitor 1 Reset 32

6.3 Voltage Monitor 2 Interrupt and Voltage Monitor 2 Reset 33

7. Processor Mode 35

7.1 Types of Processor Mode 35

8. Bus 37

9. Clock Generation Circuit 38

9.1 Main Clock 45

9.2 On-Chip Oscillator Clock 46

9.2.1 Low-Speed On-Chip Oscillator Clock 46

9.2.2 High-Speed On-Chip Oscillator Clock 46

9.3 CPU Clock and Peripheral Function Clock 47

9.3.1 System Clock 47

9.3.2 CPU Clock 47

9.3.3 Peripheral Function Clock (f1, f2, f4, f8, f32) 47

9.3.4 fRING and fRING128 47

9.3.5 fRING-fast 47

9.3.6 fRING-S 47

9.4 Power Control 48

9.4.1 Normal Operating Mode 48
9.4.2 Wait Mode 49
9.4.3 Stop Mode 51
9.5 Oscillation Stop Detection Function 53
9.5.1 How to Use Oscillation Stop Detection Function 53

10. Protection 55

11. Interrupt 56
11.1 Interrupt Overview 56
11.1.1 Types of Interrupts 56
11.1.2 Software Interrupts 57
11.1.3 Special Interrupts 58
11.1.4 Peripheral Function Interrupt 58
11.1.5 Interrupts and Interrupt Vector 59
11.1.6 Interrupt Control 61
11.2 $\overline{\text{INT}}$ Interrupt 69
11.2.1 $\overline{\text{INT0}}$ Interrupt 69
11.2.2 $\overline{\text{INT0}}$ Input Filter 70
11.2.3 $\overline{\text{INT1}}$ Interrupt 71
11.2.4 $\overline{\text{INT3}}$ Interrupt 72
11.3 Key Input Interrupt 74
11.4 Address Match Interrupt 76

12. Watchdog Timer 78
12.1 When Count Source Protection Mode Disabled 81
12.2 When Count Source Protection Mode Enabled 82

13. Timers 83
13.1 Timer X 84
13.1.1 Timer Mode 87
13.1.2 Pulse Output Mode 88
13.1.3 Event Counter Mode 90
13.1.4 Pulse Width Measurement Mode 92
13.1.5 Pulse Period Measurement Mode 95
13.2 Timer Z 98
13.2.1 Timer Mode 103

13.2.2 Programmable Waveform Generation Mode 105
13.2.3 Programmable One-shot Generation Mode 108
13.2.4 Programmable Wait One-shot Generation Mode 111
13.3 Timer C 115
13.3.1 Input Capture Mode 121
13.3.2 Output Compare Mode 123

14. Serial Interface 125
14.1 Clock Synchronous Serial I/O Mode 130
14.1.1 Polarity Select Function 133
14.1.2 LSB First/MSB First Select Function 133
14.1.3 Continuous Receive Mode 134
14.2 Clock Asynchronous Serial I/O (UART) Mode 135
14.2.1 CNTR0 Pin Select Function 138
14.2.2 Bit Rate 139

15. Clock Synchronous Serial I/O with Chip Select (SSU) 140
15.1 Transfer Clock 149
15.1.1 Association between Transfer Clock Polarity, Phase and Data 149
15.2 SS Shift Register (SSTRSR) 151
15.2.1 Association between Data I/O Pin and SS Shift Register 151
15.3 Interrupt Requests 152
15.4 Communication Modes and Pin Functions 153
15.5 Clock Synchronous Communication Mode 154
15.5.1 Initialization in Clock Synchronous Communication Mode 154
15.5.2 Data Transmit 155
15.5.3 Data Receive 157
15.5.4 Data Transmit/Receive 159
15.6 Operation in 4-Wire Bus Communication Mode 161
15.6.1 Initialization in 4-Wire Bus Communication Mode 161
15.6.2 Data Transmit 163
15.6.3 Data Receive 165
15.6.4 $\overline{\text{SCS}}$ Pin Control and Arbitration 167

16. A/D Converter 168
16.1 One-Shot Mode 172

16.2 Repeat Mode 174
16.3 Sample and Hold 176
16.4 A/D Conversion Cycles 176
16.5 Internal Equivalent Circuit of Analog Input 177
16.6 Inflow Current Bypass Circuit 178

17. Programmable I/O Ports 179

17.1 Functions of Programmable I/O Ports 179
17.2 Effect on Peripheral Functions 179
17.3 Pins Other than Programmable I/O Ports 179
17.4 Port setting 186
17.5 Unassigned Pin Handling 190

18. Flash Memory Version 191

18.1 Overview 191
18.2 Memory Map 193
18.3 Functions To Prevent Flash Memory from Rewriting 195
18.3.1 ID Code Check Function 195
18.3.2 ROM Code Protect Function 196
18.4 CPU Rewrite Mode 197
18.4.1 EW0 Mode 198
18.4.2 EW1 Mode 198
18.4.3 Software Commands 205
18.4.4 Status Register 209
18.4.5 Full Status Check 210
18.5 Standard Serial I/O Mode 212
18.5.1 ID Code Check Function 212
18.6 Parallel I/O Mode 216
18.6.1 ROM Code Protect Function 216

19. Electrical Characteristics 217

20. Precautions 235

20.1 Stop Mode and Wait Mode 235
20.1.1 Stop Mode 235
20.1.2 Wait Mode 235
20.2 Interrupts 236

20.2.1 Reading Address 00000h 236
20.2.2 SP Setting 236
20.2.3 External Interrupt and Key Input Interrupt 236
20.2.4 Watchdog Timer Interrupt 236
20.2.5 Changing Interrupt Factor 237
20.2.6 Changing Interrupt Control Register 238
20.3 Clock Generation Circuit 239
20.3.1 Oscillation Stop Detection Function 239
20.3.2 Oscillation Circuit Constants 239
20.4 Timers 240
20.4.1 Timers X and Z 240
20.4.2 Timer X 240
20.4.3 Timer Z 241
20.4.4 Timer C 241
20.5 Serial Interface 242
20.6 Clock Synchronous Serial I/O (SSU) with Chip Select 243
20.6.1 Access Registers Associated with SSU 243
20.7 A/D Converter 244
20.8 Flash Memory Version 245
20.8.1 CPU Rewrite Mode 245
20.9 Noise 248
20.9.1 Insert a bypass capacitor between VCC and VSS pins as the countermeasures against noise and latch-up 248
20.9.2 Countermeasures against Noise Error of Port Control Registers 248

21. Precaution for On-chip Debugger 249

Appendix 1. Package Dimensions 250

Appendix 2. Connecting Example between Serial Writer and On-Chip Debugging Emulator 251

Appendix 3. Example of Oscillation Evaluation Circuit 252

Register Index 253

SFR Page Reference

Address	Register	Symbol	Page
0000h			
0001h			
0002h			
0003h			
0004h	Processor Mode Register 0	PM0	35
0005h	Processor Mode Register 1	PM1	36
0006h	System Clock Control Register 0	CM0	40
0007h	System Clock Control Register 1	CM1	41
0008h			
0009h	Address Match Interrupt Enable Register	AIER	77
000Ah	Protect Register	PRCR	55
000Bh			
000Ch	Oscillation Stop Detection Register	OCD	42
000Dh	Watchdog Timer Reset Register	WDTR	80
000Eh	Watchdog Timer Start Register	WDTS	80
000Fh	Watchdog Timer Control Register	WDC	79
0010h	Address Match Interrupt Register 0	RMAD0	77
0011h			
0012h			
0013h			
0014h	Address Match Interrupt Register 1	RMAD1	77
0015h			
0016h			
0017h			
0018h			
0019h			
001Ah			
001Bh			
001Ch	Count Source Protection Mode Register	CSPR	80
001Dh			
001Eh	$\overline{\text{INT0}}$ Input Filter Select Register	INT0F	69
001Fh			
0020h	High-Speed On-Chip Oscillator Control Register 0	HRA0	43
0021h	High-Speed On-Chip Oscillator Control Register 1	HRA1	44
0022h	High-Speed On-Chip Oscillator Control Register 2	HRA2	44
0023h			
0024h			
0025h			
0026h			
0027h			
0028h			
0029h			
002Ah			
002Bh			
002Ch			
002Dh			
002Eh			
002Fh			
0030h			
0031h	Voltage Detection Register 1	VCA1	28
0032h	Voltage Detection Register 2	VCA2	28
0033h			
0034h			
0035h			
0036h	Voltage Monitor 1 Circuit Control Register	VW1C	29
0037h	Voltage Monitor 2 Circuit Control Register	VW2C	30
0038h			
0039h			
003Ah			
003Bh			
003Ch			
003Dh			
003Eh			
003Fh			

Address	Register	Symbol	Page
0040h			
0041h			
0042h			
0043h			
0044h			
0045h			
0046h			
0047h			
0048h			
0049h			
004Ah			
004Bh			
004Ch			
004Dh	Key Input Interrupt Control Register	KUPIC	61
004Eh	A/D Conversion Interrupt Control Register	ADIC	61
004Fh	SSU Interrupt Control Register	SSUAIC	61
0050h	Compare 1 Interrupt Control Register	CMP1IC	61
0051h	UART0 Transmit Interrupt Control Register	S0TIC	61
0052h	UART0 Receive Interrupt Control Register	S0RIC	61
0053h			
0054h			
0055h			
0056h	Timer X Interrupt Control Register	TXIC	61
0057h			
0058h	Timer Z Interrupt Control Register	TZIC	61
0059h	$\overline{\text{INT1}}$ Interrupt Control Register	INT1IC	61
005Ah	$\overline{\text{INT3}}$ Interrupt Control Register	INT3IC	61
005Bh	Timer C Interrupt Control Register	TCIC	61
005Ch	Compare 0 Interrupt Control Register	CMP0IC	61
005Dh	$\overline{\text{INT0}}$ Interrupt Control Register	INT0IC	62
005Eh			
005Fh			
0060h			
0061h			
0062h			
0063h			
0064h			
0065h			
0066h			
0067h			
0068h			
0069h			
006Ah			
006Bh			
006Ch			
006Dh			
006Eh			
006Fh			
0070h			
0071h			
0072h			
0073h			
0074h			
0075h			
0076h			
0077h			
0078h			
0079h			
007Ah			
007Bh			
007Ch			
007Dh			
007Eh			
007Fh			

NOTES:

1. Blank columns are all reserved space. No access is allowed.

Address	Register	Symbol	Page
0080h	Timer Z Mode Register	TZMR	99
0081h			
0082h			
0083h			
0084h	Timer Z Waveform Output Control Register	PUM	101
0085h	Prescaler Z	PREZ	100
0086h	Timer Z Secondary	TZSC	100
0087h	Timer Z Primary	TZPR	100
0088h			
0089h			
008Ah	Timer Z Output Control Register	TZOC	101
008Bh	Timer X Mode Register	TXMR	85
008Ch	Prescaler X	PREX	86
008Dh	Timer X	TX	86
008Eh	Timer Count Source Set Register	TCSS	86,102
008Fh			
0090h	Timer C	TC	117
0091h			
0092h			
0093h			
0094h			
0095h			
0096h	External Input Enable Register	INTEN	69
0097h			
0098h	Key Input Enable Register	KIEN	75
0099h			
009Ah	Timer C Control Register 0	TCC0	118
009Bh	Timer C Control Register 1	TCC1	119
009Ch	Capture, Compare 0 Register	TM0	117
009Dh			
009Eh	Compare 1 Register	TM1	117
009Fh			
00A0h	UART0 Transmit/Receive Mode Register	U0MR	128
00A1h	UART0 Bit Rate Register	U0BRG	127
00A2h	UART0 Transmit Buffer Register	U0TB	127
00A3h			
00A4h	UART0 Transmit/Receive Control Register 0	U0C0	128
00A5h	UART0 Transmit/Receive Control Register 1	U0C1	129
00A6h	UART0 Receive Buffer Register	U0RB	127
00A7h			
00A8h			
00A9h			
00AAh			
00ABh			
00ACh			
00ADh			
00AEh			
00AFh			
00B0h	UART Transmit/Receive Control Register 2	UCON	129
00B1h			
00B2h			
00B3h			
00B4h			
00B5h			
00B6h			
00B7h			
00B8h	SS Control Register H	SSCRH	142
00B9h	SS Control Register L	SSCRL	143
00BAh	SS Mode Register	SSMR	144
00BBh	SS Enable Register	SSER	145
00BCh	SS Status Register	SSSR	146
00BDh	SS Mode Register 2	SSMR2	147
00BEh	SS Transmit Data Register	SSTDR	148
00BFh	SS Receive Data Register	SSRDR	148

NOTES:

1. Blank columns, 0100h to 01AFh and 01C0h to 02FFh are all reserved. No access is allowed.

Address	Register	Symbol	Page
00C0h	A/D Register	AD	171
00C1h			
00C2h			
00C3h			
00C4h			
00C5h			
00C6h			
00C7h			
00C8h			
00C9h			
00CAh			
00CBh			
00CCh			
00CDh			
00CEh			
00CFh			
00D0h			
00D1h			
00D2h			
00D3h			
00D4h	A/D Control Register 2	ADCON2	171
00D5h			
00D6h	A/D Control Register 0	ADCON0	170
00D7h	A/D Control Register 1	ADCON1	170
00D8h			
00D9h			
00DAh			
00DBh			
00DCh			
00DDh			
00DEh			
00DFh			
00E0h			
00E1h	Port P1 Register	P1	184
00E2h			
00E3h	Port P1 Direction Register	PD1	184
00E4h			
00E5h	Port P3 Register	P3	184
00E6h			
00E7h	Port P3 Direction Register	PD3	184
00E8h	Port P4 Register	P4	184
00E9h			
00EAh	Port P4 Direction Register	PD4	184
00EBh			
00ECh			
00EDh			
00EEh			
00EFh			
00F0h			
00F1h			
00F2h			
00F3h			
00F4h			
00F5h			
00F6h			
00F7h			
00F8h			
00F9h			
00FAh			
00FBh			
00FCh	Pull-Up Control Register 0	PUR0	185
00FDh	Pull-Up Control Register 1	PUR1	185
00FEh	Port P1 Drive Capacity Control Register	DRR	185
00FFh	Timer C Output Control Register	TCOUT	120
01B3h	Flash Memory Control Register 4	FMR4	201
01B4h			
01B5h	Flash Memory Control Register 1	FMR1	201
01B6h			
01B7h	Flash Memory Control Register 0	FMR0	200

0FFFFh	Optional Function Select Register	OFS	79,196

1. Overview

This MCU is built using the high-performance silicon gate CMOS process using a R8C/Tiny Series CPU core and is packaged in a 20-pin plastic molded LSSOP. This MCU operates using sophisticated instructions featuring a high level of instruction efficiency. With 1 Mbyte of address space, it is capable of executing instructions at high speed.
Furthermore, the data flash ROM (1KB × 2blocks) is embedded in the R8C/15 group.
The difference between R8C/14 and R8C/15 groups is only the existence of the data flash ROM. Their peripheral functions are the same.

1.1 Applications

Electric household appliance, office equipment, housing equipment (sensor, security), general industrial equipment, audio, etc.

1.2 Performance Overview

Table 1.1 lists the Performance Outline of the R8C/14 Group and Table 1.2 lists the Performance Outline of the R8C/15 Group.

Table 1.1 Performance Outline of the R8C/14 Group

Item		Performance
CPU	Number of Basic Instructions	89 instructions
	Minimum Instruction Execution Time	50ns(f(XIN)=20MHz, VCC=3.0 to 5.5V) 100ns(f(XIN)=10MHz, VCC=2.7 to 5.5V)
	Operating Mode	Single-chip
	Memory Space	1 Mbyte
	Memory Capacity	See **Table 1.3 R8C/14 Group Product Information**
Peripheral Function	Port	I/O port : 13 pins (including LED drive port), Input : 2 pins
	LED Drive Port	I/O port: 4 pins
	Timer	Timer X: 8 bits × 1 channel, Timer Z: 8 bits × 1 channel (Each timer equipped with 8-bit prescaler) Timer C: 16 bits × 1 channel (Circuits of input capture and output compare)
	Serial Interface	1 channel Clock synchronous serial I/O, UART
	Chip-Select Clock Synchronous Serial I/O (SSU)	1 channel
	A/D Converter	10-bit A/D converter: 1 circuit, 4 channels
	Watchdog Timer	15 bits ×1 channel (with prescaler) Reset start selectable, Count source protection mode
	Interrupt	Internal: 9 factors, External: 4 factors, Software: 4 factors, Priority level: 7 levels
	Clock Generation Circuit	2 circuits • Main clock oscillation circuit (Equipped with a built-in feedback resistor) • On-chip oscillator (high speed, low speed) Equipped with frequency adjustment function on high-speed on-chip oscillator
	Oscillation Stop Detection Function	Main clock oscillation stop detection function
	Voltage Detection Circuit	Included
	Power-On Reset Circuit	Included
Electric Characteristics	Supply Voltage	VCC=3.0 to 5.5V (f(XIN)=20MHz) VCC=2.7 to 5.5V (f(XIN)=10MHz)
	Power Consumption	Typ. 9mA (VCC=5.0V, f(XIN)=20MHz) Typ. 5mA (VCC=3.0V, f(XIN)=10MHz) Typ. 35μA (VCC=3.0V, wait mode, peripheral clock off) Typ. 0.7μA (VCC=3.0V, stop mode)
Flash Memory	Program/Erase Supply Voltage	VCC=2.7 to 5.5V
	Program/Erase Endurance	100 times
Operating Ambient Temperature		-20 to 85°C -40 to 85°C (D Version)
Package		20-pin plastic mold LSSOP

Table 1.2 Performance Outline of the R8C/15 Group

Item		Performance
CPU	Number of Basic Instructions	89 instructions
	Minimum Instruction Execution Time	50ns (f(XIN)=20MHz, VCC=3.0 to 5.5V) 100ns (f(XIN)=10MHz, VCC=2.7 to 5.5V)
	Operating Mode	Single-chip
	Memory Space	1 Mbyte
	Memory Capacity	See **Table 1.4 R8C/15 Group Product Information**
Peripheral Function	Port	I/O : 13 pins (including LED drive port), Input : 2 pins
	LED drive port	I/O port: 4 pins
	Timer	Timer X: 8 bits × 1 channel, Timer Z: 8 bits × 1 channel (Each timer equipped with 8-bit prescaler) Timer C: 16 bits × 1 channel (Circuits of input capture and output compare)
	Serial Interface	1 channel Clock synchronous serial I/O, UART
	Chip-select clock synchronous serial I/O (SSU)	1 channel
	A/D Converter	10-bit A/D converter: 1 circuit, 4 channels
	Watchdog Timer	15 bits × 1 channel (with prescaler) Reset start selectable, Count source protection mode
	Interrupt	Internal: 9 factors, External: 4 factors, Software: 4 factors Priority level: 7 levels
	Clock Generation Circuit	2 circuits • Main clock generation circuit (Equipped with a built-in feedback resistor) • On-chip oscillator (high speed, low speed) Equipped with frequency adjustment function on high-speed on-chip oscillator
	Oscillation Stop Detection Function	Main clock oscillation stop detection function
	Voltage Detection Circuit	Included
	Power on Reset Circuit	Included
Electric Characteristics	Supply Voltage	VCC=3.0 to 5.5V (f(XIN)=20MHz) VCC=2.7 to 5.5V (f(XIN)=10MHz)
	Power Consumption	Typ. 9mA (VCC=5.0V, f(XIN)=20MHz) Typ. 5mA (VCC=3.0V, f(XIN)=10MHz) Typ. 35μA (VCC=3.0V, wait mode, peripheral clock off) Typ. 0.7μA (VCC=3.0V, stop mode)
Flash Memory	Program/Erase Supply Voltage	VCC=2.7 to 5.5V
	Program/Erase Endurance	10,000 times (Data flash)
		1,000 times (Program ROM)
Operating Ambient Temperature		-20 to 85°C -40 to 85°C (D Version)
Package		20-pin plastic mold LSSOP

1.3 Block Diagram

Figure 1.1 shows a Block Diagram.

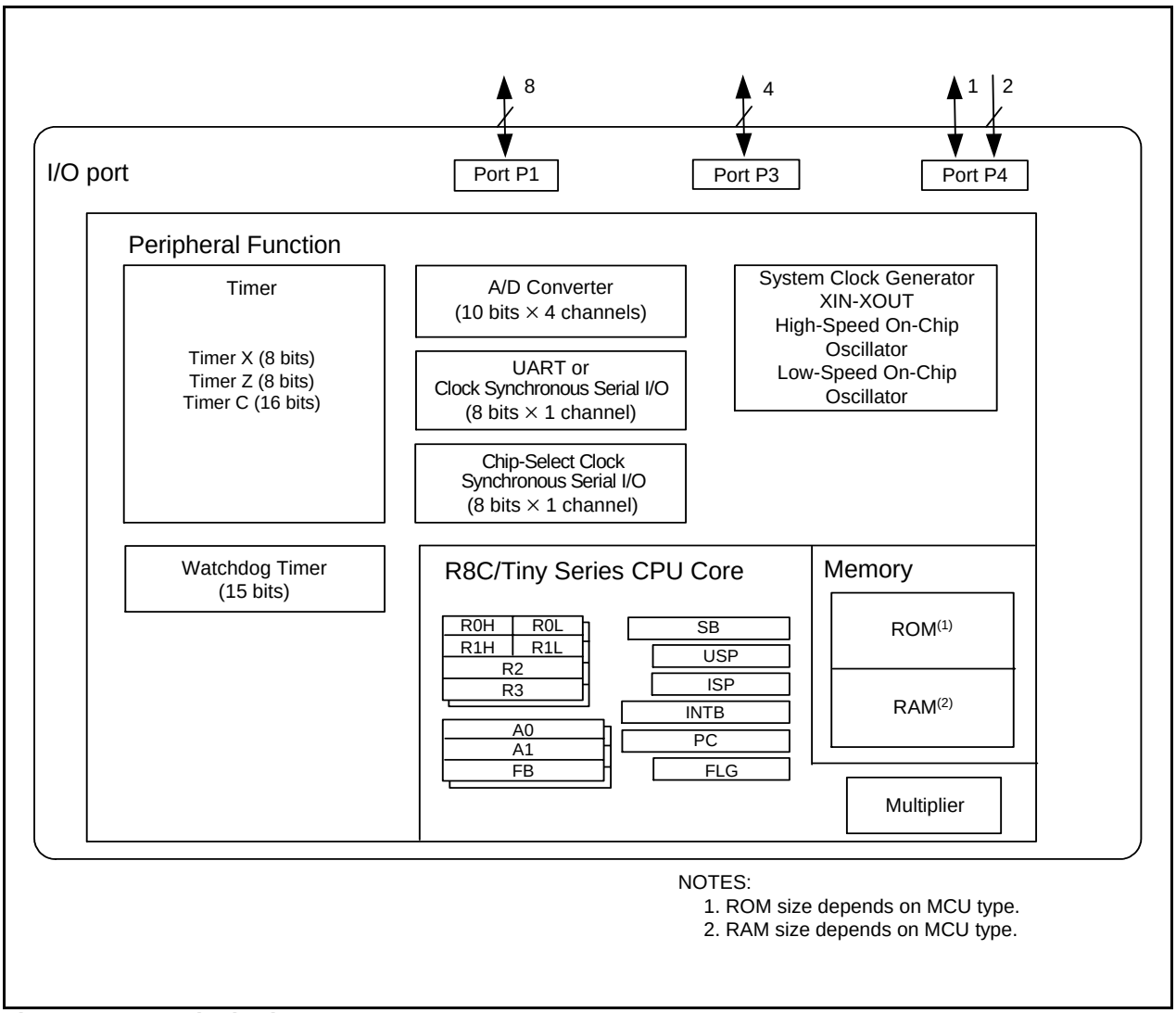

Figure 1.1 Block Diagram

1.4 Product Information

Table 1.3 lists the Product Information of R8C/14 Group and Table 1.4 lists the Product Information of R8C/15 Group.

Table 1.3 Product Information of R8C/14 Group **As of Jan 2006**

Type No.	ROM capacity	RAM capacity	Package type	Remarks
R5F21142SP	8 Kbytes	512 bytes	PLSP0020JB-A	Flash memory version
R5F21143SP	12 Kbytes	768 bytes	PLSP0020JB-A	
R5F21144SP	16 Kbytes	1 Kbyte	PLSP0020JB-A	
R5F21142DSP	8 Kbytes	512 bytes	PLSP0020JB-A	D version
R5F21143DSP	12 Kbytes	768 bytes	PLSP0020JB-A	
R5F21144DSP	16 Kbytes	1 Kbyte	PLSP0020JB-A	

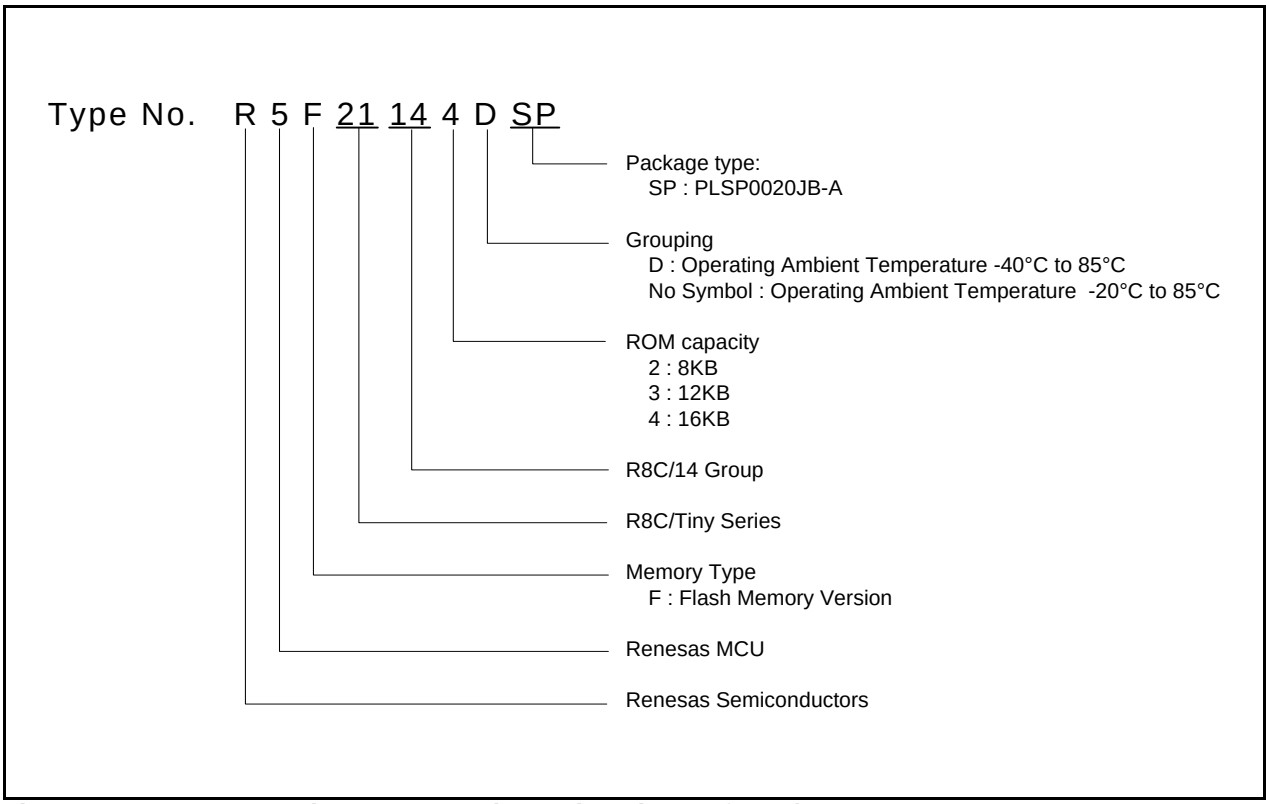

Figure 1.2 Part Number, Memory Size and Package of R8C/14 Group

Table 1.4 Product Information of R8C/15 Group **As of Jan 2006**

Type No.	ROM capacity		RAM capacity	Package type	Remarks
	Program ROM	Data flash			
R5F21152SP	8 Kbytes	1 Kbyte × 2	512 bytes	PLSP0020JB-A	Flash memory version
R5F21153SP	12 Kbytes	1 Kbyte × 2	768 bytes	PLSP0020JB-A	
R5F21154SP	16 Kbytes	1 Kbyte × 2	1 Kbyte	PLSP0020JB-A	
R5F21152DSP	8 Kbytes	1 Kbyte × 2	512 bytes	PLSP0020JB-A	D version
R5F21153DSP	12 Kbytes	1 Kbyte × 2	768 bytes	PLSP0020JB-A	
R5F21154DSP	16 Kbytes	1 Kbyte × 2	1 Kbyte	PLSP0020JB-A	

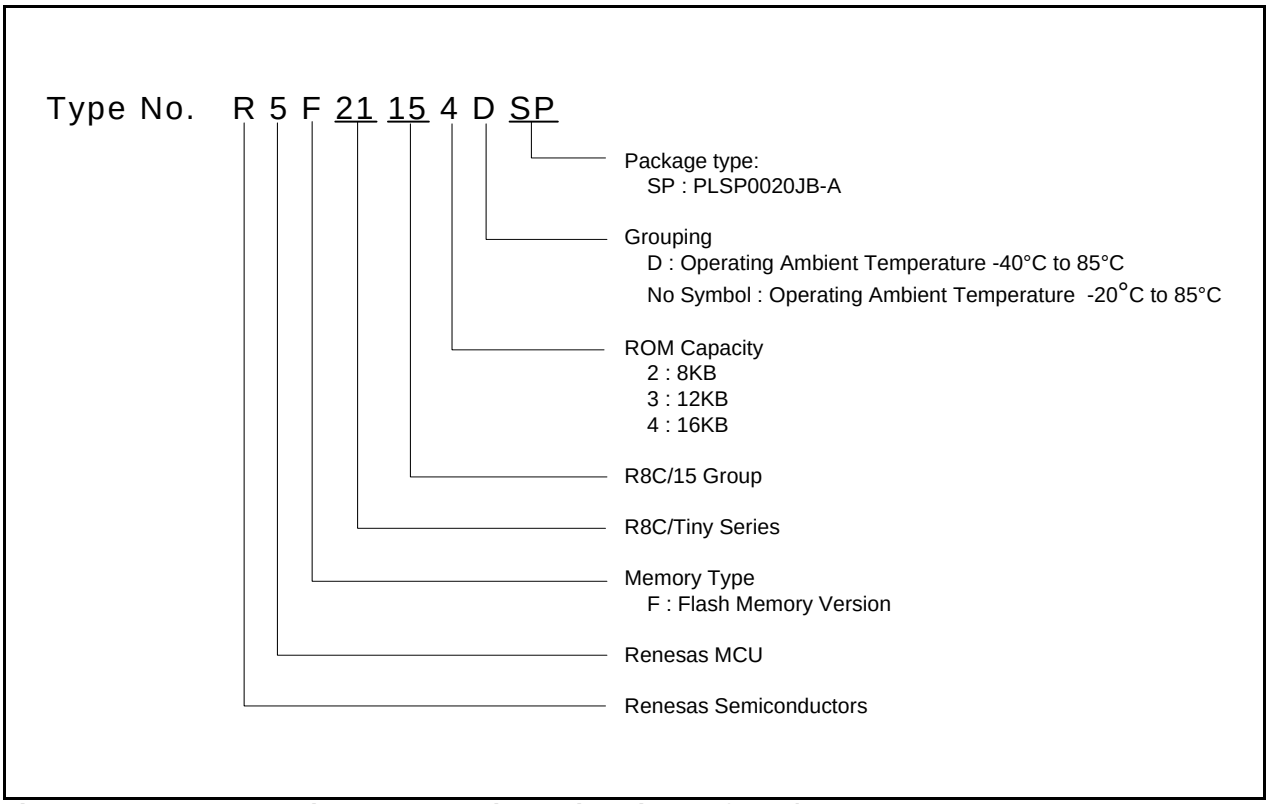

Figure 1.3 Part Number, Memory Size and Package of R8C/15 Group

1.5 Pin Assignments

Figure 1.4 shows the PLSP0020JB-A Package Pin Assignment (top view).

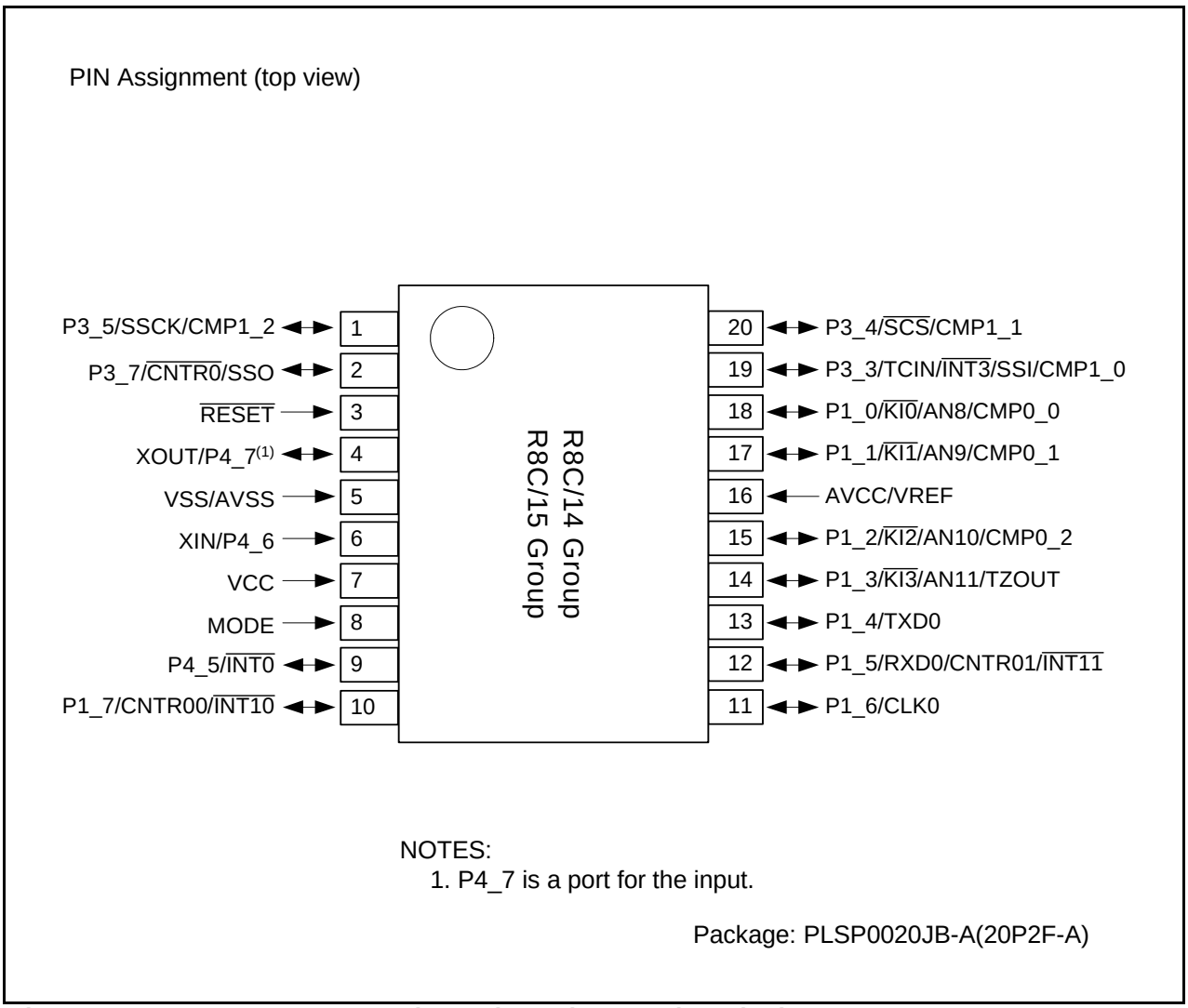

Figure 1.4 PLSP0020JB-A Package Pin Assignment (top view)

1.6 Pin Description

Table 1.5 lists the Pin Description and Table 1.6 lists the Pin Name Information by Pin Number.

Table 1.5 Pin Description

Function	Pin name	I/O type	Description
Power Supply Input	VCC VSS	I	Apply 2.7V to 5.5V to the VCC pin. Apply 0V to the VSS pin
Analog Power Supply Input	AVCC AVSS	I	Power supply input pins to A/D converter. Connect AVCC to VCC. Apply 0V to AVSS. Connect a capacitor between AVCC and AVSS.
Reset Input	$\overline{\text{RESET}}$	I	Input “L” on this pin resets the MCU
MODE	MODE	I	Connect this pin to VCC via a resistor
Main Clock Input	XIN	I	These pins are provided for the main clock generation circuit I/O. Connect a ceramic resonator or a crystal oscillator between the XIN and XOUT pins. To use an externally derived clock, input it to the XIN pin and leave the XOUT pin open.
Main Clock Output	XOUT	O	
$\overline{\text{INT}}$ Interrupt	$\overline{\text{INT0}}$, $\overline{\text{INT1}}$, $\overline{\text{INT3}}$	I	INT interrupt input pins
Key Input Interrupt	$\overline{\text{KI0}}$ to $\overline{\text{KI3}}$	I	Key input interrupt input pins
Timer X	CNTR0	I/O	Timer X I/O pin
	$\overline{\text{CNTR0}}$	O	Timer X output pin.
Timer Z	TZOUT	O	Timer Z output pin
Timer C	TCIN	I	Timer C input pin
	CMP0_0 to CMP0_2, CMP1_0 to CMP1_2	O	Timer C output pins.
Serial Interface	CLK0	I/O	Transfer clock I/O pin.
	RXD0	I	Serial data input pin.
	TXD0	O	Serial data output pin.
SSU	SSI	I/O	Data I/O pin.
	$\overline{\text{SCS}}$	I/O	Chip-select signal I/O pin.
	SSCK	I/O	Clock I/O pin.
	SSO	I/O	Data I/O pin.
Reference Voltage Input	VREF	I	Reference voltage input pin to A/D converter Connect VREF to VCC
A/D Converter	AN8 to AN11	I	Analog input pins to A/D converter
I/O Port	P1_0 to P1_7, P3_3 to P3_5, P3_7, P4_5	I/O	These are CMOS I/O ports. Each port contains an I/O select direction register, allowing each pin in that port to be directed for input or output individually. Any port set to input can select whether to use a pull-up resistor or not by program. P1_0 to P1_3 also function as LED drive ports.
Input Port	P4_6, P4_7	I	Port for input-only

I: Input O: Output I/O: Input and output

Table 1.6 Pin Name Information by Pin Number

Pin Number	Control Pin	Port	I/O Pin of Peripheral Function				
			Interrupt	Timer	Serial Interface	Clock Synchronous Serial I/O with Chip Select	A/D Converter
1		P3_5		CMP1_2		SSCK	
2		P3_7		$\overline{\text{CNTR0}}$		SSO	
3	$\overline{\text{RESET}}$						
4	XOUT	P4_7					
5	VSS/AVSS						
6	XIN	P4_6					
7	VCC						
8	MODE						
9		P4_5	$\overline{\text{INT0}}$				
10		P1_7	$\overline{\text{INT10}}$	CNTR00			
11		P1_6			CLK0		
12		P1_5	$\overline{\text{INT11}}$	CNTR01	RXD0		
13		P1_4			TXD0		
14		P1_3	$\overline{\text{KI3}}$	TZOUT			AN11
15		P1_2	$\overline{\text{KI2}}$	CMP0_2			AN10
16	AVCC/VREF						
17		P1_1	$\overline{\text{KI1}}$	CMP0_1			AN9
18		P1_0	$\overline{\text{KI0}}$	CMP0_0			AN8
19		P3_3	$\overline{\text{INT3}}$	TCIN/CMP1_0		SSI	
20		P3_4		CMP1_1		$\overline{\text{SCS}}$	

2. Central Processing Unit (CPU)

Figure 2.1 shows the CPU Register. The CPU contains 13 registers. Of these, R0, R1, R2, R3, A0, A1 and FB comprise a register bank. Two sets of register banks are provided.

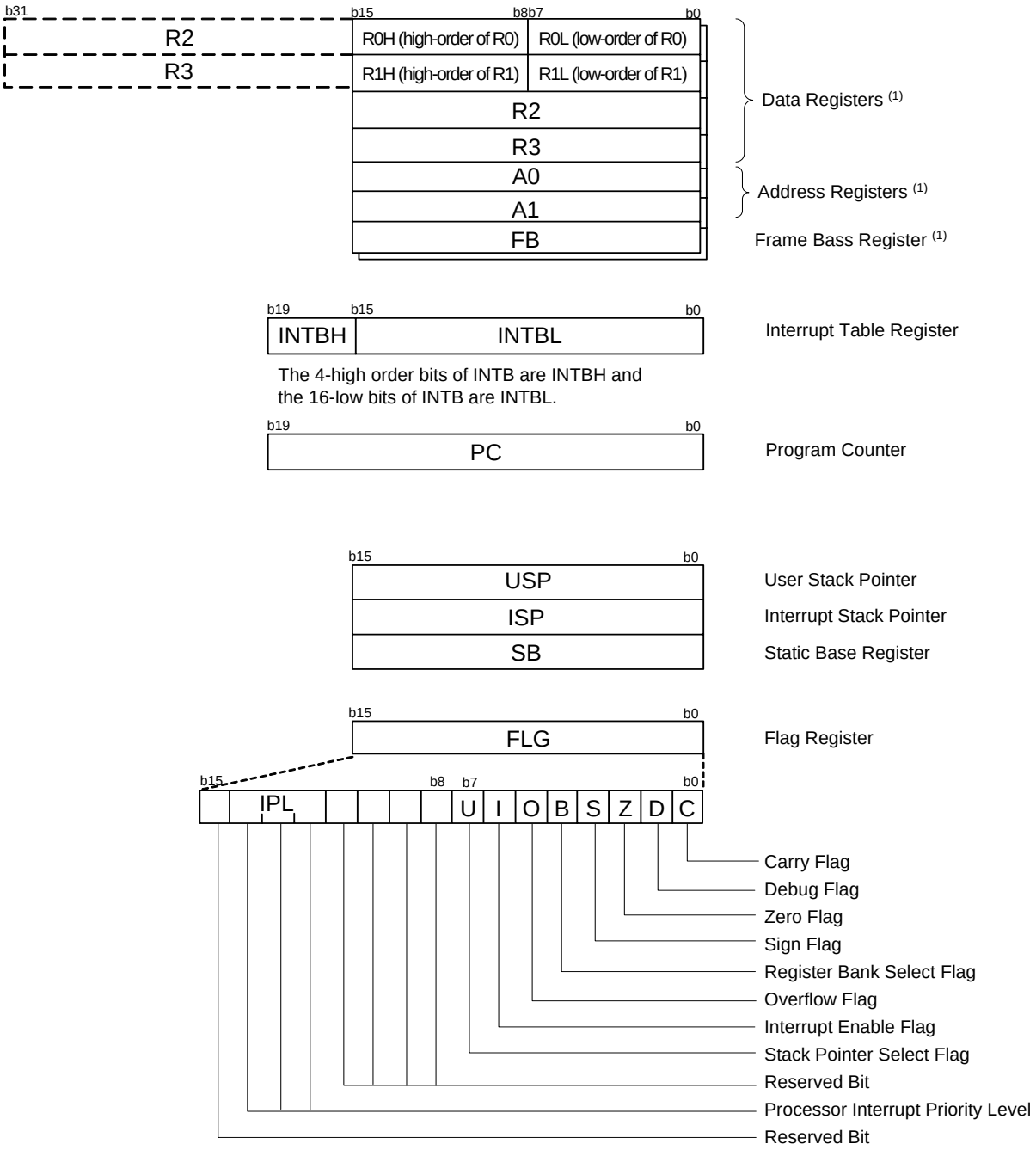

NOTES:
1. A register bank comprises these registers. Two sets of register banks are provided

Figure 2.1 CPU Register

2.1 Data Registers (R0, R1, R2 and R3)

R0 is a 16-bit register for transfer, arithmetic and logic operations. The same applies to R1 to R3. The R0 can be split into high-order bit (R0H) and low-order bit (R0L) to be used separately as 8-bit data registers. The same applies to R1H and R1L as R0H and R0L. R2 can be combined with R0 to be used as a 32-bit data register (R2R0). The same applies to R3R1 as R2R0.

2.2 Address Registers (A0 and A1)

A0 is a 16-bit register for address register indirect addressing and address register relative addressing. They also are used for transfer, arithmetic and logic operations. The same applies to A1 as A0. A0 can be combined with A0 to be used as a 32-bit address register (A1A0).

2.3 Frame Base Register (FB)

FB is a 16-bit register for FB relative addressing.

2.4 Interrupt Table Register (INTB)

INTB is a 20-bit register indicates the start address of an interrupt vector table.

2.5 Program Counter (PC)

PC, 20 bits wide, indicates the address of an instruction to be executed.

2.6 User Stack Pointer (USP) and Interrupt Stack Pointer (ISP)

The stack pointer (SP), USP and ISP, are 16 bits wide each. The U flag of FLG is used to switch between USP and ISP.

2.7 Static Base Register (SB)

SB is a 16-bit register for SB relative addressing.

2.8 Flag Register (FLG)

FLG is a 11-bit register indicating the CPU state.

2.8.1 Carry Flag (C)

The C flag retains a carry, borrow, or shift-out bit that has occurred in the arithmetic logic unit.

2.8.2 Debug Flag (D)

The D flag is for debug only. Set to “0”.

2.8.3 Zero Flag (Z)

The Z flag is set to “1” when an arithmetic operation resulted in 0; otherwise, “0”.

2.8.4 Sign Flag (S)

The S flag is set to “1” when an arithmetic operation resulted in a negative value; otherwise, “0”.

2.8.5 Register Bank Select Flag (B)

The register bank 0 is selected when the B flag is “0”. The register bank 1 is selected when this flag is set to “1”.

2.8.6 Overflow Flag (O)

The O flag is set to “1” when the operation resulted in an overflow; otherwise, “0”.

2.8.7 Interrupt Enable Flag (I Flag)

The I flag enables a maskable interrupt.
An interrupt is disabled when the I flag is set to “0”, and are enabled when the I flag is set to “1”. The I flag is set to “0” when an interrupt request is acknowledged.

2.8.8 Stack Pointer Select Flag (U Flag)

ISP is selected when the U flag is set to “0”, USP is selected when the U flag is set to “1”.
The U flag is set to “0” when a hardware interrupt request is acknowledged or the INT instruction of software interrupt numbers 0 to 31 is executed.

2.8.9 Processor Interrupt Priority Level (IPL)

IPL, 3 bits wide, assigns processor interrupt priority levels from level 0 to level 7.
If a requested interrupt has greater priority than IPL, the interrupt is enabled.

2.8.10 Reserved Bit

When write to this bit, set to “0”. When read, its content is indeterminate.

3. Memory

3.1 R8C/14 Group

Figure 3.1 is a Memory Map of R8C/14 Group. The R8C/14 group provides 1-Mbyte address space from addresses 00000h to FFFFFh.
The internal ROM is allocated lower addresses beginning with address 0FFFFh. For example, a 16-Kbyte internal ROM is allocated addresses 0C000h to 0FFFFh.
The fixed interrupt vector table is allocated addresses 0FFDCh to 0FFFFh. They store the starting address of each interrupt routine.
The internal RAM is allocated higher addresses beginning with address 00400h. For example, a 1-Kbyte internal RAM is allocated addresses 00400h to 007FFh. The internal RAM is used not only for storing data but for calling subroutines and stacks when interrupt request is acknowledged.
Special function registers (SFR) are allocated addresses 00000h to 002FFh. The peripheral function control registers are allocated them. All addresses, which have nothing allocated within the SFR, are reserved area and cannot be accessed by users.

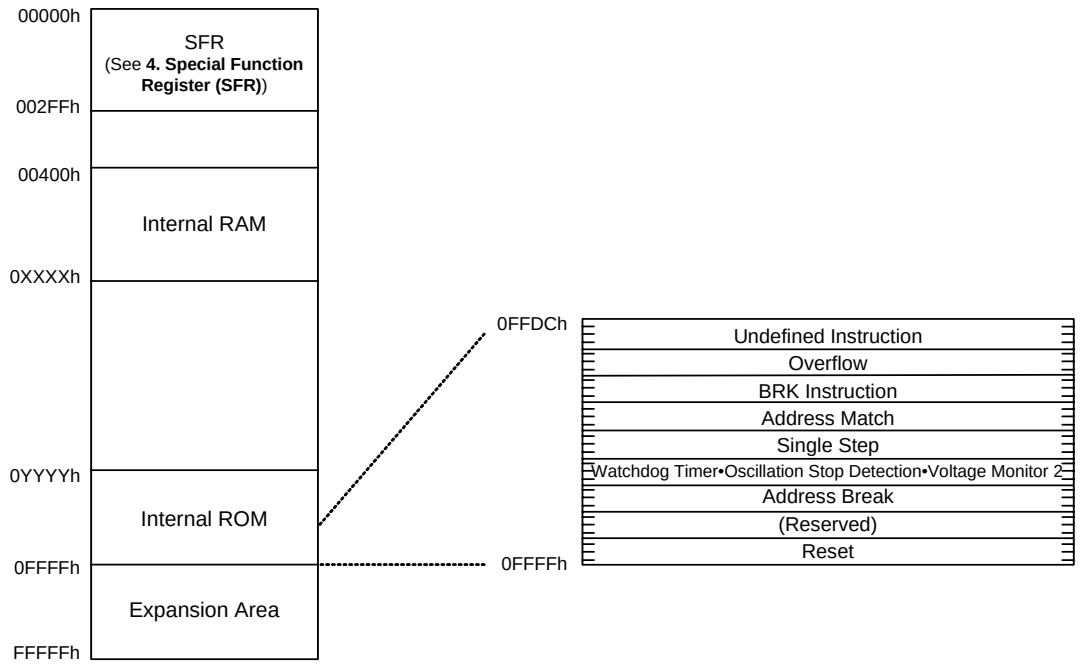

NOTES:
1. Blank spaces are reserved. No access is allowed.

Part Number	Internal ROM		Internal RAM	
	Size	0YYYYh	Size	0XXXXh
R5F21144SP, R5F21144DSP	16 Kbytes	0C000h	1 Kbytes	007FFh
R5F21143SP, R5F21143DSP	12 Kbytes	0D000h	768 bytes	006FFh
R5F21142SP, R5F21142DSP	8 Kbytes	0E000h	512 bytes	005FFh

Figure 3.1 Memory Map of R8C/14 Group

3.2 R8C/15 Group

Figure 3.2 is a Memory Map of R8C/15 Group. The R8C/15 group provides 1-Mbyte address space from addresses 00000h to FFFFFh.
The internal ROM (program ROM) is allocated lower addresses beginning with address 0FFFFh. For example, a 16-Kbyte internal ROM is allocated addresses 0C000h to 0FFFFh.
The fixed interrupt vector table is allocated addresses 0FFDCh to 0FFFFh. They store the starting address of each interrupt routine.
The internal ROM (data flash) is allocated addresses 02400h to 02BFFh.
The internal RAM is allocated higher addresses beginning with address 00400h. For example, a 1-Kbyte internal RAM is allocated addresses 00400h to 007FFh. The internal RAM is used not only for storing data but for calling subroutines and stacks when interrupt request is acknowledged.
Special function registers (SFR) are allocated addresses 00000h to 002FFh. The peripheral function control registers are allocated them. All addresses, which have nothing allocated within the SFR, are reserved area and cannot be accessed by users.

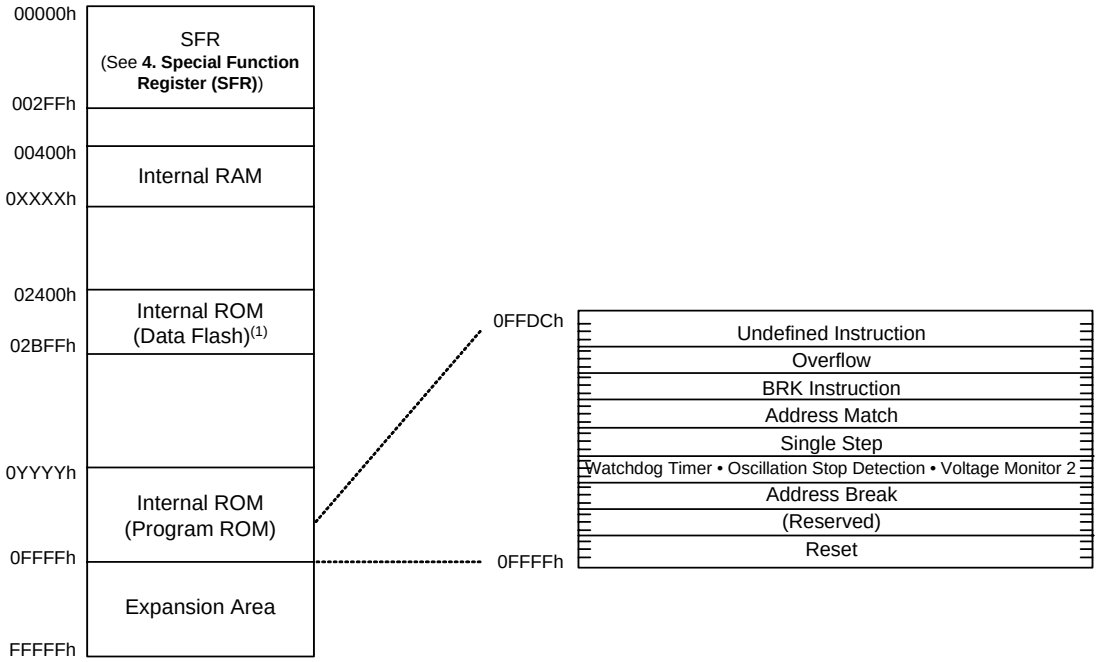

NOTES:
1. The data flash block A (1 Kbyte) and block B (1 Kbyte) are shown.
2. Blank spaces are reserved. No access is allowed.

Part Number	Internal ROM		Internal RAM	
	Size	0YYYYh	Size	0XXXXh
R5F21154SP, R5F21154DSP	16K bytes	0C000h	1K byte	007FFh
R5F21153SP, R5F21153DSP	12K bytes	0D000h	768 bytes	006FFh
R5F21152SP, R5F21152DSP	8K bytes	0E000h	512 bytes	005FFh

Figure 3.2 Memory Map of R8C/15 Group

4. Special Function Register (SFR)

SFR (Special Function Register) is the control register of peripheral functions. Tables 4.1 to 4.4 list the SFR information.

Table 4.1 SFR Information(1)(1)

Address	Register	Symbol	After reset
0000h			
0001h			
0002h			
0003h			
0004h	Processor Mode Register 0	PM0	00h
0005h	Processor Mode Register 1	PM1	00h
0006h	System Clock Control Register 0	CM0	01101000b
0007h	System Clock Control Register 1	CM1	00100000b
0008h			
0009h	Address Match Interrupt Enable Register	AIER	00h
000Ah	Protect Register	PRCR	00h
000Bh			
000Ch	Oscillation Stop Detection Register	OCD	00000100b
000Dh	Watchdog Timer Reset Register	WDTR	XXh
000Eh	Watchdog Timer Start Register	WDTS	XXh
000Fh	Watchdog Timer Control Register	WDC	00011111b
0010h	Address Match Interrupt Register 0	RMAD0	00h
0011h			00h
0012h			X0h
0013h			
0014h	Address Match Interrupt Register 1	RMAD1	00h
0015h			00h
0016h			X0h
0017h			
0018h			
0019h			
001Ah			
001Bh			
001Ch	Count Source Protection Mode Register	CSPR	00h
001Dh			
001Eh	$\overline{\text{INT0}}$ Input Filter Select Register	INT0F	00h
001Fh			
0020h	High-Speed On-Chip Oscillator Control Register 0	HRA0	00h
0021h	High-Speed On-Chip Oscillator Control Register 1	HRA1	When shipping
0022h	High-Speed On-Chip Oscillator Control Register 2	HRA2	00h
0023h			
002Ah			
002Bh			
002Ch			
002Dh			
002Eh			
002Fh			
0030h			
0031h	Voltage Detection Register 1(2)	VCA1	00001000b
0032h	Voltage Detection Register 2(2)	VCA2	00h(3) 01000000b(4)
0033h			
0034h			
0035h			
0036h	Voltage Monitor 1 Circuit Control Register (2)	VW1C	0000X000b(3) 0100X001b(4)
0037h	Voltage Monitor 2 Circuit Control Register (5)	VW2C	00h
0038h			
0039h			
003Ah			
003Bh			
003Ch			
003Dh			
003Eh			
003Fh			

X: Undefined

NOTES:

1. Blank spaces are reserved. No access is allowed.
2. Software reset, the watchdog timer reset or the voltage monitor 2 reset does not affect this register.
3. Owing to Hardware reset.
4. Owing to Power-on reset or the voltage monitor 1 reset.
5. Software reset, the watchdog timer reset or the voltage monitor 2 reset does not affect the b2 and b3.

Table 4.2 SFR Information(2)(1)

Address	Register	Symbol	After reset
0040h			
0041h			
0042h			
0043h			
0044h			
0045h			
0046h			
0047h			
0048h			
0049h			
004Ah			
004Bh			
004Ch			
004Dh	Key Input Interrupt Control Register	KUPIC	XXXXX000b
004Eh	A/D Conversion Interrupt Control Register	ADIC	XXXXX000b
004Fh	SSU Interrupt Control Register	SSUAIC	XXXXX000b
0050h	Compare 1 Interrupt Control Register	CMP1IC	XXXXX000b
0051h	UART0 Transmit Interrupt Control Register	S0TIC	XXXXX000b
0052h	UART0 Receive Interrupt Control Register	S0RIC	XXXXX000b
0053h			
0054h			
0055h			
0056h	Timer X Interrupt Control Register	TXIC	XXXXX000b
0057h			
0058h	Timer Z Interrupt Control Register	TZIC	XXXXX000b
0059h	$\overline{\text{INT1}}$ Interrupt Control Register	INT1IC	XXXXX000b
005Ah	$\overline{\text{INT3}}$ Interrupt Control Register	INT3IC	XXXXX000b
005Bh	Timer C Interrupt Control Register	TCIC	XXXXX000b
005Ch	Compare 0 Interrupt Control Register	CMP0IC	XXXXX000b
005Dh	$\overline{\text{INT0}}$ Interrupt Control Register	INT0IC	XX00X000b
005Eh			
005Fh			
0060h			
0061h			
0062h			
0063h			
0064h			
0065h			
0066h			
0067h			
0068h			
0069h			
006Ah			
006Bh			
006Ch			
006Dh			
006Eh			
006Fh			
0070h			
0071h			
0072h			
0073h			
0074h			
0075h			
0076h			
0077h			
0078h			
0079h			
007Ah			
007Bh			
007Ch			
007Dh			
007Eh			
007Fh			

X: Undefined

NOTES:

1. Blank spaces are reserved. No access is allowed.

Table 4.3 SFR Information(3)(1)

Address	Register	Symbol	After reset
0080h	Timer Z Mode Register	TZMR	00h
0081h			
0082h			
0083h			
0084h	Timer Z Waveform Output Control Register	PUM	00h
0085h	Prescaler Z Register	PREZ	FFh
0086h	Timer Z Secondary Register	TZSC	FFh
0087h	Timer Z Primary Register	TZPR	FFh
0088h			
0089h			
008Ah	Timer Z Output Control Register	TZOC	00h
008Bh	Timer X Mode Register	TXMR	00h
008Ch	Prescaler X Register	PREX	FFh
008Dh	Timer X Register	TX	FFh
008Eh	Timer Count Source Setting Register	TCSS	00h
008Fh			
0090h	Timer C Register	TC	00h
0091h			00h
0092h			
0093h			
0094h			
0095h			
0096h	External Input Enable Register	INTEN	00h
0097h			
0098h	Key Input Enable Register	KIEN	00h
0099h			
009Ah	Timer C Control Register 0	TCC0	00h
009Bh	Timer C Control Register 1	TCC1	00h
009Ch	Capture, Compare 0 Register	TM0	00h
009Dh			00h(2)
009Eh	Compare 1 Register	TM1	FFh
009Fh			FFh
00A0h	UART0 Transmit/Receive Mode Register	U0MR	00h
00A1h	UART0 Bit Rate Register	U0BRG	XXh
00A2h	UART0 Transmit Buffer Register	U0TB	XXh
00A3h			XXh
00A4h	UART0 Transmit/Receive Control Register 0	U0C0	00001000b
00A5h	UART0 Transmit/Receive Control Register 1	U0C1	00000010b
00A6h	UART0 Receive Buffer Register	U0RB	XXh
00A7h			XXh
00A8h			
00A9h			
00AAh			
00ABh			
00ACh			
00ADh			
00AEh			
00AFh			
00B0h	UART Transmit/Receive Control Register 2	UCON	00h
00B1h			
00B2h			
00B3h			
00B4h			
00B5h			
00B6h			
00B7h			
00B8h	SS Control Register H	SSCRH	00h
00B9h	SS Control Register L	SSCRL	7Dh
00BAh	SS Mode Register	SSMR	18h
00BBh	SS Enable Register	SSER	00h
00BCh	SS Status Register	SSSR	00h
00BDh	SS Mode Register 2	SSMR2	00h
00BEh	SS Transmit Data Register	SSTDR	FFh
00BFh	SS Receive Data Register	SSRDR	FFh

X: Undefined

NOTES:

1. Blank spaces are reserved. No access is allowed.
2. When output compare mode (the TCC13 bit in the TCC1 register = 1) is selected, the value after reset is “FFFFh”.

Table 4.4 SFR Information(4)(1)

Address	Register	Symbol	After reset
00C0h	A/D Register	AD	XXh
00C1h			XXh
00C2h			
00C3h			
00C4h			
00C5h			
00C6h			
00C7h			
00C8h			
00C9h			
00CAh			
00CBh			
00CCh			
00CDh			
00CEh			
00CFh			
00D0h			
00D1h			
00D2h			
00D3h			
00D4h	A/D Control Register 2	ADCON2	00h
00D5h			
00D6h	A/D Control Register 0	ADCON0	00000XXXb
00D7h	A/D Control Register 1	ADCON1	00h
00D8h			
00D9h			
00DAh			
00DBh			
00DCh			
00DDh			
00DEh			
00DFh			
00E0h			
00E1h	Port P1 Register	P1	XXh
00E2h			
00E3h	Port P1 Direction Register	PD1	00h
00E4h			
00E5h	Port P3 Register	P3	XXh
00E6h			
00E7h	Port P3 Direction Register	PD3	00h
00E8h	Port P4 Register	P4	XXh
00E9h			
00EAh	Port P4 Direction Register	PD4	00h
00EBh			
00ECh			
00EDh			
00EEh			
00EFh			
00F0h			
00F1h			
00F2h			
00F3h			
00F4h			
00F5h			
00F6h			
00F7h			
00F8h			
00F9h			
00FAh			
00FBh			
00FCh	Pull-Up Control Register 0	PUR0	00XX0000b
00FDh	Pull-Up Control Register 1	PUR1	XXXXXX0Xb
00FEh	Port P1 Drive Capacity Control Register	DRR	00h
00FFh	Timer C Output Control Register	TCOUT	00h
01B3h	Flash Memory Control Register 4	FMR4	01000000b
01B4h			
01B5h	Flash Memory Control Register 1	FMR1	1000000Xb
01B6h			
01B7h	Flash Memory Control Register 0	FMR0	00000001b
0FFFFh	Optional Function Select Register	OFS	(2)

X: Undefined

NOTES:

1. Blank columns, 0100h to 01B2h and 01B8h to 02FFh are all reserved. No access is allowed.
2. The OFS register cannot be changed by program. Use a flash programmer to write to it.

5. Reset

There are resets: hardware reset, power-on reset, voltage monitor 1 reset, voltage monitor 2 reset, watchdog timer reset and software reset. Table 5.1 lists the Reset Name and Factor.

Table 5.1 Reset Name and Factor

Reset Name	Factor
Hardware Reset	Input voltage of $\overline{\text{RESET}}$ pin is held “L”
Power-On Reset	VCC rises
Voltage Monitor 1 Reset	VCC falls (monitor voltage : Vdet1)
Voltage Monitor 2 Reset	VCC falls (monitor voltage : Vdet2)
Watchdog Timer Reset	Underflow of watchdog timer
Software Reset	Write “1” to PM03 bit in PM0 register

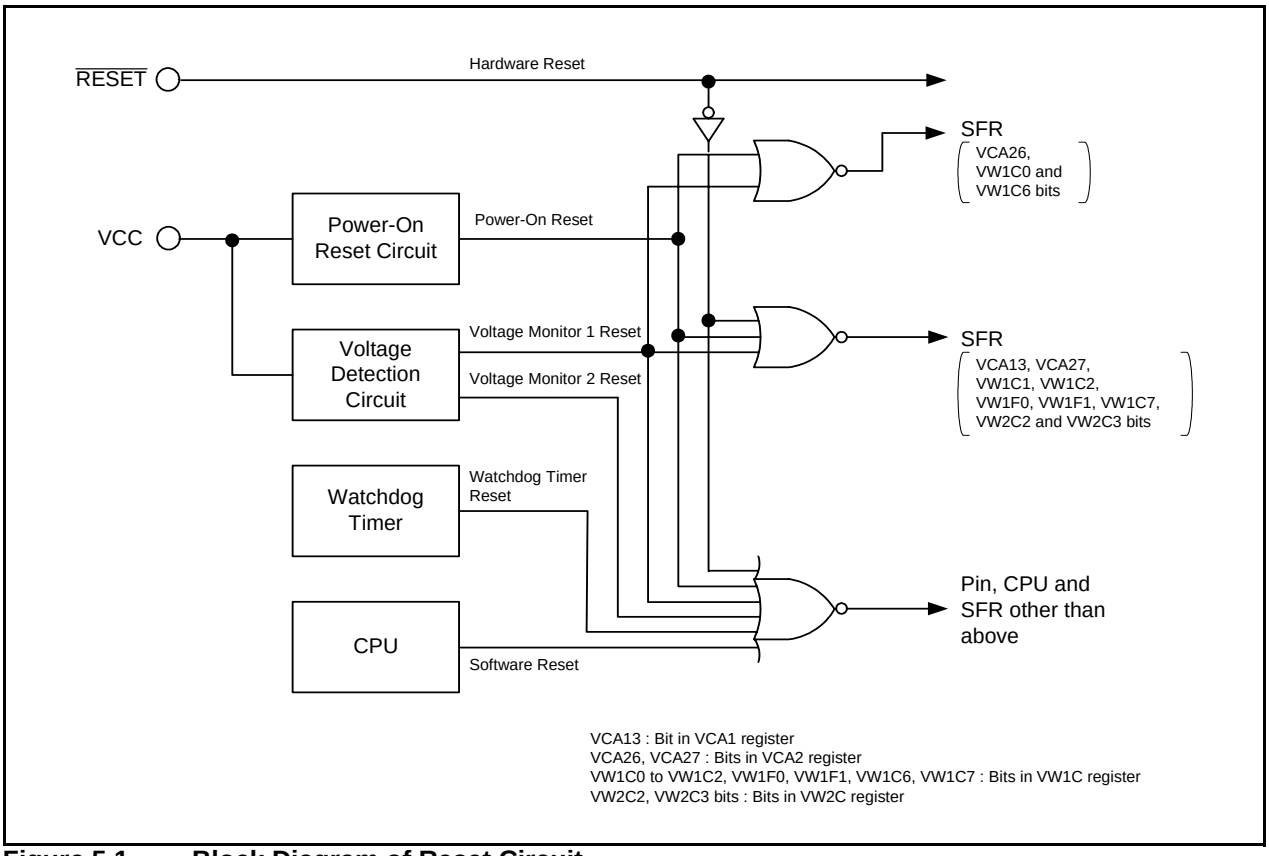

Figure 5.1 Block Diagram of Reset Circuit

Table 5.2 shows the Pin Status after Reset, Figure 5.2 shows CPU Register Status after Reset and Figure 5.3 shows Reset Sequence.

Table 5.2 Pin Status after Reset

Pin Name	Pin Status
P1	Input Port
P3_3 to P3_5, P3_7	Input Port
P4_5 to P4_7	Input Port

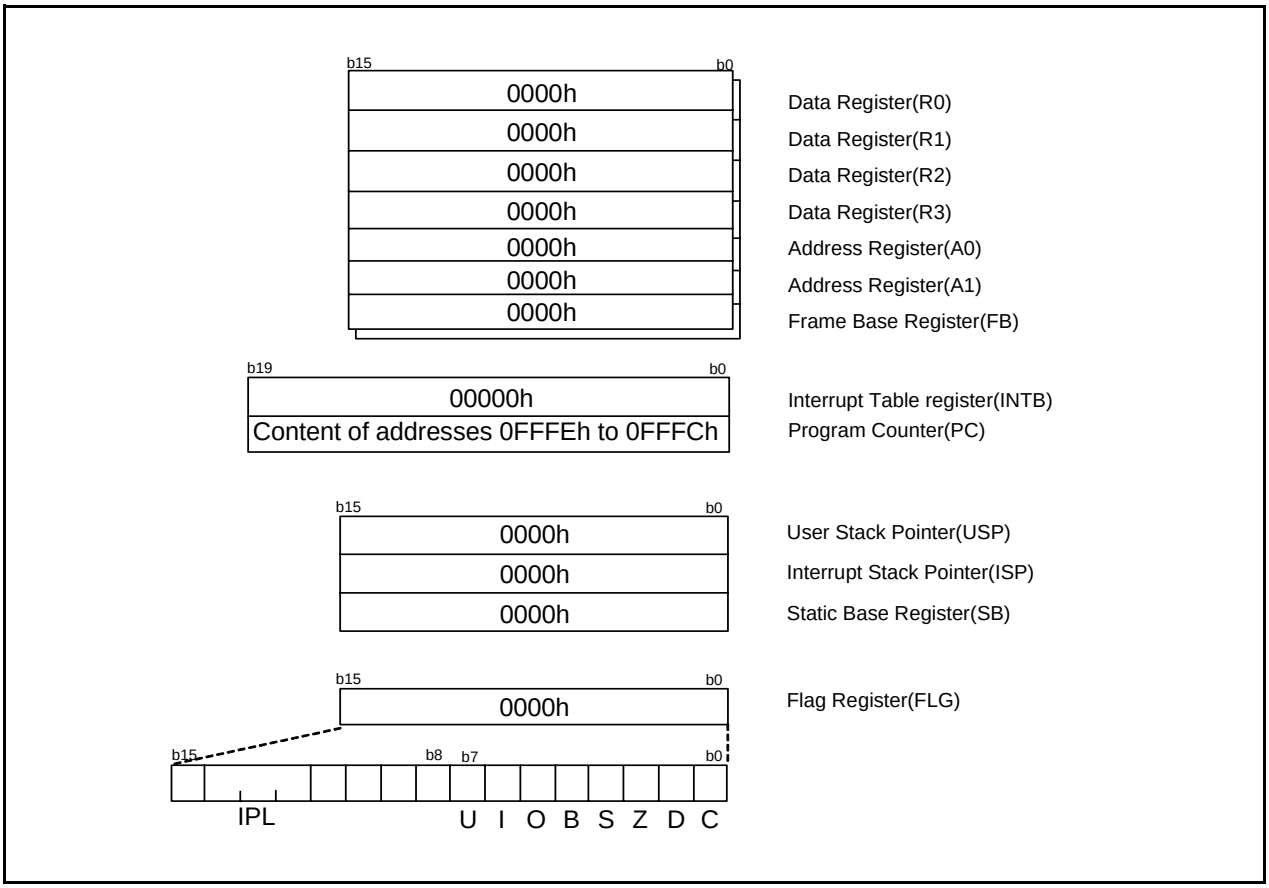

Figure 5.2 CPU Register Status after Reset

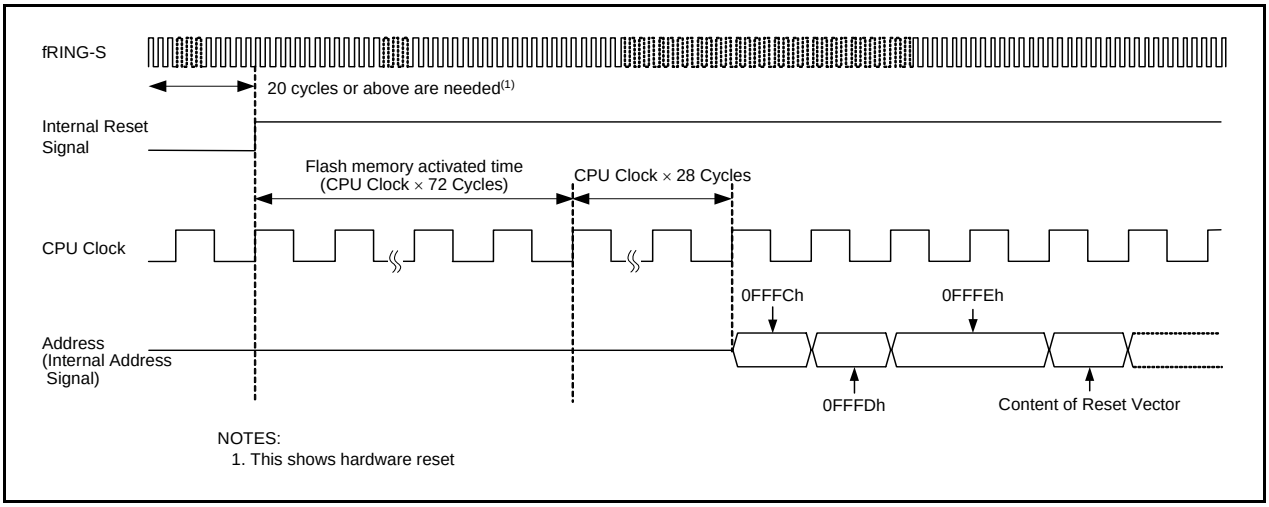

Figure 5.3 Reset Sequence

5.1 Hardware Reset

A reset is applied using the RESET pin. When an “L” signal is applied to the RESET pin while the power supply voltage meets the recommended performance condition, the pins, CPU and SFR are reset (refer to **Table 5.2 Pin Status after Reset**). When the input level applied to the RESET pin changes “L” to “H”, the program is executed beginning with the address indicated by the reset vector. After reset, the low-speed on-chip oscillator clock divided-by-8 is automatically selected for the CPU clock.
Refer to **4.** Special Function Register (SFR) for the status of the SFR after reset.
The internal RAM is not reset. If the RESET pin is pulled “L” during writing to the internal RAM, the internal RAM will be in indeterminate state.
Figure 5.4 shows the Example of Hardware Reset Circuit and Operation and Figure 5.5 shows the Example of Hardware Reset Circuit (Use Example of External Power Supply Voltage Detection Circuit) and Operation.

5.1.1 When the power supply is stable

(1) Apply an “L” signal to the RESET pin.
(2) Wait for 500μs (1/fRING-S×20).
(3) Apply an “H” signal to the RESET pin.

5.1.2 Power on

(1) Apply an “L” signal to the RESET pin.
(2) Let the power supply voltage increase until it meets the recommended performance condition.
(3) Wait for td(P-R) or more until the internal power supply stabilizes (Refer to **19. Electrical Characteristics**).
(4) Wait for 500μs (1/fRING-S×20).
(5) Apply an “H” signal to the RESET pin.

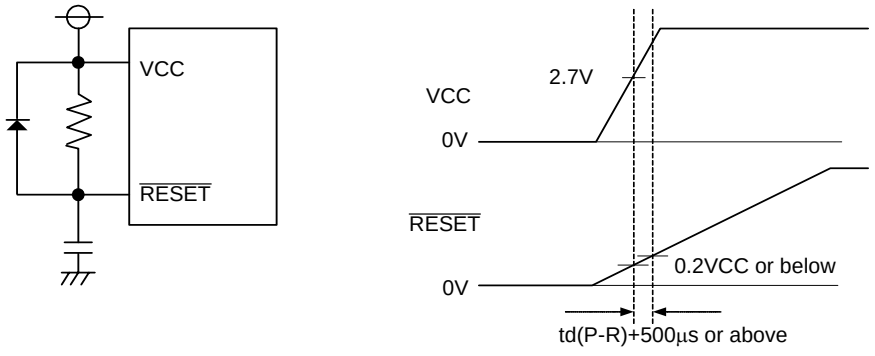

NOTES:

1. Refer to **19. Electrical Characteristics.**

Figure 5.4 Example of Hardware Reset Circuit and Operation

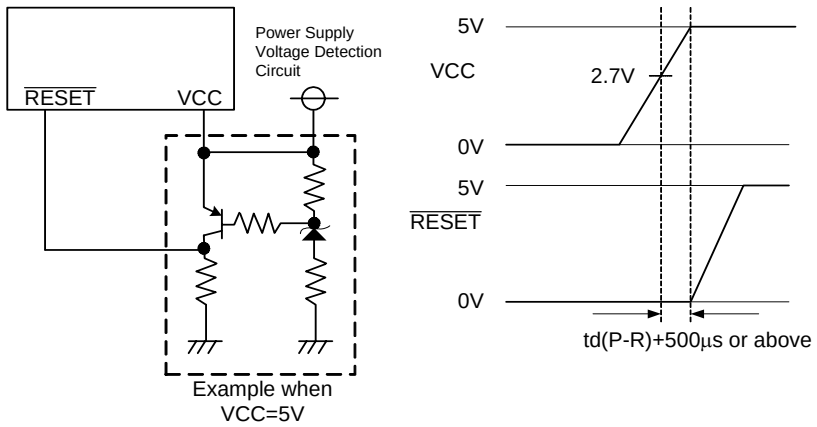

NOTES:

1. Refer to **19. Electrical Characteristics.**

Figure 5.5 Example of Hardware Reset Circuit (Use Example of External Power Supply Voltage Detection Circuit) and Operation

5.2 Power-On Reset Function

When the $\overline{\text{RESET}}$ pin is connected to the VCC pin via about 5kΩ pull-up resistor and the VCC pin rises, the function is enabled and the microcomputer resets its pins, CPU, and SFR. When a capacitor is connected to the $\overline{\text{RESET}}$ pin, always keep the voltage to the $\overline{\text{RESET}}$ pin 0.8VCC or more.

When the input voltage to the VCC pin reaches to the Vdet1 level or above, count operation of the low-speed on-chip oscillator clock starts. When the operation counts the low-speed on-chip oscillator clock for 32 times, the internal reset signal is held "H" and the microcomputer enters the reset sequence (See Figure 5.3). The low-speed on-chip oscillator clock divide-by-8 is automatically selected for the CPU after reset.

Refer to **4.** Special Function Register (SFR) for the status of the SFR after power-on reset.

The voltage monitor 1 reset is enabled after power-on reset.

Figure 5.6 shows the Example of Power-On Reset Circuit and Operation.

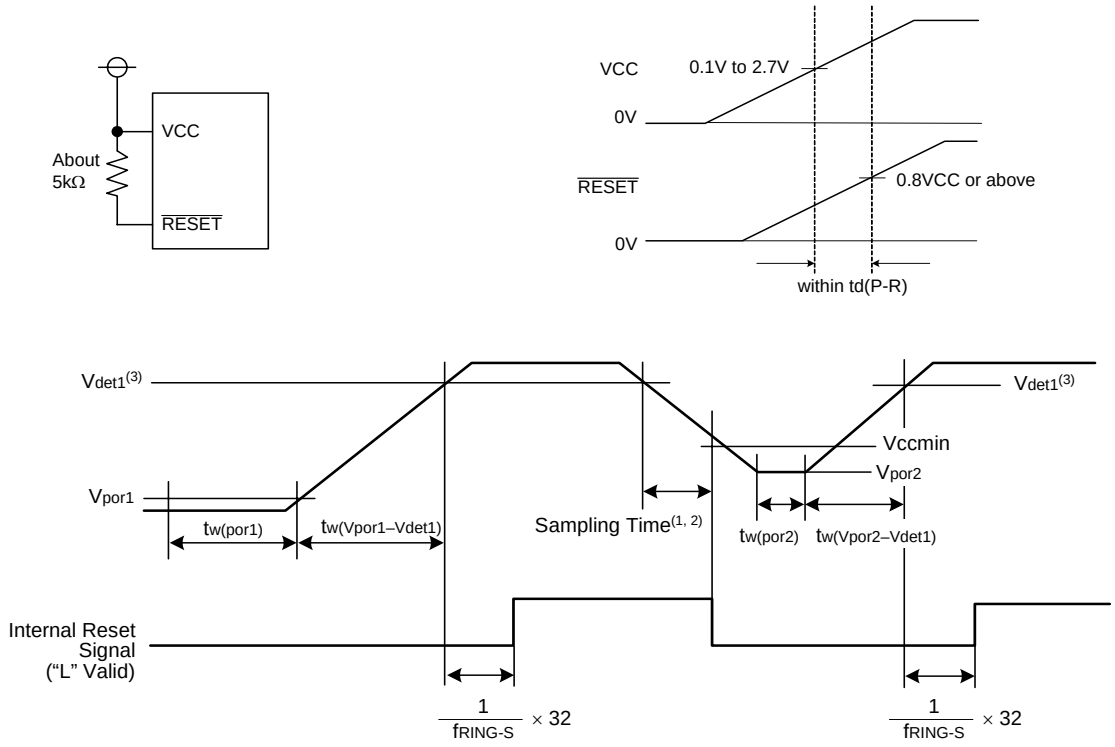

NOTES:
1. Hold the voltage of the microcomputer operation voltage range (Vccmin or above) within sampling time.
2. A sampling clock can be selected. Refer to **6. Voltage Detection Circuit** for details.
3. V_{det1} indicates the voltage detection level of the voltage detection 1 circuit. Refer to **6. Voltage Detection Circuit** for details.
4. Refer to **19. Electrical Characteristics.**

Figure 5.6 Example of Power-On Reset Circuit and Operation

5.3 Voltage Monitor 1 Reset

A reset is applied using the built-in voltage detection 1 circuit. The voltage detection 1 circuit monitors the input voltage to the VCC pin. The voltage to monitor is Vdet1.
When the input voltage to the VCC pin reaches to the Vdet1 level or below, the pins, CPU and SFR are reset.
And when the input voltage to the VCC pin reaches to the Vdet1 level or above, count operation of the low-speed on-chip oscillator clock starts. When the operation counts the low-speed on-chip oscillator clock for 32 times, the internal reset signal is held “H” and the microcomputer enters the reset sequence (See Figure 5.3). The low-speed on-chip oscillator clock divide-by-8 is automatically selected for the CPU after reset.
Refer to **4.** Special Function Register (SFR) for the status of the SFR after voltage monitor 1 reset.
The internal RAM is not reset. When the input voltage to the VCC pin reaches to the Vdet1 level or below during writing to the internal RAM, the internal RAM is in indeterminate state.
Refer to **6. Voltage Detection Circuit** for details of voltage monitor 1 reset.

5.4 Voltage Monitor 2 Reset

A reset is applied using the built-in voltage detection 2 circuit. The voltage detection 2 circuit monitors the input voltage to the VCC pin. The voltage to monitor is Vdet2.
When the input voltage to the VCC pin drops to the Vdet2 level or below, the pins, CPU and SFR are reset and the program is executed beginning with the address indicated by the reset vector. After reset, the low-speed on-chip oscillator clock divide-by-8 is automatically selected for the CPU clock.
The voltage monitor 2 does not reset some SFRs. Refer to **4.** Special Function Register (SFR) for details.
The internal RAM is not reset. When the input voltage to the VCC pin reaches to the Vdet2 level or below during writing to the internal RAM, the internal RAM is in indeterminate state.
Refer to **6. Voltage Detection Circuit** for details of voltage monitor 2 reset.

5.5 Watchdog Timer Reset

When the PM12 bit in the PM1 register is set to “1” (reset when watchdog timer underflows), the microcomputer resets its pins, CPU and SFR if the watchdog timer underflows. Then the program is executed beginning with the address indicated by the reset vector. After reset, the low-speed on-chip oscillator clock divide-by-8 is automatically selected for the CPU clock.
After reset, the low-speed on-chip oscillator clock divide-by-8 is automatically selected for the CPU clock.
The watchdog timer reset does not reset some SFRs. Refer to **4.** Special Function Register (SFR) for details.
The internal RAM is not reset. When the watchdog timer underflows, the internal RAM is in indeterminate state.
Refer to **12. Watchdog Timer** for watchdog timer.

5.6 Software Reset

When the PM03 bit in the PM0 register is set to “1” (microcomputer reset), the microcomputer resets its pins, CPU and SFR. The the program is executed beginning with the address indicated by the reset vector. After reset, the low-speed on-chip oscillator clock divide-by-8 is automatically selected for the CPU clock.
The software reset does not reset some SFRs. Refer to **4.** Special Function Register (SFR) for details.
The internal RAM is not reset.

6. Voltage Detection Circuit

The voltage detection circuit is a circuit to monitor the input voltage to the VCC pin. This circuit monitors the VCC input voltage by the program. And the voltage monitor 1 reset, voltage monitor 2 interrupt and voltage monitor 2 reset can be used.
Table 6.1 lists the Specification of Voltage Detection Circuit and Figures 6.1 to 6.3 show the Block Diagrams. Figures 6.4 to 6.6 show the Associated Registers.

Table 6.1 Specification of Voltage Detection Circuit

Item		Voltage Detection 1	Voltage Detection 2
VCC Monitor	Voltage to Monitor	Vdet1	Vdet2
	Detection Target	Whether passing through Vdet1 by rising or falling	Whether passing through Vdet2 by rising or falling
	Monitor	None	VCA13 bit in VCA1 register
			Whether VCC is higher or lower than Vdet2
Process When Voltage Is Detected	Reset	Voltage Monitor 1 Reset	Voltage Monitor 2 Reset
		Reset at Vdet1 > VCC; Restart CPU operation at VCC > Vdet1	Reset at Vdet2 > VCC Restart CPU operation after a specified time
	Interrupt	None	Voltage Monitor 2 Interrupt
			Interrupt request at Vdet2 > VCC and VCC > Vdet2 when digital filter is enabled; Interrupt request at Vdet2 > VCC or VCC > Vdet2 when digital filter is disabled
Digital Filter	Switch Enabled / Disabled	Available	Available
	Sampling Time	(Divide-by-n of fRING-S) x 4 n : 1, 2, 4 and 8	(Divide-by-n of fRING-S) x 4 n : 1, 2, 4 and 8

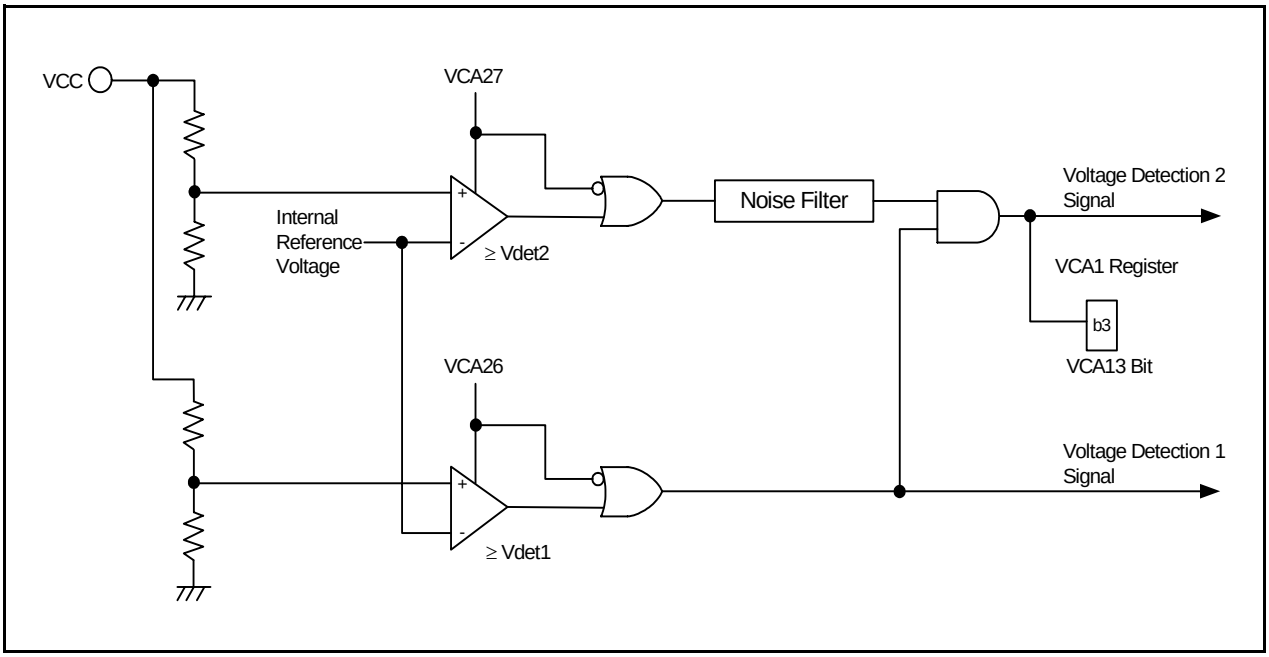

Figure 6.1 Block Diagram of Voltage Detection Circuit

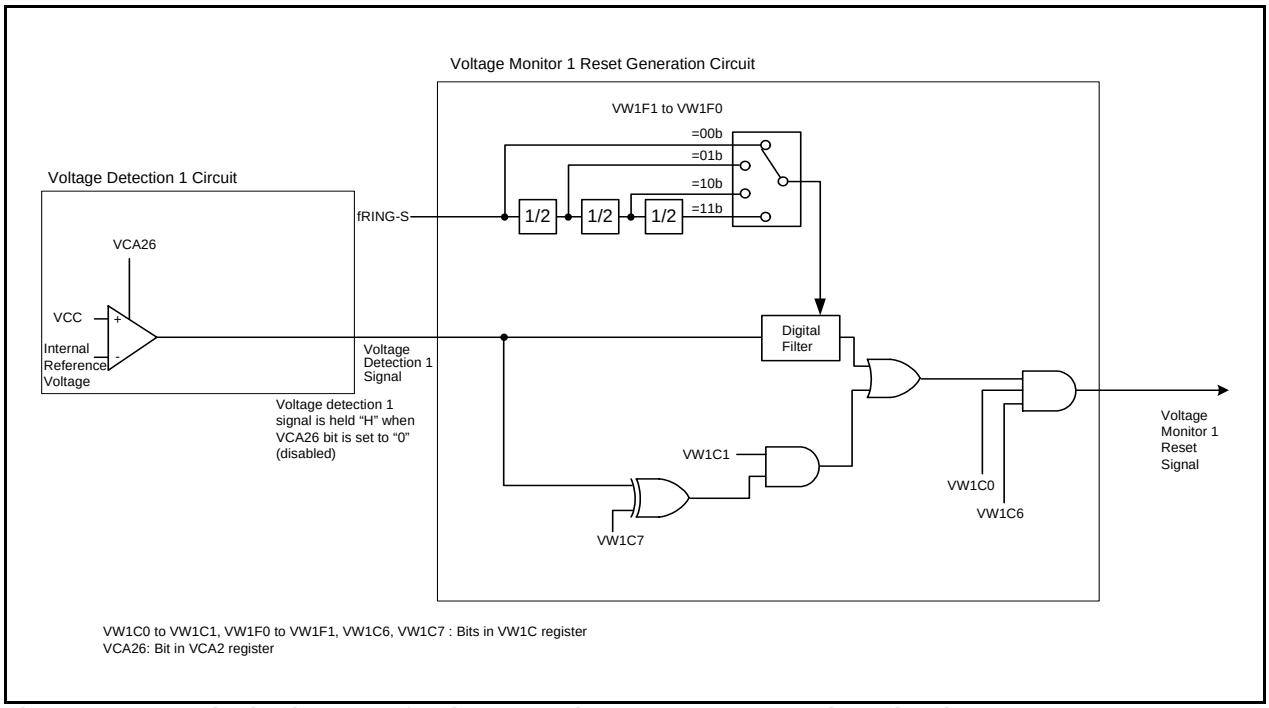

Figure 6.2 Block Diagram of Voltage Monitor 1 Reset Generation Circuit

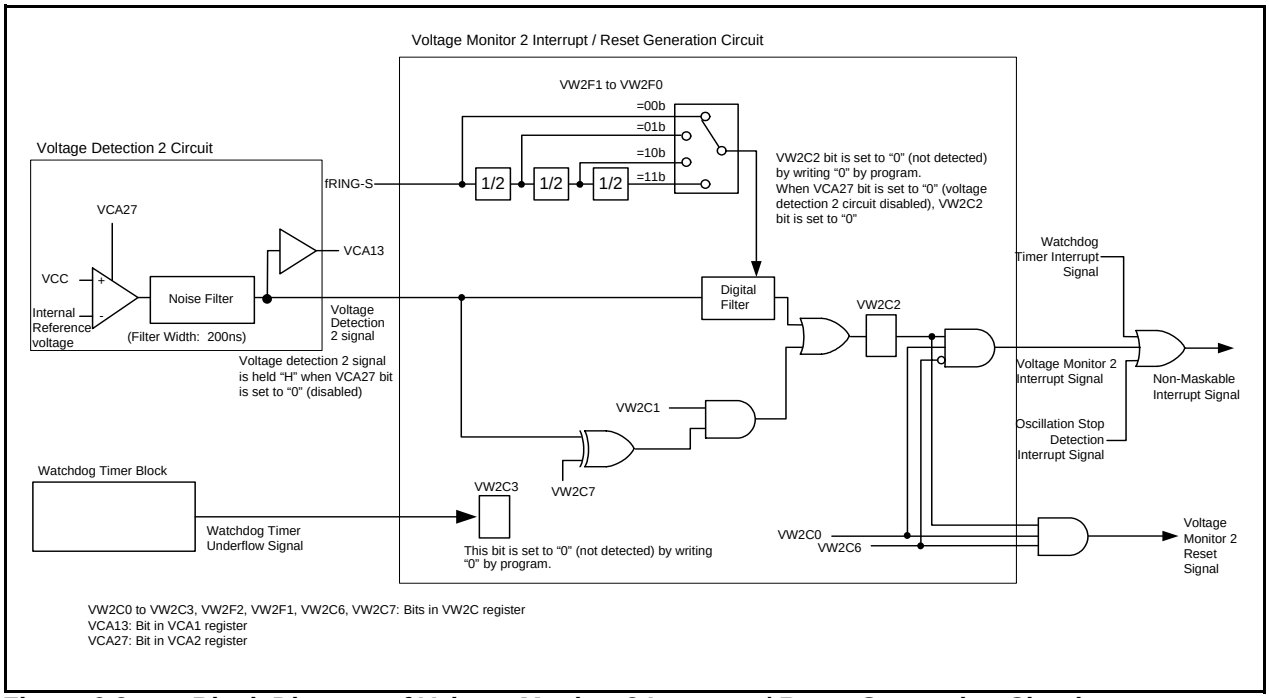

Figure 6.3 Block Diagram of Voltage Monitor 2 Interrupt / Reset Generation Circuit

Voltage Detection Register 1

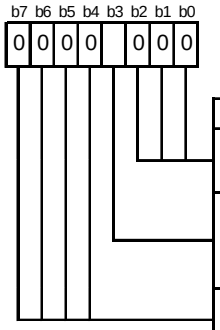

Symbol	Address	After Reset[2]
VCA1	0031h	00001000b

Bit Symbol	Bit Name	Function	RW
— (b2-b0)	Reserved Bit	Set to "0"	RW
VCA13	Voltage Detection 2 Signal Monitor Flag[1]	0 : VCC < Vdet2 1 : VCC ≥ Vdet2 or voltage detection 2 circuit disabled	RO
— (b7-b4)	Reserved Bit	Set to "0"	RW

NOTES :

1. The VCA13 bit is enabled when the VCA27 bit in the VCA2 register is set to "1" (voltage detection 2 circuit enabled). The VCA13 bit is set to "1" (VCC ≥ Vdet 2) when the VCA27 bit in the VCA2 register is set to "0" (voltage detection 2 circuit disabled).
2. The software reset, watchdog timer reset and voltage monitor 2 reset do not affect this register.

Voltage Detection Register 2[1]

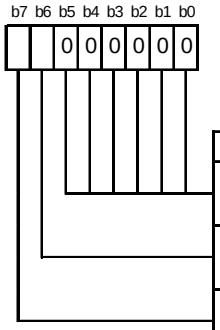

Symbol	Address	After Reset[4]
VCA2	0032h	Hardware Reset : 00h Power-On Reset, Voltage Monitor 1Reset : 01000000b

Bit Symbol	Bit Name	Function	RW
— (b5-b0)	Reserved Bit	Set to "0"	RW
VCA26	Voltage Detection 1 Enable Bit[2]	0 : Voltage detection 1 circuit disabled 1 : Voltage detection 1 circuit enabled	RW
VCA27	Voltage Detection 2 Enable Bit[3]	0 : Voltage detection 2 circuit disabled 1 : Voltage detection 2 circuit enabled	RW

NOTES :

1. Set the PRC3 bit in the PRCR register to "1" (write enable) before writing to this register.
2. When using the voltage monitor 1 reset, set the VCA26 bit to "1".
   After the VCA26 bit is set from "0" to "1", the voltage detection circuit elapses for td(E-A) before starting operation.
3. When using the voltage monitor 2 interrupt / reset or the VCA13 bit in the VCA1 register, set the VCA27 bit to "1".
   After the VCA27 bit is from "0" to "1", the voltage detection circuit elapses for td(E-A) before starting operation.
4. The software reset, watchdog timer reset and voltage monitor 2 reset do not affect this register.

Figure 6.4 VCA1 and VCA2 Registers

Voltage Monitor 1 Circuit Control Register (1)

b7	b6	b5	b4	b3	b2	b1	b0
					0		

Symbol	Address	After Reset(2)
VW1C	0036h	Hardware Reset : 0000X000b Power-On Reset, Voltage Monitor 1 Reset : 0100X001b

Bit Symbol	Bit Name	Function	RW
VW1C0	Voltage Monitor 1 Reset Enable Bit(3)	0 : Disable 1 : Enable	RW
VW1C1	Voltage Monitor 1 Digital Filter Disable Mode Select Bit	0 : Digital filter enabled mode (digital filter circuit enabled) 1 : Digital filter disabled mode (digital filter circuit disabled)	RW
VW1C2	Reserved Bit	Set to “0”.	RW
— (b3)	Reserved Bit	When read, its content is indeterminate.	RO
VW1F0	Sampling Clock Select Bit	b5 b4 0 0 : fRING-S divide-by-1 0 1 : fRING-S divide-by-2 1 0 : fRING-S divide-by-4 1 1 : fRING-S divide-by-8	RW
VW1F1			RW
VW1C6	Voltage Monitor 1 Circuit Mode Select Bit	When the VW1C0 bit is set to “1” (enables voltage monitor 1 reset), set to “1”.	RW
VW1C7	Voltage Monitor 1 Reset Generation Condition Select Bit	When the VW1C1 bit is set to “1” (digital filter disabled mode), set to “1”.	RW

NOTES :

1. Set the PRC3 bit in the PRCR register to “1” (write enable) before writing to this register.
   When rewriting the VW1C register, the VW1C2 bit may be set to “1”. Set the VW1C2 bit to “0” after rewriting the VW1C register.
2. The value after reset remains unchanged in software reset, watchdogi timer reset and voltage monitor 2 reset.
3. The VW1C0 bit is enabled when the VCA26 bit in the VCA2 register is set to “1” (voltage detection 1 circuit enabled). Set the VW1C0 bit to “0” (disable), when the VCA26 bit is set to “0” (voltage detection 1 circuit disabled).

Figure 6.5 VW1C Register

Voltage Monitor 2 Circuit Control Register (1)

b7 b6 b5 b4 b3 b2 b1 b0

Symbol	Address	After Reset(8)
VW2C	0037h	00h

Bit Symbol	Bit Name	Function	RW
VW2C0	Voltage Monitor 2 Interrupt / Reset Enable Bit(6, 10)	0 : Disable 1 : Enable	RW
VW2C1	Voltage Monitor 2 Digital Filter Disable Mode Select Bit(2)	0 : Digital filter enabled mode (digital filter circuit enabled) 1 : Digital filter disabled mode (digital filter circuit disabled)	RW
VW2C2	Voltage Change Detection Flag(3,4,8)	0 : Not detected 1 : Vdet2 pass detected	RW
VW2C3	WDT Detection Flag(4,8)	0 : Not detected 1 : Detected	RW
VW2F0	Sampling Clock Select Bit	b5 b4 0 0 : fRING-S divide-by-1 0 1 : fRING-S divide-by-2 1 0 : fRING-S divide-by-4 1 1 : fRING-S divide-by-8	RW
VW2F1			RW
VW2C6	Voltage Monitor 2 Circuit Mode Select Bit(5)	0 : Voltage monitor 2 interrupt mode 1 : Voltage monitor 2 reset mode	RW
VW2C7	Voltage Monitor 2 Interrupt / Reset Generation Condition Select Bit(7,9)	0 : When VCC reaches Vdet2 or above 1 : When VCC reaches Vdet2 or below	RW

NOTES :

1. Set the PRC3 bit in the PRCR register to “1” (rewrite enable) before writing to this register.
   When rewriting the VW2C register, the VW2C2 bit may be set to “1”. Set the VW2C2 bit to “0” after rewriting the VW2C register.
2. When the voltage monitor 2 interrupt is used to exit stop mode and to return again, write “0” to the VW2C1 bit before writing “1”.
3. This bit is enabled when the VCA27 bit in the VCA2 register is set to “1” (voltage detection 2 circuit enabled).
4. Set this bit to “0” by a program. When writing “0” by a program, it is set to “0” (It remains unchanged even if it is set to “1”).
5. This bit is enabled when the VW2C0 bit is set to “1” (voltage monitor 2 interrupt / enables reset).
6. The VW2C0 bit is enabled when the VCA27 bit in the VCA2 register is set to “1” (voltage detection 2 circuit enabled). Set the VW2C0 bit to “0” (disable) when the VCA27 bit is set to “0” (voltage detection 2 circuit disabled).
7. The VW2C7 bit is enabled when the VW2C1 bit is set to “1” (digital filter disabled mode).
8. The VW2C2 and VW2C3 bits remain unchanged in the software reset, watchdog timer reset and voltage monitor 2 reset.
9. When the VW2C6 bit is set to “1” (voltage monitor 2 reset mode), set the VW2C7 bit to “1” (when VCC reaches to Vdet2 or below)(do not set to “0”).
10. Set the VW2C0 bit to “0” (disabled) under the conditions of the VCA13 bit in the VCA1 register set to “1” (VCC ≥ Vdet2 or voltage detection 2 circuit disabled), the VW2C1 bit set to “1” (digital filter disabled mode) and the VW2C7 bit set to “0” (when VCC reaches Vdet2 or above).
    Set the VW2C0 bit to “0” (disabled) under the conditions of the VCA13 bit set to “0” (VCC < Vdet2), the VW2C1 bit set to “1” (digital filter disabled mode) and the VW2C7 bit set to “1” (when VCC reaches Vdet2 or below).

Figure 6.6 VW2C Register

6.1 Monitoring VCC Input Voltage

6.1.1 Monitoring Vdet1

Vdet1 cannot be monitored.

6.1.2 Monitoring Vdet2

Set the VCA27 bit in the VCA2 register to “1” (voltage detection 2 circuit enabled). After td(E-A) (refer to **19. Electrical Characteristics**) elapse, Vdet2 can be monitored by the VCA13 bit in the VCA1 register.

6.2 Voltage Monitor 1 Reset

Table 6.2 lists the Setting Procedure of Voltage Monitor 1 Reset Associated Bit and Figure 6.7 shows the Operating Example of Voltage Monitor 1 Reset. When using the voltage monitor 1 reset to exit stop mode, set the VW1C1 bit in the VW1C register to “1” (digital filter disabled).

Table 6.2 Setting Procedure of Voltage Monitor 1 Reset Associated Bit

Procedure	When Using Digital Filter	When Not Using Digital Filter
1	Set the VCA26 bit in the VCA2 register to “1” (voltage detection 1 circuit enabled)	
2	Wait for td(E-A)	
3(1)	Select the sampling clock of the digital filter by the VW1F0 to VW1F1 bits in the VW1C register	Set the VW1C7 bit in the VW1C register to “1”
4(1)	Set the VW1C1 bit in the VW1C register to “0” (digital f ilter enabled).	Set the VW1C1 bit in the VW1C register to “1” (digital filter disabled)
5(1)	Set the VW1C6 bit in the VW1C register to “1” (voltage monitor 1 reset mode)	
6	Set the VW1C2 bit in the VW1C register to “0”	
7	Set the CM14 bit in the CM1 register to “0” (low-speed on-chip oscillator on)	–
8	Wait for the sampling clock of the digital filter x 4 cycles	– (no wait time)
9	Set the VW1C0 bit in the VW1C register to “1” (enables voltage monitor 1 reset)	

NOTES:

1. When the VW1C0 bit is set to “0” (disabled), procedures 3, 4 and 5 can be executed simultaneously (with 1 instruction).

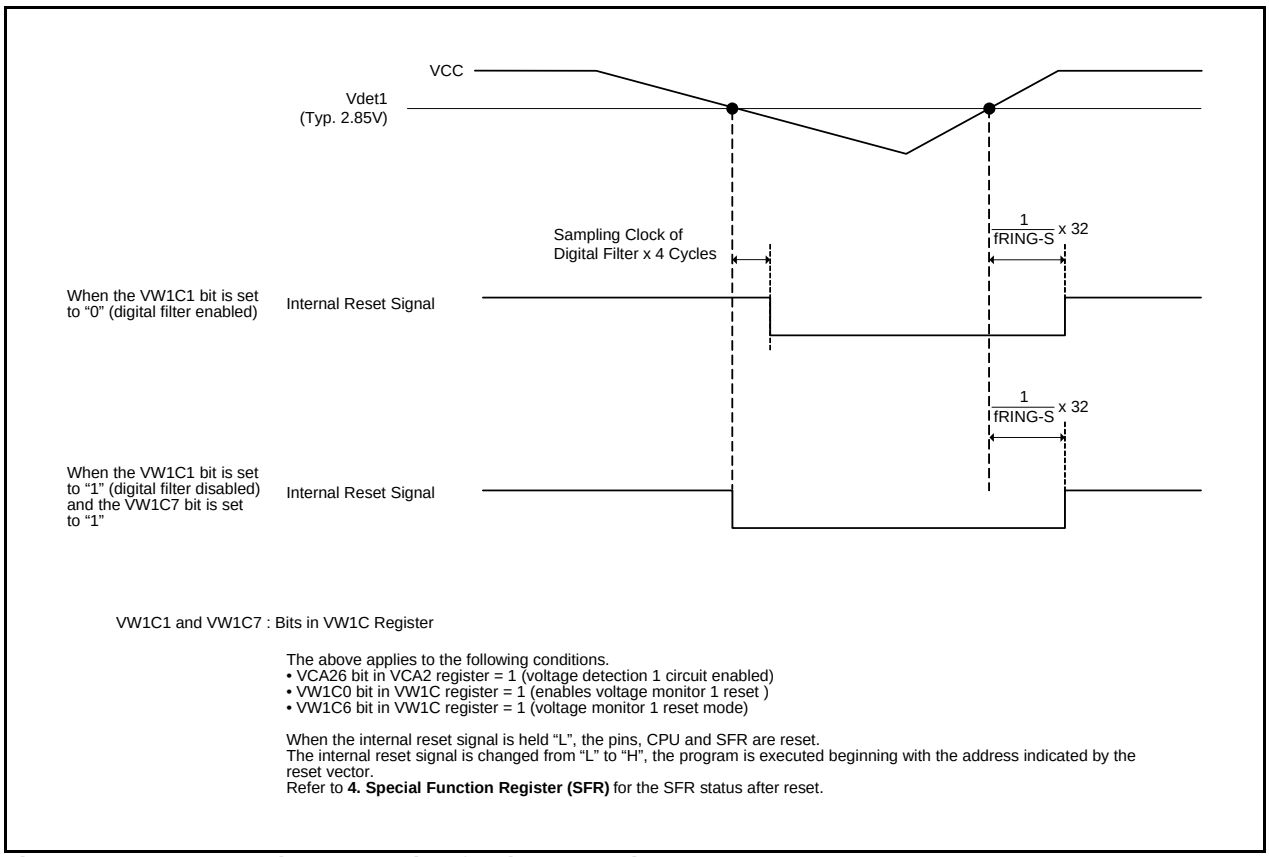

Figure 6.7 Operating Example of Voltage Monitor 1 Reset

6.3 Voltage Monitor 2 Interrupt and Voltage Monitor 2 Reset

Table 6.3 lists the Setting Procedure of Voltage Monitor 2 Interrupt and Voltage Monitor 2 Reset Associated Bit. Figure 6.8 shows the Operating Example of Voltage Monitor 2 Interrupt and Voltage Monitor 2 Reset. When using the voltage monitor 2 interrupt or voltage monitor 2 reset to exit stop mode, set the VW2C1 bit in the VW2C register to “1” (digital filter disabled).

Table 6.3 Setting Procedure of Voltage Monitor 2 Interrupt and Voltage Monitor 2 Reset Associated Bit

Procedure	When Using Digital Filter		When Not Using Digital Filter	
	Voltage Monitor 2 Interrupt	Voltage Monitor 2 Reset	Voltage Monitor 2 Interrupt	Voltage Monitor 2 Reset
1	Set the VCA27 bit in the VCA2 register to “1” (voltage detection 2 circuit enabled)			
2	Wait for td(E-A)			
3(2)	Select the sampling clock of the digital filter by the VW2F0 to VW2F1 bits in the VW2C register		Select the timing of the interrupt and reset request by the VW2C7 bit in the VW2C register(1)	
4(2)	Set the VW2C1 bit in the VW2C register to “0” (digital filter enabled)		Set the VW2C1 bit in the VW2C register to “1” (digital filter disabled)	
5(2)	Set the VW2C6 bit in the VW2C register to “0” (voltage monitor 2 interrupt mode)	Set the VW2C6 bit in the VW2C register to “1” (voltage monitor 2 reset mode)	Set the VW2C6 bit in the VW2C register to “0” (voltage monitor 2 interrupt mode)	Set the VW2C6 bit in the VW2C register to “1” (voltage monitor 2 reset mode)
6	Set the VW2C2 bit in the VW2C register to “0” (passing of Vdet2 is not detected)			
7	Set the CM14 bit in the CM1 register to “0” (low-speed on-chip oscillator on)		–	
8	Wait for the sampling clock of the digital filter x 4 cycles		– (no wait time)	
9	Set the VW2C0 bit in the VW2C register to “1” (enables voltage monitor 2 interrupt / reset)			

NOTES:

1. Set the VW2C7 bit to “1” (when VCC reaches Vdet2 or below) for the voltage monitor 2 reset.
2. When the VW2C0 bit is set to “0” (disabled), procedures 3, 4 and 5 can be executed simultaneously (with 1 instruction).

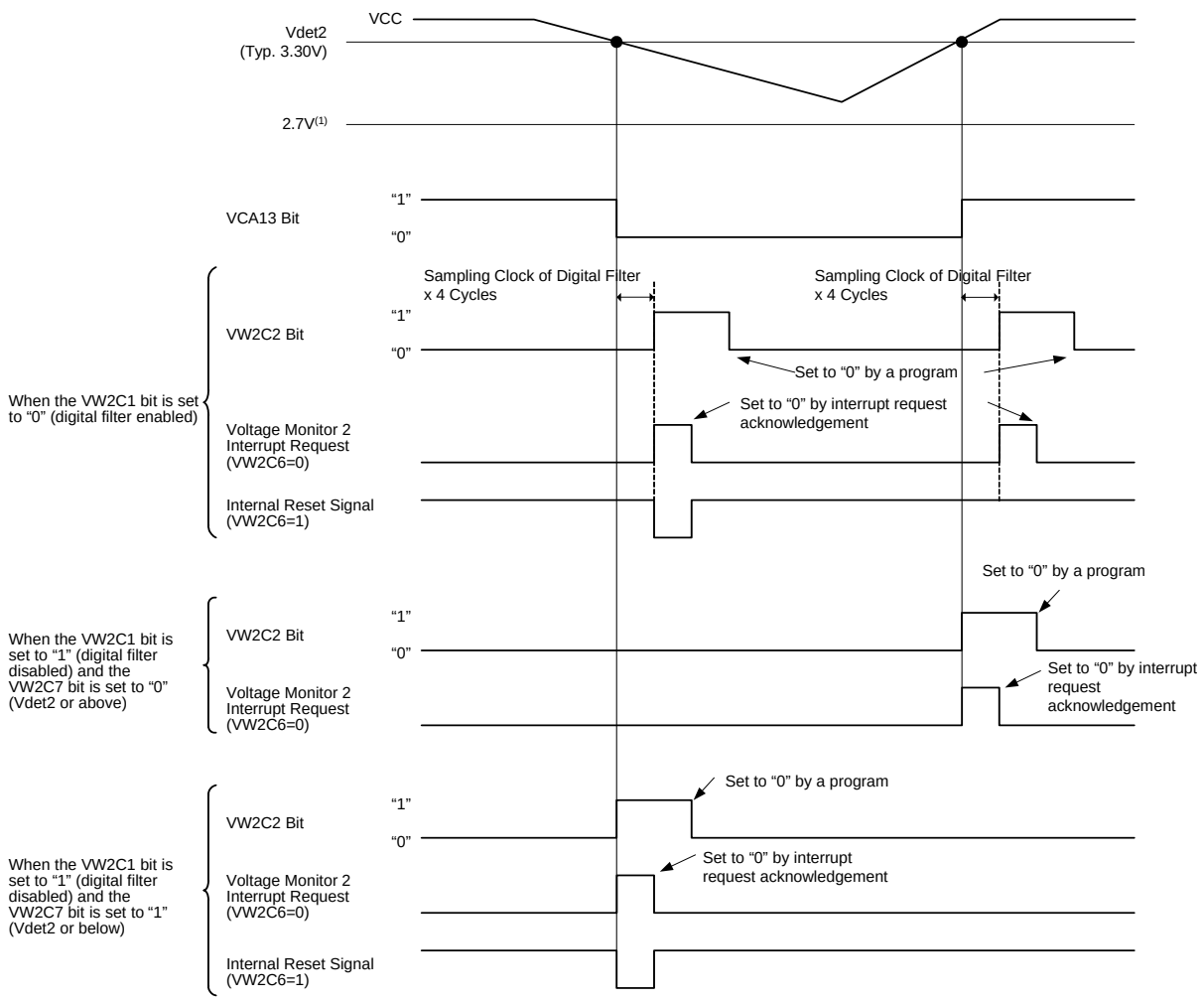

VCA13 : Bit in VCA1 Register
VW2C1, VW2C2, VW2C6, VW2C7 : Bit in VW2C Register

The above applies to the following conditions.
- VCA27 bit in VCA2 register = 1 (voltage detection 2 circuit enabled)
- VW2C0 bit in VW2C register = 1 (enables voltage monitor 2 interrupt and voltage monitor 2 reset)

NOTES:
1. When the voltage monitor 1 reset is not used, set the power supply to VCC ≥ 2.7.

Figure 6.8 Operating Example of Voltage Monitor 2 Interrupt and Voltage Monitor 2 Reset

7. Processor Mode

7.1 Types of Processor Mode

Single-chip mode can be selected as processor mode. Table 7.1 lists Features of Processor Mode. Figure 7.1 shows the PM0 Register and Figure 7.2 shows the PM1 Register.

Table 7.1 Features of Processor Mode

Processor Mode	Access Area	Pins to which I/O ports are assigned
Single-Chip Mode	SFR, Internal RAM, Internal ROM	All pins are I/O ports or peripheral function I/O pins

Processor Mode Register 0(1)

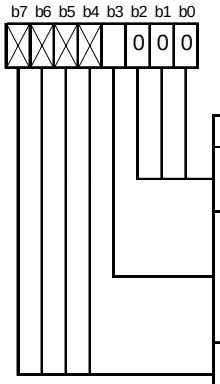

Symbol	Address	After Reset
PM0	0004h	00h

Bit Symbol	Bit Name	Function	RW
— (b2-b0)	Reserved Bit	Set to “0”	RW
PM03	Software Reset Bit	The microcomputer is reset when this bit is set to “1”. When read, its content is “0”.	RW
— (b7-b4)	Nothing is assigned. When write, set to “0”. When read, its content is “0”.		—

NOTES :

1. Set the PRC1 bit in the PRCR register to “1” (write enable) before rewriting to this register.

Figure 7.1 PM0 Register

Processor Mode Register 1[1]

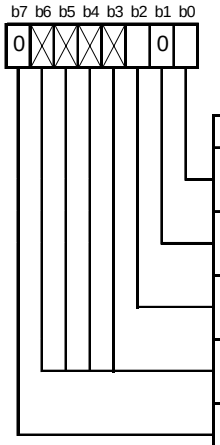

Symbol	Address	After Reset
PM1	0005h	00h

Bit Symbol	Bit Name	Function	RW
— (b0)	Nothing is assigned. When write, set to “0”. When read, its content is indeterminate.		—
— (b1)	Reserved Bit	Set to “0”	RW
PM12	WDT Interrupt/Reset Switch Bit	0 : Watchdog Timer Interrupt 1 : Watchdog Timer Reset[2]	RW
— (b6-b3)	Nothing is assigned. When write, set to “0”. When read, its content is “0”.		—
— (b7)	Reserved Bit	Set to “0”	RW

NOTES :

1. Set the PRC1 bit in the PRCR register to “1” (write enable) before rewriting to this register.
2. The PM12 bit is set to “1” by a program (It remains unchanged even if it is set to “0”).
   When the CSPRO bit in the CSPR register is set to “1” (selects count source protect mode), the PM12 bit is automatically set to “1”.

Figure 7.2 PM1 Register

8. Bus

During access, the ROM/RAM and SFR vary from bus cycles. Table 8.1 lists Bus Cycles for Access Space of the R8C/14 Group and Table 8.2 lists Bus Cycles for Access Space of the R8C/15 Group.
The ROM/RAM and SFR are connected to the CPU through an 8-bit bus. When accessing in word-(16 bits) unit, these area are accessed twice in 8-bit unit. Table 8.3 lists Access Unit and Bus Operation.

Table 8.1 Bus Cycles for Access Space of the R8C/14 Group

Access Area	Bus Cycle
SFR	2 cycles of CPU clock
ROM/RAM	1 cycle of CPU clock

Table 8.2 Bus Cycles for Access Space of the R8C/15 Group

Access Area	Bus Cycle
SFR/Data flash	2 cycles of CPU clock
Program ROM/RAM	1 cycle of CPU clock

Table 8.3 Access Unit and Bus Operation

Area	SFR, Data flash	ROM (Program ROM), RAM
Even Address Byte Access	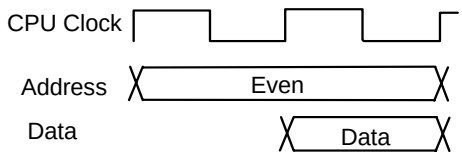	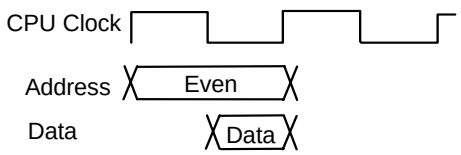
Odd Address Byte Access	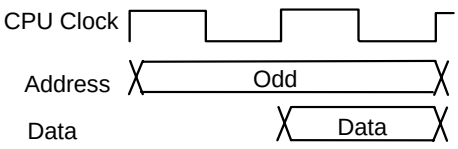	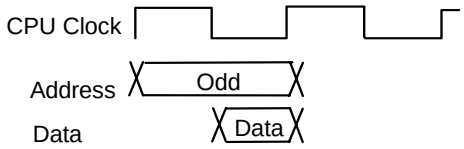
Even Address Word Access	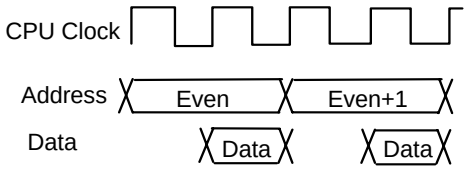	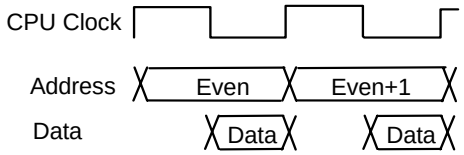
Odd Address Word Access	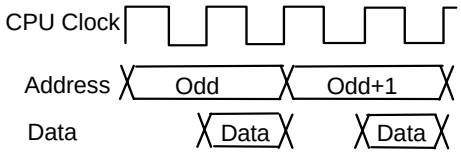	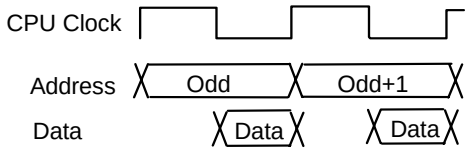

9. Clock Generation Circuit

The MCU has two on-chip clock generation circuits:

- Main clock oscillation circuit
- On-chip oscillator (oscillation stop detection function)

Table 9.1 lists Specification of Clock Generation Circuit. Figure 9.1 shows a Clock Generation Circuit. Figures 9.2 to 9.5 show clock-associated registers.

Table 9.1 Specification of Clock Generation Circuit

Item	Main Clock Oscillation Circuit	On-Chip Oscillator	
		High-Speed On-Chip Oscillator	Low-Speed On-Chip Oscillator
Use of Clock	• CPU clock source • Peripheral function clock source	• CPU clock source • Peripheral function clock source • CPU and peripheral function clock sources when main clock stops oscillating	• CPU clock source • Peripheral function clock source • CPU and peripheral function clock sources when main clock stops oscillating
Clock Frequency	0 to 20MHz	Approx. 8MHz	Approx. 125kHz
Connectable Oscillator	• Ceramic resonator • Crystal oscillator	–	–
Oscillator Connect Pins	XIN, XOUT(1)	(Note 1)	(Note 1)
Oscillation Stop, Restart Function	Usable	Usable	Usable
Oscillator Status After Reset	Stop	Stop	Oscillate
Others	Externally generated clock can be input	–	–

NOTES:

1. This pin can be used as P4_6 and P4_7 when using the on-chip oscillator clock for a CPU clock while the main clock oscillation circuit is not used.

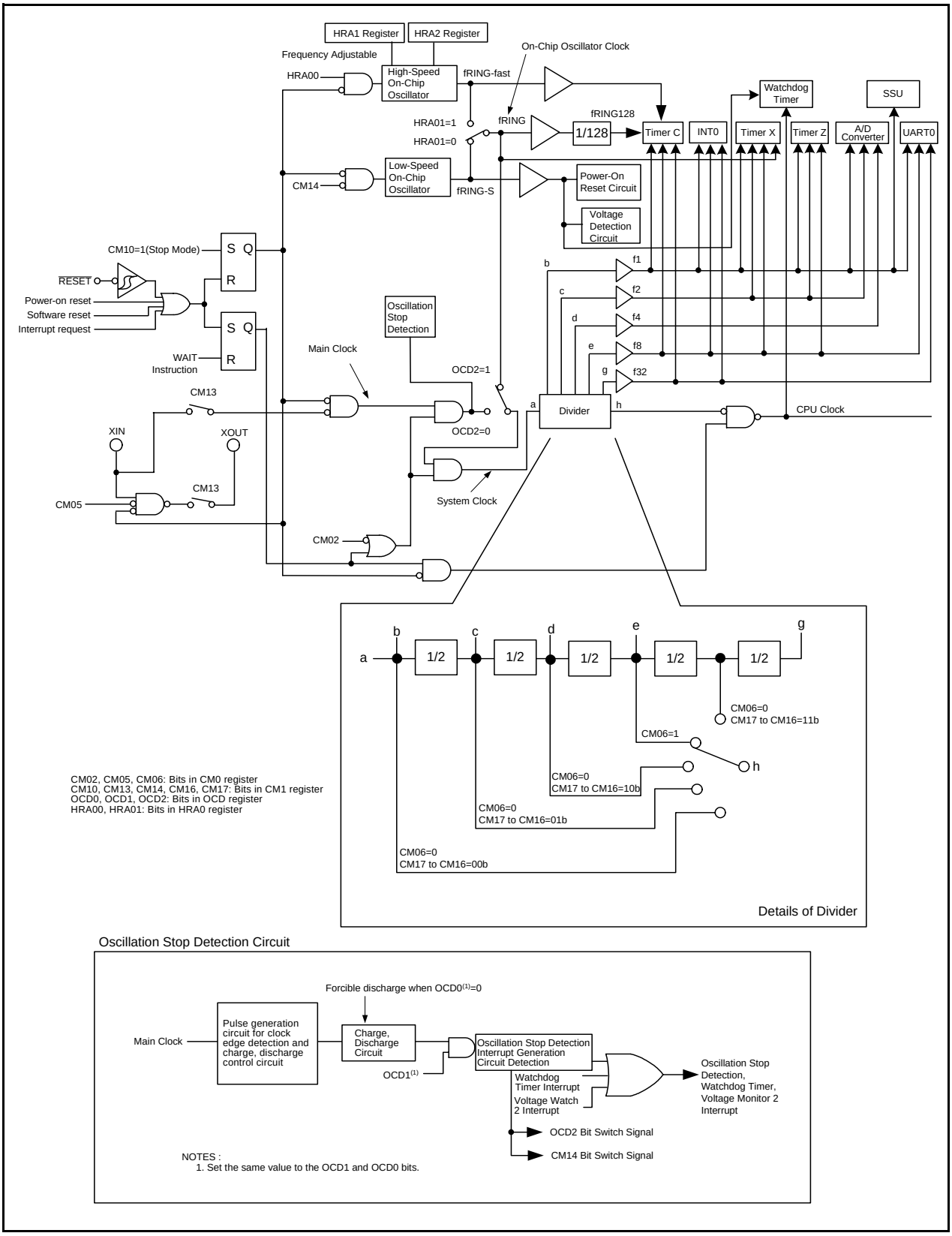

Figure 9.1 Clock Generation Circuit

System Clock Control Register 0[1]

b7	b6	b5	b4	b3	b2	b1	b0
0			0	1		0	0

Symbol	Address	After Reset
CM0	0006h	68h

Bit Symbol	Bit Name	Function	RW
— (b1-b0)	Reserved Bit	Set to “0”	RW
CM02	WAIT Peripheral Function Clock Stop Bit	0 : Peripheral function clock does not stop in wait mode 1 : Peripheral function clock stops in wait mode	RW
— (b3)	Reserved Bit	Set to “1”	RW
— (b4)	Reserved Bit	Set to “0”	RW
CM05	Main Clock (XIN-XOUT) Stop Bit[2,4]	0 : Main clock oscillates 1 : Main clock stops[3]	RW
CM06	System Clock Division Select Bit 0[5]	0 : Enables CM16, CM17 1 : Divide-by-8 mode	RW
— (b7)	Reserved Bit	Set to “0”	RW

NOTES :

1. Set the PRC0 bit in the PRCR register to “1” (write enable) before rewriting to this register.
2. The CM05 bit is to stop the main clock when the on-chip oscillator mode is selected.
   Do not use this bit for whether the main clock is stopped. To stop the main clock, set the bits in the following orders:
   (a) Set the OCD1 to OCD0 bits in the OCD register to “00b” (oscillation stop detection function disabled).
   (b) Set the OCD2 bit to “1” (selects on-chip oscillator clock).
3. Set the CM05 bit to “1” (main clock stops) and the CM13 bit in the CM1 register to “1” (XIN-XOUT pin) when the external clock is input.
4. When the CM05 bit is set to “1” (stops main clock), P4_6 and P4_7 can be used as input ports.
5. When entering stop mode from high or middle speed mode, the CM06 bit is set to “1” (divide-by-8 mode).

Figure 9.2 CM0 Register

System Clock Control Register 1[1]

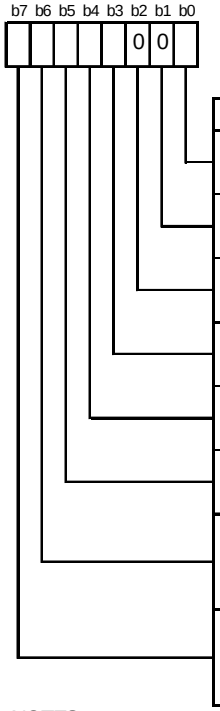

Symbol	Address	After Reset
CM1	0007h	20h

Bit Symbol	Bit Name	Function	RW
CM10	All Clock Stop Control Bit[4,7,8]	0 : Oscillates clock 1 : Stops all Clocks (stop mode)	RW
— (b1)	Reserved Bit	Set to “0”	RW
— (b2)	Reserved Bit	Set to “0”	RW
CM13	Port XIN-XOUT Switch Bit[7]	0 : Input port P4_6, P4_7 1 : XIN-XOUT Pin	RW
CM14	Low-Speed On-Chip Oscillation Stop Bit[5,6,8]	0 : Low-speed on-chip oscillator on 1 : Low-speed on-chip oscillator off	RW
CM15	XIN-XOUT Drive Capacity Select Bit[2]	0 : LOW 1 : HIGH	RW
CM16	System Clock Division Select Bit 1[3]	b7 b6 0 0 : No division mode 0 1 : Divide-by-2 mode 1 0 : Divide-by-4 mode 1 1 : Divide-by-16 mode	RW
CM17			RW

NOTES :

1. Set the PRC0 bit in the PRCR register to “1” (write enable) before rewriting to this register.
2. When entering stop mode from high or middle speed mode, this bit is set to “1” (drive capacity HIGH).
3. When the CM06 bit is set to “0” (CM16, CM17 bits enabled), this bit becomes enabled.
4. If the CM10 bit is “1” (stop mode), the internal feedback resistor becomes disabled.
5. When the OCD2 bit is set to “0” (selects main clock), the CM14 bit is set to “1” (stops low-speed on-chip oscillator). When the OCD2 bit is set to “1” (selects on-chip oscillator clock), the CM14 bit is set to “0” (low-speed on-chip oscillator on). It remains unchanged even if it is set to “1”.
6. When using the voltage detection interrupt, CM14 bit is set to “0” (low-speed on-chip oscillator on).
7. When the CM10 bit is set to “1” (stop mode) or the CM05 bit in the CM0 register to “1” (main clock stops) and the CM13 bit is set to “1” (XIN-XOUT pin), the XOUT (P4_7) pin becomes “H”.
   When the CM13 bit is set to “0” (input ports, P4_6, P4_7), the P4_7 (XOUT) enters input mode.
8. In count source protect mode (Refer to **12.2 Count Source Protect Mode**), the value remains unchanged even if the CM10 and CM14 bits are set.

Figure 9.3 CM1 Register

Oscillation Stop Detection Register(1)

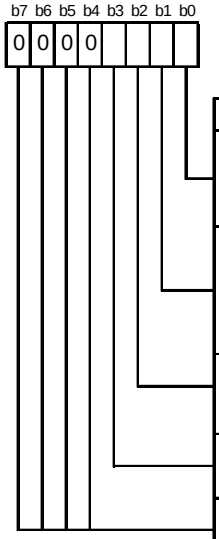

Symbol	Address	After Reset
OCD	000Ch	04h

Bit Symbol	Bit Name	Function	RW
OCD0	Oscillation Stop Detection Enable Bit	b1 b0 0 0 : Oscillation stop detection function disabled 0 1 : Do not set 1 0 : Do not set 1 1 : Oscillation stop detection function enabled(4,7)	RW
OCD1			RW
OCD2	System Clock Select Bit(6)	0 : Selects main clock(7) 1 : Selects on-chip oscillator clock(2)	RW
OCD3	Clock Monitor Bit(3,5)	0 : Main clock oscillates 1 : Main clock stops	RO
— (b7-b4)	Reserved Bit	Set to “0”	RW

NOTES :

1. Set the PRC0 bit in the PRCR register to “1” (write enable) before rewriting to this register.
2. The OCD2 bit is automatically set to “1” (selects on-chip oscillator clock) if a main clock oscillation stop is detected while the OCD1 to OCD0 bits are set to “11b” (oscillation stop detection function enabled). If the OCD3 bit is set to “1” (main clock stops), the OCD2 bit remains unchanged when writing “0” (selects main clock).
3. The OCD3 bit is enabled when the OCD1 to OCD0 bits are set to “11b”.
4. Set the OCD1 to OCD0 bits to “00b” (oscillation stop detection function disabled) before entering stop and on-chip oscillator mode (main clock stops).
5. The OCD3 bit remains “0” (main clock oscillates) if the OCD1 to OCD0 bits are set to “00b”.
6. The CM14 bit is set to “0” (low-speed on-chip oscillator on) if the OCD2 bit is set to “1” (selects on-chip oscillator clock).
7. Refer to **Figure 9.9 Procedure of Switching Clock Source From Low-Speed On-Chip Oscillator to Main Clock** for the switching procedure when the main clock re-oscillates after detecting an oscillation stop.

Figure 9.4 OCD Register

High-speed On-Chip Oscillator Control Register 0[1]

b7	b6	b5	b4	b3	b2	b1	b0
0	0	0	0	0	0		

Symbol	Address	After Reset
HRA0	0020h	00h

Bit Symbol	Bit Name	Function	RW
HRA00	High-Speed On-Chip Oscillator Enable Bit	0 : High-speed on-chip oscillator off 1 : High-speed on-chip oscillator on	RW
HRA01	High-speed On-Chip Oscillator Select Bit[2]	0 : Selects low-speed on-chip oscillator[3] 1 : Selects high-speed on-chip oscillator	RW
— (b7-b2)	Reserved Bit	Set to “0”	RW

NOTES :

1. Set the PRC0 bit in the PRCR register to “1” (write enable) before rewriting to this register.
2. Change the HRA01 bit under the following conditions.
   - HRA00 = 1 (high-speed on-chip oscillation)
   - The CM14 bit in the CM1 register = 0 (low-speed on-chip oscillator on)
3. When setting the HRA01 bit to “0” (selects low-speed on-chip oscillator), do not set the HRA00 bit to “0” (high-speed on-chip oscillator off) at the same time.
   Set the HRA00 bit to “0” after setting the HRA01 bit to “0”.

Figure 9.5 HRA0 Register

High-speed On-Chip Oscillator Control Register 1[1]

b7 b6 b5 b4 b3 b2 b1 b0

Symbol	Address	After Reset
HRA1	0021h	When Shipping

Function	RW
The frequency of high-speed on-chip oscillator is adjusted with bits 0 to 7. High-speed on-chip oscillator frequency = 8MHz (HRA1 register = value when shipping ; fRING-fast mode 0) Set the value of the HRA1 register to smaller (minimum value : 00h), the frequency will be higher Set the value of the HRA1 register to larger (maximum value : FFh), the frequecny will be lower	RW

NOTES :

1. Set the PRC0 bit in the PRCR register to "1" (write enable) before rewriting to this register.

High-Speed On-Chip Oscillator Control Register 2[1]

b7 b6 b5 b4 b3 b2 b1 b0

Symbol	Address	After Reset
HRA2	0022h	00h

Bit Symbol	Bit Name	Function	RW
HRA20	High-Speed On-Chip Oscillator Mode Select Bit	b1 b0 0 0 : fRING-fast mode 0[2] 0 1 : fRING-fast mode 1[3] 1 0 : fRING-fast mode 2[4] 1 1 : Do not set	RW
HRA21			RW
— (b4-b2)	Reserved Bit	Set to "0"	RW
— (b7-b5)	Nothing is assigned. When write, set to "0". When read, its content is "0".		—

NOTES :

1. Set the PRC0 bit in the PRCR register to "1" (write enable) before rewriting to this register.
2. High-speed on-chip oscillator frequency = 8MHz (HRA1 register = value when shipping)
3. If fRING-fast mode 0 is switched to fRING-fast mode 1, frequency will increase 1.5 times.
4. If fRING-fast mode 0 is switched to fRING-fast mode 2, frequency will increase 0.5 times.

Figure 9.6 HRA1 and HRA2 Registers

The following describes the clocks generated by the clock generation circuit.

9.1 Main Clock

This clock is supplied by a main clock oscillation circuit. This clock is used as the clock source for the CPU and peripheral function clocks. The main clock oscillation circuit is configured by connecting a resonator between the XIN and XOUT pins. The main clock oscillation circuit contains a feedback resistor, which is disconnected from the oscillation circuit in stop mode in order to reduce the amount of power consumed in the chip. The main clock oscillation circuit may also be configured by feeding an externally generated clock to the XIN pin. Figure 9.7 shows the Examples of Main Clock Connection Circuit.

During reset and after reset, the main clock stops.

The main clock starts oscillating when the CM05 bit in the CM0 register is set to “0” (main clock on) after setting the CM13 bit in the CM1 register to “1” (XIN- XOUT pin).

To use the main clock for the CPU clock source, set the OCD2 bit in the OCD register to “0” (select main clock) after the main clock is oscillating stably.

The power consumption can be reduced by setting the CM05 bit in the CM0 register to “1” (stop main clock) if the OCD2 bit is set to “1” (select on-chip oscillator clock).

When the clocks externally generated to the XIN pin are input, a main clock does not stop if setting the CM05 bit to “1”. If necessary, use an external circuit to stop the clock.

In stop mode, all clocks including the main clock stop. Refer to **9.4 Power Control** for details.

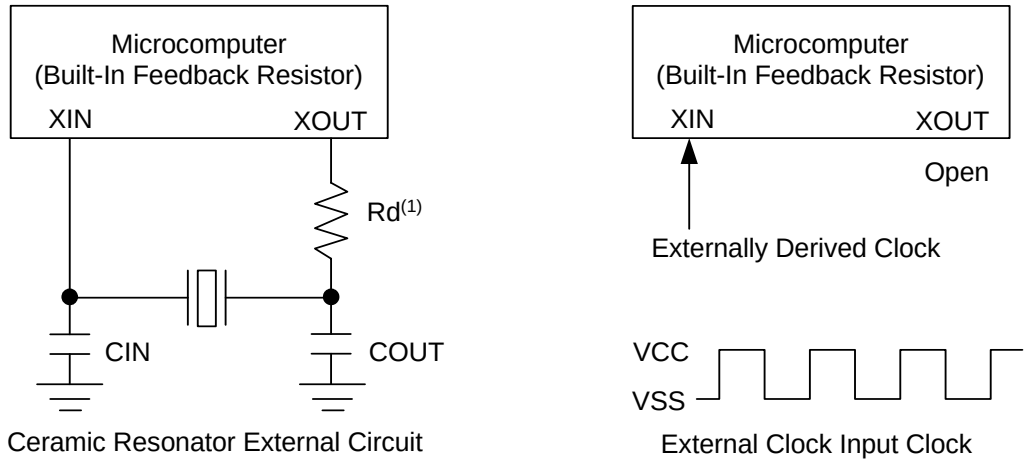

NOTES :
1. Insert a damping resistor if required. The resistance will vary depending on the oscillator and the oscillation drive capacity setting. Use the value recommended by the maker of the oscillator.
When the oscillation drive capacity is set to low, check that oscillation is stable. Also, if the oscillator manufacturer's data sheet specifies that a feedback resistor be added external to the chip, insert a feedback resistor between XIN and XOUT following the instruction.

Figure 9.7 Examples of Main Clock Connection Circuit

9.2 On-Chip Oscillator Clock

This clock is supplied by an on-chip oscillator. The on-chip oscillator contains a high-speed on-chip oscillator and a low-speed on-chip oscillator. Either an on-chip oscillator clock is selected by the HRA01 bit in the HRA0 register.

9.2.1 Low-Speed On-Chip Oscillator Clock

The clock generated by the low-speed on-chip oscillator is used as the clock source for the CPU clock, peripheral function clock, fRING, fRING128 and fRING-S.
After reset, the on-chip oscillator clock generated by the low-speed on-chip oscillator by divide-by-8 is selected for the CPU clock.
If the main clock stops oscillating when the OCD1 to OCD0 bits in the OCD register are set to “11b” (oscillation stop detection function enabled), the low-speed on-chip oscillator automatically starts operating, supplying the necessary clock for the microcomputer.
The frequency of the low-speed on-chip oscillator varies depending on the supply voltage and the operating ambient temperature. The application products must be designed with sufficient margin for the frequency change.

9.2.2 High-Speed On-Chip Oscillator Clock

The clock generated by the high-speed on-chip oscillator is used as the clock source for the CPU clock, peripheral function clock, fRING, fRING128, and fRING1-fast.
After reset, the on-chip oscillator clock generated by the high-speed on-chip oscillator stops. The oscillation starts by setting the HRA00 bit in the HRA0 register to “1” (high-speed on-chip oscillator on). The frequency can be adjusted by the HRA1 and HRA2 registers.
Since the difference in delay between the bits, adjust by changing each bit.

9.3 CPU Clock and Peripheral Function Clock

There are two type clocks: a CPU clock to operate the CPU and a peripheral function clock to operate the peripheral functions. Refer to Figure 9.1 Clock Generation Circuit.

9.3.1 System Clock

The system clock is a clock source for the CPU and peripheral function clocks. The main clock or on-chip oscillator clock can be selected.

9.3.2 CPU Clock

The CPU clock is an operating clock for the CPU and watchdog timer.
The system clock can be the divide-by-1 (no division), 2, 4, 8 or 16 to produce the CPU clock. Use the CM06 bit in the CM0 register and the CM16 to CM17 bits in the CM1 register to select the value of the division.
After reset, the low-speed on-chip oscillator clock divided-by-8 provides the CPU clock.
When entering stop mode from high-speed or medium-speed mode, the CM06 bit is set to “1” (divide-by-8 mode).

9.3.3 Peripheral Function Clock (f1, f2, f4, f8, f32)

The peripheral function clock is operating clock for the peripheral functions.
The clock fi (i=1, 2, 4, 8, 32) is generated by the system clock divided-by-i. The clock fi is used for timers X, Y, Z, C, serial interface and A/D converter.
When the WAIT instruction is executed after setting the CM02 bit in the CM0 register to “1” (peripheral function clock stops in wait mode), the clock fi stops.

9.3.4 fRING and fRING128

fRING and fRING128 are operating clocks for the peripheral functions.
The fRING runs at the same frequency as the on-chip oscillator clock and can be used as the source for the timer X. The fRING128 is generated by the fRING by dividing it by 128 and can be used for the timer C.
When the WAIT instruction is executed, the clocks fRING and fRING128 do not stop.

9.3.5 fRING-fast

fRING-fast is used as the count source for the timer C. The fRING-fast is generated by the high-speed on-chip oscillator and provided by setting the HRA00 bit to “1”.
When the WAIT instruction is executed, the clock fRING-fast does not stop.

9.3.6 fRING-S

fRING-S is an operating clock for the watchdog timer and voltage detection circuit. When setting the CM14 bit to “0” (low-speed on-chip oscillator on) using the clock generated by the low-speed on-chip oscillator, the fRING-S can be provided. When the WAIT instruction is executed or in count source protect mode of the watchdog timer, fRING-S does not stop.

9.4 Power Control

There are three power control modes. All modes other than wait and stop modes are referred to as normal operating mode.

9.4.1 Normal Operating Mode

Normal operating mode is further separated into four modes.
In normal operating mode, the CPU clock and the peripheral function clock are supplied to operate the CPU and the peripheral function clocks. Power consumption control is enabled by controlling the CPU clock frequency. The higher the CPU clock frequency, the more processing power increases. The lower the CPU clock frequency, the more power consumption decreases. When unnecessary oscillator circuits stop, power consumption is further reduced.
Before the clock sources for the CPU clock can be switched over, the new clock source after switching needs to be stabilized and oscillated. If the new clock source is the main clock, allow sufficient wait time in a program until an oscillation is stabilized before exiting.

Table 9.2 Setting and Mode of Clock Associated Bit

Modes		OCD Register	CM1 Register		CM0 Register	
		OCD2	CM17, CM16	CM13	CM06	CM05
High-Speed Mode		0	00b	1	0	0
Medium-Speed Mode	divide-by-2	0	01b	1	0	0
	divide-by-4	0	10b	1	0	0
	divide-by-8	0	–	1	1	0
	divide-by-16	0	11b	1	0	0
High-Speed, Low-Speed On-Chip Oscillator Mode(1)	no division	1	00b	–	0	–
	divide-by-2	1	01b	–	0	–
	divide-by-4	1	10b	–	0	–
	divide-by-8	1	–	–	1	–
	divide-by-16	1	11b	–	0	–

NOTES:
1. The low-speed on-chip oscillator is used as the on-chip oscillator clock when the CM14 bit in the CM1 register is set to “0” (low-speed on-chip oscillator on) and the HRA01 bit in the HRA0 register is set to “0”. The high-speed on-chip oscillator is used as the on-chip oscillator clock when the HRA00 bit in the HRA0 register is set to “1” (high-speed on-chip oscillator A on) and the HRA01 bit in the HRA0 register is set to “1”.

9.4.1.1 High-Speed Mode

The main clock divided-by-1 (no division) provides the CPU clock. If the CM14 bit is set to “0” (low-speed on-chip oscillator on) or the HRA00 bit in the HRA0 register is set to “1” (high-speed on-chip oscillator on), the fRING and fRING128 can be used for timers X and C. When the HRA00 bit is set to “1”, fRING-fast can be used for timer C. When the CM14 bit is set to “0” (low-speed on-chip oscillator on), fRING-S can be used for the watchdog timer and voltage detection circuit.

9.4.1.2 Medium-Speed Mode

The main clock divided-by-2, -4, -8 or -16 provides the CPU clock. If the CM14 bit is set to “0” (low-speed on-chip oscillator on) or the HRA00 bit in the HRA0 register is set to “1” (high-speed on-chip oscillator on), the fRING and fRING128 can be used for timers X and C. When the HRA00 bit is set to “1”, fRING-fast can be used for timer C. When the CM14 bit is set to “0” (low-speed on-chip oscillator on), fRING-S can be used for the watchdog timer and voltage detection circuit.

9.4.1.3 High-Speed, Low-Speed On-Chip Oscillator Mode

The on-chip oscillator clock divided-by-1 (no division), -2, -4, -8 or -16 provides the CPU clock. The on-chip oscillator clock is also the clock source for the peripheral function clocks. When the HRA00 bit is set to “1”, fRING-fast can be used for timer C. When the CM14 bit is set to “0” (low-speed on-chip oscillator on), fRING-S can be used for the watchdog timer and voltage detection circuit.

9.4.2 Wait Mode

Since the CPU clock stops in wait mode, the CPU operated in the CPU clock and the watchdog timer when count source protection mode is disabled stops. The main clock and on-chip oscillator clock do not stop and the peripheral functions using these clocks maintain operating.

9.4.2.1 Peripheral Function Clock Stop Function

If the CM02 bit is set to “1” (peripheral function clock stops in wait mode), the f1, f2, f4, f8 and f32 clocks stop in wait mode. The power consumption can be reduced.

9.4.2.2 Entering Wait Mode

The microcomputer enters wait mode by executing the WAIT instruction.

9.4.2.3 Pin Status in Wait Mode

The status before entering wait mode is maintained.

9.4.2.4 Exiting Wait Mode

The microcomputer exits wait mode by a hardware reset or peripheral function interrupt. When using a hardware reset to exit wait mode, set the ILVL2 to ILVL0 bits for the peripheral function interrupts to “000b” (interrupts disabled) before executing the WAIT instruction.
The peripheral function interrupts are affected by the CM02 bit. When the CM02 bit is set to “0” (peripheral function clock does not stop in wait mode), all peripheral function interrupts can be used to exit wait mode. When the CM02 bit is set to “1” (peripheral function clock stops in wait mode), the peripheral functions using the peripheral function clock stop operating and the peripheral functions operated by external signals can be used to exit wait mode.
Table 9.3 lists Interrupts to Exit Wait Mode and Usage Conditions.
When using a peripheral function interrupt to exit wait mode, set up the following before executing the WAIT instruction.

(1) Set the interrupt priority level to the ILVL2 to ILVL0 bits in the interrupt control register of the peripheral function interrupts to use for exiting wait mode. Set the ILVL2 to ILVL0 bits of the peripheral function interrupts not to use for exiting wait mode to “000b” (disables interrupt).
(2) Set the I flag to “1”.
(3) Operate the peripheral function to use for exiting wait mode.

When an interrupt request is generated and the CPU clock supply is started if exiting by the peripheral function interrupt, an interrupt sequence is executed.
The CPU clock, when exiting wait mode by a peripheral function interrupt, is the same clock as the CPU clock when the WAIT instruction is executed.

Table 9.3 Interrupts to Exit Wait Mode and Usage Conditions

Interrupt	CM02=0	CM02=1
Serial Interface Interrupt	Usable when operating with internal or external clock	Usable when operating with external clock
SSU Interrupt	Usable in all modes	–(Do not use)
Key Input Interrupt	Usable	Usable
A/D Conversion Interrupt	Usable in one-shot mode	–(Do not use)
Timer X Interrupt	Usable in all modes	Usable in event counter mode
Timer Z Interrupt	Usable in all modes	–(Do not use)
Timer C Interrupt	Usable in all modes	–(Do not use)
$\overline{\text{INT}}$ Interrupt	Usable	Usable ($\overline{\text{INT0}}$ and $\overline{\text{INT3}}$ can be used if there is no filter.
Voltage Monitor 2 Interrupt	Usable	Usable
Oscillation Stop Detection Interrupt	Usable	–(Do not use)
Watchdog Timer Interrupt	Usable in count source protect mode	Usable in count source protect mode

9.4.3 Stop Mode

Since the oscillator circuits stop in wait mode, the CPU clock and peripheral function clock stop and the CPU and peripheral functions clocked by these clocks stop operating. The least power required to operate the microcomputer is in stop mode. If the voltage applied to the VCC pin is VRAM or more, the internal RAM is maintained.
The peripheral functions clocked by external signals maintain operating. Table 9.4 lists Interrupts to Exit Stop Mode and Usage Conditions.

Table 9.4 Interrupts to Exit Stop Mode and Usage Conditions

Interrupt	Usage Conditions
Key Input Interrupt	–
$\overline{\text{INT0}}$ to $\overline{\text{INT1}}$ Interrupts	$\overline{\text{INT0}}$ can be used if there is no filter
$\overline{\text{INT3}}$ Interrupt	No filter. Interrupt request is generated at $\overline{\text{INT3}}$ input. (TCC06 bit in TCC0 register is set to “1”)
Timer X Interrupt	When external pulse is counted in event counter mode
Serial Interface Interrupt	When external clock is selected
Voltage Monitor 2 Interrupt	Usable in digital filter disabled mode (VW2C1 bit in VW2C register is set to “1”)

9.4.3.1 Entering Stop Mode

The microcomputer enters stop mode by setting the CM10 bit in the CM1 register to “1” (all clocks stop). At the same time, the CM06 bit in the CM0 register is set to “1” (divide-by-8 mode) and the CM15 bit in the CM10 register is set to “1” (drive capability HIGH of main clock oscillator circuit).
When using stop mode, set the OCD1 to OCD0 bits to “00b” (oscillation stop detection function disabled) before entering stop mode.

9.4.3.2 Pin Status in Stop Mode

The status before entering wait mode is maintained.
However, when the CM13 bit in the CM1 register is set to “1” (XIN-XOUT pins), the XOUT(P4_7) pin is held “H”. When the CM13 bit is set to “0” (input port P4_6 and P4_7), the P4_7(XOUT) is held in input status.

9.4.3.3 Exiting Stop Mode

The microcomputer exits stop mode by a hardware reset or peripheral function interrupt.
When using a hardware reset to exit stop mode, set the ILVL2 to ILVL0 bits for the peripheral function interrupts to “000b” (disables interrupts) before setting the CM10 bit to “1”.
When using a peripheral function interrupt to exit stop mode, set up the following before setting the CM10 bit to “1”.

(1) Set the interrupt priority level to the ILVL2 to ILVL0 bits of the peripheral function interrupts to use for exiting stop mode. Set the ILVL2 to ILVL0 bits of the peripheral function interrupts not to use for exiting stop mode to “000b” (disables interrupt).
(2) Set the I flag to “1”.
(3) Operates the peripheral function to use for exiting stop mode.
When an interrupt request is generated and the CPU clock supply is started if exiting by the peripheral function interrupt, an interrupt sequence is executed.

The CPU clock, when exiting stop mode by a peripheral function interrupt, is the divide-by-8 of the clock which is used before entering stop mode.

Figure 9.8 shows the State Transition of Power Control.

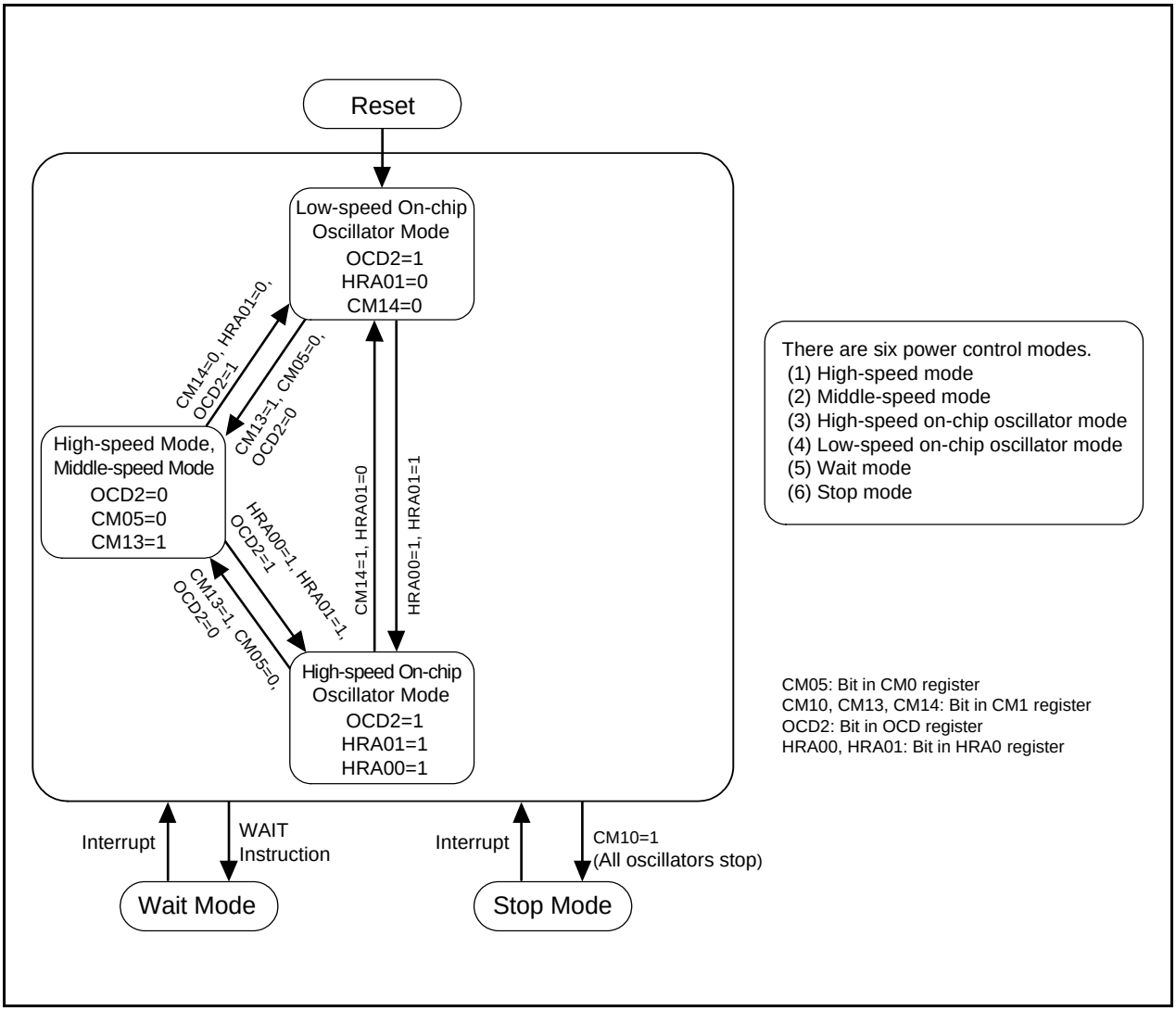

Figure 9.8 State Transition of Power Control

9.5 Oscillation Stop Detection Function

The oscillation stop detection function is a function to detect the stop of the main clock oscillating circuit. The oscillation stop detection function can be enabled and disabled by the OCD1 to OCD0 bits in the OCD register.
Table 9.5 lists the Specification of Oscillation Stop Detection Function.

When the main clock is the CPU clock source and the OCD1 to OCD0 bits are set to “11b” (oscillation stop detection function enabled), the system is placed in the following state if the main clock stops.

- OCD2 bit in OCD register = 1 (on-chip oscillator clock selected)
- OCD3 bit in OCD register = 1 (main clock stops)
- CM14 bit in CM1 register = 0 (low-speed on-chip oscillator oscillates)
- Oscillation stop detection interrupt request is generated

Table 9.5 Specification of Oscillation Stop Detection Function

Item	Specification
Oscillation Stop Detection Enable Clock and Frequency Bandwidth	f(XIN) ≥ 2 MHz
Enabled Condition for Oscillation Stop Detection Function	Set OCD1 to OCD0 bits to “11b” (oscillation stop detection function enabled)
Operation at Oscillation Stop Detection	Oscillation stop detection interrupt is generated

9.5.1 How to Use Oscillation Stop Detection Function

- The oscillation stop detection interrupt shares the vector with the voltage monitor 2 interrupt and the watchdog timer interrupt. When using the oscillation stop detection interrupt and watchdog timer interrupt, the interrupt cause needs to be determined. Table 9.6 lists the Determine Interrupt Factor of Oscillation Stop Detection, Watchdog Timer and Voltage Monitor 2 Interrupts.
- When the main clock is re-oscillated after oscillation stop, switch the main clock to the clock source of the CPU clock and peripheral functions by a program.
- Figure 9.9 shows the Procedure of Switching Clock Source From Low-Speed On-Chip Oscillator to Main Clock.
- To enter wait mode while using the oscillation stop detection function, set the CM02 bit to “0” (peripheral function clock does not stop in wait mode).
- Since the oscillation stop detection function is a function preparing to stop the main clock by the external cause, set the OCD1 to OCD0 bits to “00b” (oscillation stop detection function disabled) when the main clock stops or oscillates in the program, that is stop mode is selected or the CM05 bit is changed.
- This function cannot be used when the main clock frequency is below 2 MHz. Set the OCD1 to OCD0 bits to “00b” (oscillation stop detection function disabled).
- When using the low-speed on-chip oscillator clock for the CPU clock and clock sources of peripheral functions after detecting the oscillation stop, set the HRA01 bit in the HRA0 register to “0” (low-speed on-chip oscillator selected) and the OCD1 to OCD0 bits to “11b” (oscillation stop detection function enabled).
  When using the high-speed on-chip oscillator clock for the CPU clock and clock sources of peripheral functions after detecting the oscillation stop, set the HRA01 bit to “1” (high-speed on-chip oscillator selected) and the OCD1 to OCD0 bits to “11b” (oscillation stop detection function enabled).

Table 9.6 Determine Interrupt Factor of Oscillation Stop Detection, Watchdog Timer and Voltage Monitor 2 Interrupts

Generated Interrupt Cause	Bit Showing Interrupt Cause
Oscillation Stop Detection ((a) or (b))	(a) OCD3 bit in OCD register = 1
	(b) OCD1 to OCD0 bits in OCD register = 11b and the OCD2 bit = 1
Watchdog Timer	VW2C3 bit in VW2C register = 1
Voltage Monitor 2	VW2C2 bit in VW2C register = 1

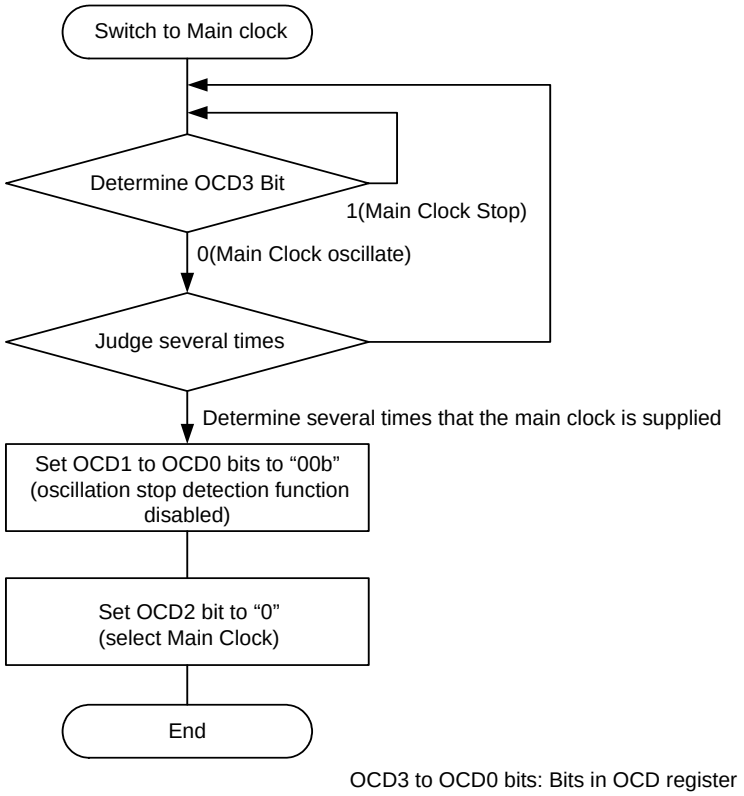

Figure 9.9 Procedure of Switching Clock Source From Low-Speed On-Chip Oscillator to Main Clock

10. Protection

Protection function protects important registers from being easily overwritten when a program runs out of control. Figure 10.1 shows the PRCR Register. The following lists the registers protected by the PRCR register.

- Registers protected by PRC0 bit : CM0, CM1, and OCD, HRA0, HRA1, HRA2 registers
- Registers protected by PRC1 bit : PM0 and PM1 registers
- Registers protected by PRC3 bit : VCA2, VW1C and VW2C registers

Protect Register

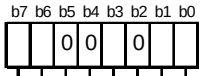

Symbol	Address	After Reset
PRCR	000Ah	00h

Bit Symbol	Bit Name	Function	RW
PRC0	Protect Bit 0	Writing to the CM0, CM, OCD, HRA0, HRA1 and HRA2 registers is enabled. 0 : Disables writing 1 : Enables writing	RW
PRC1	Protect Bit 1	Writing to the PM0 and PM1 registers is enabled. 0 : Disables writing 1 : Enables writing	RW
— (b2)	Reserved Bit	Set to “0”	RW
PRC3	Protect Bit 3	Writing to the VCA2, VW1C and VW2C registers is enabled. 0 : Disables writing 1 : Enables writing	RW
— (b5-b4)	Reserved Bit	Set to “0”	RW
— (b7-b6)	Reserved Bit	When read, its content is “0”.	RO

Figure 10.1 PRCR Register

11. Interrupt

11.1 Interrupt Overview

11.1.1 Types of Interrupts

Figure 11.1 shows types of Interrupts.

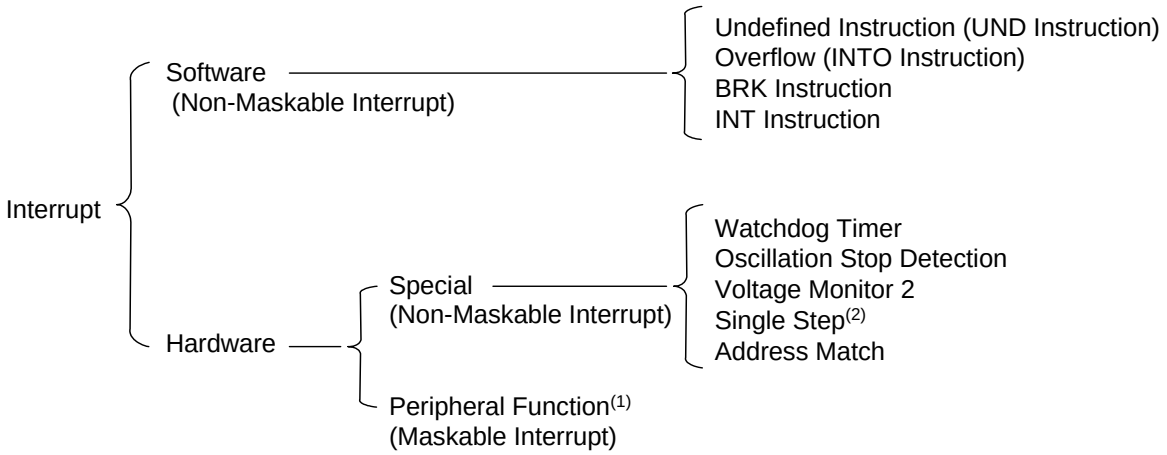

NOTES :
1. Peripheral function interrupts in the microcomputer are used to generate the peripheral interrupt.
2. Do not use this interrupt. For development tools only.

Figure 11.1 Interrupts

- Maskable Interrupt: The interrupt enable flag (I flag) enables or disables an interrupt. The interrupt priority order based on the interrupt priority level can be changed.
- Non-Maskable Interrupt: The interrupt enable flag (I flag) does not enable or disable an interrupt. The interrupt priority order based on interrupt priority level cannot be changed.

11.1.2 Software Interrupts

A software interrupt is generated when an instruction is executed. The software interrupts are non-maskable interrupts.

11.1.2.1 Undefined Instruction Interrupt

The undefined instruction interrupt is generated when the UND instruction is executed.

11.1.2.2 Overflow Interrupt

The overflow interrupt is generated when the O flag is set to “1” (arithmetic operation overflow) and the INTO instruction is executed. Instructions to set the O flag are:
ABS, ADC, ADCF, ADD, CMP, DIV, DIVU, DIVX, NEG, RMPA, SBB, SHA, SUB

11.1.2.3 BRK Interrupt

A BRK interrupt is generated when the BRK instruction is executed.

11.1.2.4 INT Instruction Interrupt

An INT instruction interrupt is generated when the INT instruction is executed. The INT instruction can select software interrupt numbers 0 to 63. Software interrupt numbers 4 to 31 are assigned to the peripheral function interrupt. Therefore, the microcomputer executes the same interrupt routine when the INT instruction is executed as when a peripheral function interrupt is generated. In software interrupt numbers 0 to 31, the U flag is saved to the stack during instruction execution and set the U flag to “0” (ISP selected) before executing an interrupt sequence. The U flag is restored from the stack when returning from the interrupt routine. In software interrupt numbers 32 to 63, the U flag does not change state during instruction execution, and the selected SP is used.

11.1.3 Special Interrupts

Special interrupts are non-maskable interrupts.

11.1.3.1 Watchdog Timer Interrupt

The watchdog timer interrupt is generated by the watchdog timer. Reset the watchdog timer after the watchdog timer interrupt is generated. For details, refer to **12. Watchdog Timer**.

11.1.3.2 Oscillation Stop Detection Interrupt

Oscillation Stop Detection Interrupt is generated by the oscillation stop detection function. For details of the oscillation stop detection function, refer to **9.** Clock Generation Circuit.

11.1.3.3 Voltage Monitor 2 Interrupt

The voltage monitor 2 interrupt is generated by the voltage detection circuit. For details of the voltage detection circuit, refer to **6. Voltage Detection Circuit**.

11.1.3.4 Single-Step Interrupt, Address Break Interrupt

Do not use the single-step interrupt. For development tools only.

11.1.3.5 Address Match Interrupt

The address match interrupt is generated immediately before executing an instruction that is stored into an address indicated by the RMAD0 to RMAD1 registers when the AIER0 or AIER1 bit in the AIER register which is set to “1” (address match interrupt enable). For details of the address match interrupt, refer to **11.4 Address Match Interrupt**.

11.1.4 Peripheral Function Interrupt

The peripheral function interrupt is generated by the internal peripheral function of the microcomputer and a maskable interrupt. Refer to **Table 11.2 Relocatable Vector Tables** for the interrupt factor of the peripheral function interrupt. For details of the peripheral function, refer to the description of each peripheral function.

11.1.5 Interrupts and Interrupt Vector

There are 4 bytes in one vector. Set the starting address of interrupt routine in each vector table. When an interrupt request is acknowledged, the CPU branches to the address set in the corresponding interrupt vector. Figure 11.2 shows the Interrupt Vector.

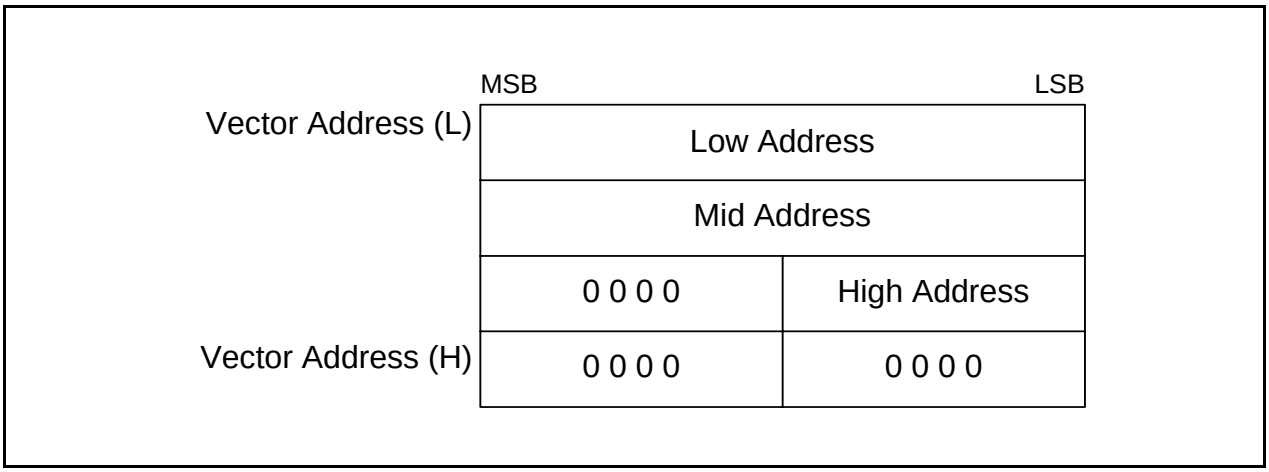

Figure 11.2 Interrupt Vector

11.1.5.1 Fixed Vector Tables

The fixed vector tables are allocated addresses 0FFDCh to 0FFFFh. Table 11.1 lists the Fixed Vector Tables. The vector addresses (H) of fixed vectors are used by the ID code check function. For details, refer to **18.3 Functions To Prevent Flash Memory from Rewriting**.

Table 11.1 Fixed Vector Tables

Interrupt Source	Vector Addresses Address (L) to (H)	Remarks	Reference
Undefined Instruction	0FFDCh to 0FFDFh	Interrupt on UND instruction	R8C/Tiny series software manual
Overflow	0FFE0h to 0FFE3h	Interrupt on INTO instruction	
BRK Instruction	0FFE4h to 0FFE7h	If the content of address 0FFE7h is FFh, program execution starts from the address shown by the vector in the relocatable vector table.	
Address Match	0FFE8h to 0FFEBh		11.4 Address Match Interrupt
Single Step(1)	0FFECh to 0FFEFh		
• Watchdog Timer • Oscillation Stop Detection • Voltage Monitor 2	0FFF0h to 0FFF3h		• 12. Watchdog Timer • 9. Clock Generation Circuit • 6. Voltage Detection Circuit
Address Break(1)	0FFF4h to 0FFF7h		
(Reserved)	0FFF8h to 0FFFBh		
Reset	0FFFCh to 0FFFFh		5. Reset

1. Do not use the single-step interrupt. For development tools only.

11.1.5.2 Relocatable Vector Tables

The relocatable vector tables occupy 256 bytes from the starting address set in the INTB register. Table 11.2 lists the Relocatable Vector Tables.

Table 11.2 Relocatable Vector Tables

Interrupt Factor	Vector Address(1) Address (L) to Address (H)	Software Interrupt Number	Reference
BRK Instruction(2)	+0 to +3(0000h to 0003h)	0	R8C/Tiny Series software manual
–(Reserved)		1 to 12	
Key Input	+52 to +55(0034h to 0037h)	13	11.3 Key Input Interrupt
A/D Converter	+56 to +59(0038h to 003Bh)	14	16. A/D Converter
SSU	+60 to +63(003Ch to 003Fh)	15	15. Clock Synchronous Serial I/O with Chip Select (SSU)
Compare 1	+64 to +67(0040h to 0043h)	16	13.3 Timer C
UART0 Transmit	+68 to +71(0044h to 0047h)	17	14. Serial Interface
UART0 Receive	+72 to +75(0048h to 004Bh)	18	
–(Reserved)		19	
–(Reserved)		20	
–(Reserved)		21	
Timer X	+88 to +91(0058h to 005Bh)	22	13.1 Timer X
–(Reserved)		23	
Timer Z	+96 to +99(0060h to 0063h)	24	13.2 Timer Z
$\overline{\text{INT1}}$	+100 to +103(0064h to 0067h)	25	11.2 $\overline{\text{INT}}$ interrupt
$\overline{\text{INT3}}$	+104 to +107(0068h to 006Bh)	26	
Timer C	+108 to +111(006Ch to 006Fh)	27	13.3 Timer C
Compare 0	+112 to +115(0070h to 0073h)	28	
$\overline{\text{INT0}}$	+116 to +119(0074h to 0077h)	29	11.2 $\overline{\text{INT}}$ interrupt
–(Reserved)		30	
–(Reserved)		31	
Software Interrupt(2)	+128 to +131(0080h to 0083h) to +252 to +255(00FCh to 00FFh)	32 to 63	R8C/Tiny Series software manual

NOTES:
1. These addresses are relative to those in the INTB register.
2. The I flag does not disable these interrupts.

11.1.6 Interrupt Control

The following describes enable/disable the maskable interrupts and set the priority order to acknowledge. The contents explained does not apply to the nonmaskable interrupts.
Use the I flag in the FLG register, IPL and the ILVL2 to ILVL0 bits in each interrupt control register to enable/disable the maskable interrupts. Whether an interrupt is requested is indicated by the IR bit in each interrupt control register.
Figure 11.3 shows the Interrupt Control Register and Figure 11.4 shows the INT0IC Register

Interrupt Control Register(2)

Symbol	Address	After Reset
KUPIC	004Dh	XXXXX000b
ADIC	004Eh	XXXXX000b
SSUAIC	004Fh	XXXXX000b
CMP1IC	0050h	XXXXX000b
S0TIC	0051h	XXXXX000b
S0RIC	0052h	XXXXX000b
TXIC	0056h	XXXXX000b
TZIC	0058h	XXXXX000b
INT1IC	0059h	XXXXX000b
INT3IC	005Ah	XXXXX000b
TCIC	005Bh	XXXXX000b
CMP0IC	005Ch	XXXXX000b

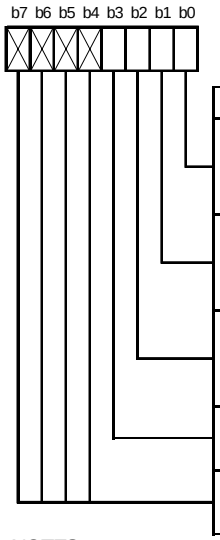

Bit Symbol	Bit Name	Function	RW
ILVL0	Interrupt Priority Level Select Bit	b2 b1 b0 0 0 0 : Level 0 (interrupt disable) 0 0 1 : Level 1 0 1 0 : Level 2 0 1 1 : Level 3 1 0 0 : Level 4 1 0 1 : Level 5 1 1 0 : Level 6 1 1 1 : Level 7	RW
ILVL1			RW
ILVL2			RW
IR	Interrupt Request Bit	0 : Requests no interrupt 1 : Requests interrupt	RW(1)
— (b7-b4)	Nothing is assigned. When write, set to “0”. When read, its content is indeterminate.		—

NOTES :
1. Only “0” can be written to the IR bit. Do not write “ 1”.
2. To rewrite the interrupt control register, rewrite it when the interrupt request which is applicable for its register is not generated. Refer to **20.2.6 Changing Interrupt Control Registers.**

Figure 11.3 Interrupt Control Register

INT0 Interrupt Control Register(2)

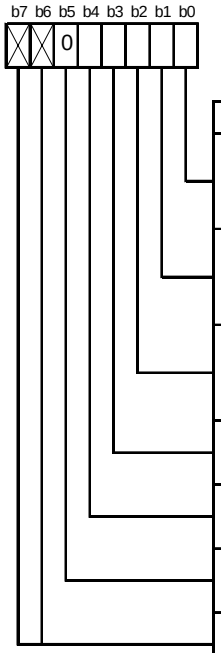

Symbol	Address	After Reset
INT01C	005Dh	XX00X000b

Bit Symbol	Bit Name	Function	RW
ILVL0	Interrupt Priority Level Select Bit	b2 b1 b0 0 0 0 : Level 0 (interrupt disable) 0 0 1 : Level 1 0 1 0 : Level 2 0 1 1 : Level 3 1 0 0 : Level 4 1 0 1 : Level 5 1 1 0 : Level 6 1 1 1 : Level 7	RW
ILVL1			RW
ILVL2			RW
IR	Interrupt Request Bit	0 : Requests no interrupt 1 : Requests interrupt	RW(1)
POL	Polarity Switch Bit(4)	0 : Selects falling edge 1 : Selects rising edge(3)	RW
— (b5)	Reserved Bit	Set to “0”	RW
— (b7-b6)	Nothing is assigned. When write, set to “0”. When read, its content is indeterminate.		—

NOTES :

1. Only “0” can be written to the IR bit. (Do not write “1”.)
2. To rewrite the interrupt control register, rewrite it when the interrupt request which is applicable for its register is not generated. Refer to **20.2.6 Changing Interrupt Control Registers.**
3. If the INTOPL bit in the INTEN register is set to “1” (both edges), set the POL bit to “0” (selects falling edge).
4. The IR bit may be set to “1” (requests interrupt) when the POL bit is rewritten. Refer to **20.2.5 Changing Interrupt Factor.**

Figure 11.4 INT0IC Register

11.1.6.1 I Flag

The I flag enables or disables the maskable interrupt. Setting the I flag to “1” (enabled) enables the maskable interrupt. Setting the I flag to “0” (disabled) disables all maskable interrupts.

11.1.6.2 IR Bit

The IR bit is set to “1” (interrupt requested) when an interrupt request is generated. Then, when the interrupt request is acknowledged and the CPU branches to the corresponding interrupt vector, the IR bit is set to “0” (= interrupt not requested).
The IR bit can be set to “0” by a program. Do not write “1” to this bit.

11.1.6.3 ILVL2 to ILVL0 Bits and IPL

Interrupt priority levels can be set using the ILVL2 to ILVL0 bits.
Table 11.3 lists the Settings of Interrupt Priority Levels and Table 11.4 lists the Interrupt Priority Levels Enabled by IPL.

The following are conditions under which an interrupt is acknowledged:

- I flag = 1
- IR bit = 1
- interrupt priority level > IPL

The I flag, IR bit, ILVL2 to ILVL0 bits and IPL are independent of each other. They do not affect one another.

Table 11.3 Settings of Interrupt Priority Levels

ILVL2 to ILVL0 Bits	Interrupt Priority Level	Priority Order
000b	Level 0 (interrupt disabled)	–
001b	Level 1	Low
010b	Level 2	↓
011b	Level 3	
100b	Level 4	
101b	Level 5	
110b	Level 6	
111b	Level 7	High

Table 11.4 Interrupt Priority Levels Enabled by IPL

IPL	Enabled Interrupt Priority Levels
000b	Interrupt level 1 and above
001b	Interrupt level 2 and above
010b	Interrupt level 3 and above
011b	Interrupt level 4 and above
100b	Interrupt level 5 and above
101b	Interrupt level 6 and above
110b	Interrupt level 7 and above
111b	All maskable interrupts are disabled

11.1.6.4 Interrupt Sequence

An interrupt sequence is performed between an interrupt request acknowledgement and interrupt routine execution.

When an interrupt request is generated while an instruction is executed, the CPU determines its interrupt priority level after the instruction is completed. The CPU starts the interrupt sequence from the following cycle. However, in regards to the SMOVB, SMOVF, SSTR or RMPA instruction, if an interrupt request is generated while executing the instruction, the microcomputer suspends the instruction to start the interrupt sequence. The interrupt sequence is performed as follows. Figure 11.5 shows the Time Required for Executing Interrupt Sequence.

(1) The CPU gets interrupt information (interrupt number and interrupt request level) by reading the address 00000h. The IR bit for the corresponding interrupt is set to “0” (interrupt not requested).
(2) The FLG register immediately before entering the interrupt sequence is saved to the CPU internal temporary register(1).
(3) The I, D and U flags in the FLG register are set as follows:
The I flag is set to “0” (disables interrupts).
The D flag is set to “0” (disables single-step interrupt).
The U flag is set to “0” (ISP selected).
However, the U flag does not change state if an INT instruction for software interrupt numbers 32 to 63 is executed.
(4) The CPU’s internal temporary register(1) is saved to the stack.
(5) The PC is saved to the stack.
(6) The interrupt priority level of the acknowledged interrupt is set in the IPL.
(7) The starting address of the interrupt routine set in the interrupt vector is stored in the PC.

After the interrupt sequence is completed, the instructions are executed from the starting address of the interrupt routine.

NOTES:
1. **This register cannot be used by user.**

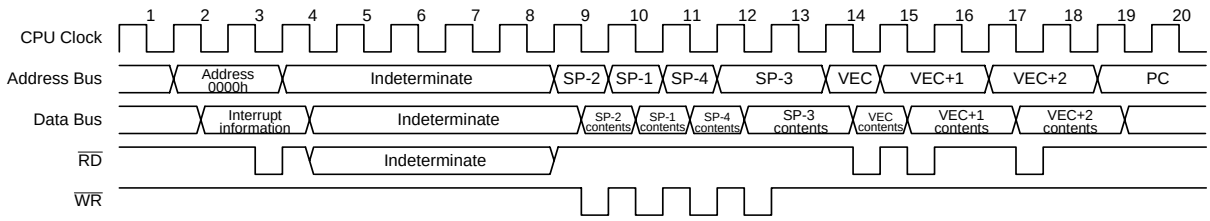

The indeterminate state depends on the instruction queue buffer. A read cycle occurs when the instruction queue buffer is ready to acknowledge instructions.

Figure 11.5 Time Required for Executing Interrupt Sequence

11.1.6.5 Interrupt Response Time

Figure 11.6 shows an Interrupt Response Time. The interrupt response time is the period between an interrupt request generation and the execution of the first instruction in an interrupt routine. An interrupt response time includes the period between an interrupt request generation and the completed execution of an instruction (see #a in Figure 11.6) and the period required to perform an interrupt sequence (20 cycles, see #b in Figure 11.6).

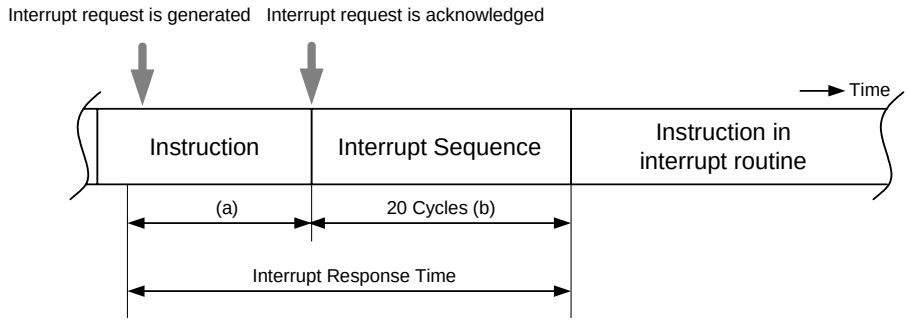

(a) Period between an interrupt request generation and the completed execution of an instruction. The length of this time varies depending on the instruction being executed. The DIVX instruction requires the longest time; 30 cycles (no wait and when the register is set as the divisor)
(b) 21 cycles for address match and single-step interrupts.

Figure 11.6 Interrupt Response Time

11.1.6.6 IPL Change when Interrupt Request is Acknowledged

When an interrupt request of a maskable interrupt is acknowledged, the interrupt priority level of the acknowledged interrupt is set in the IPL.
When a software interrupt and special interrupt request are acknowledged, the level listed in Table 11.5 is set to the IPL. Table 11.5 lists the IPL Value When Software or Special Interrupts Is Acknowledged.

Table 11.5 IPL Value When Software or Special Interrupts Is Acknowledged

Interrupt Factor	Value Set to IPL
Watchdog Timer, Oscillation Stop Detection, Voltage Monitor 2	7
Software, Address Match, Single-Step	Not changed

11.1.6.7 Saving a Register

In the interrupt sequence, the FLG register and PC are saved to the stack.
After 4 high-order bits in the PC and 4 high-order (IPL) and 8 low-order bits in the FLG register, extended to 16 bits, are saved to the stack, the 16 low-order bits in the PC are saved. Figure 11.7 shows the Stack State Before and After Acknowledgement of Interrupt Request.
The other necessary registers are saved by a program at the beginning of the interrupt routine. The PUSHM instruction can save several registers in the register bank being currently used(1) with 1 instruction.

NOTES:

1. **Selectable from the R0, R1, R2, R3, A0, A1, SB and FB registers.**

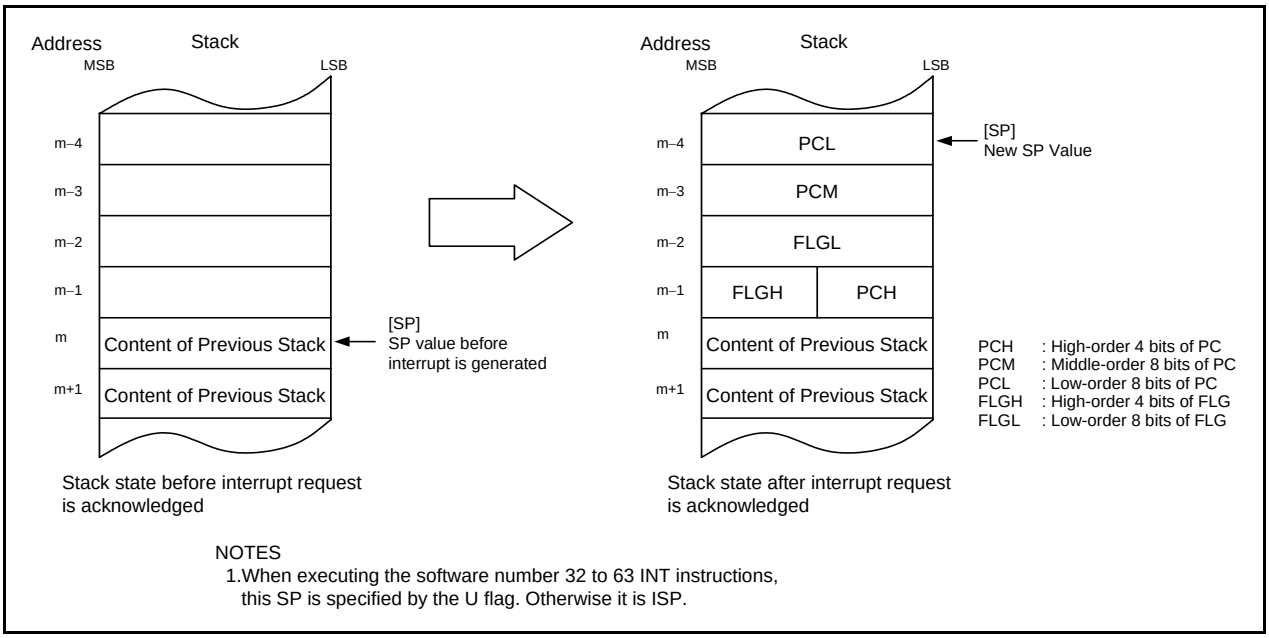

Figure 11.7 Stack State Before and After Acknowledgement of Interrupt Request

The register saving operation which is performed in the interrupt sequence is saved in 8 bits every 4 steps. Figure 11.8 shows the Operation of Saving Register.

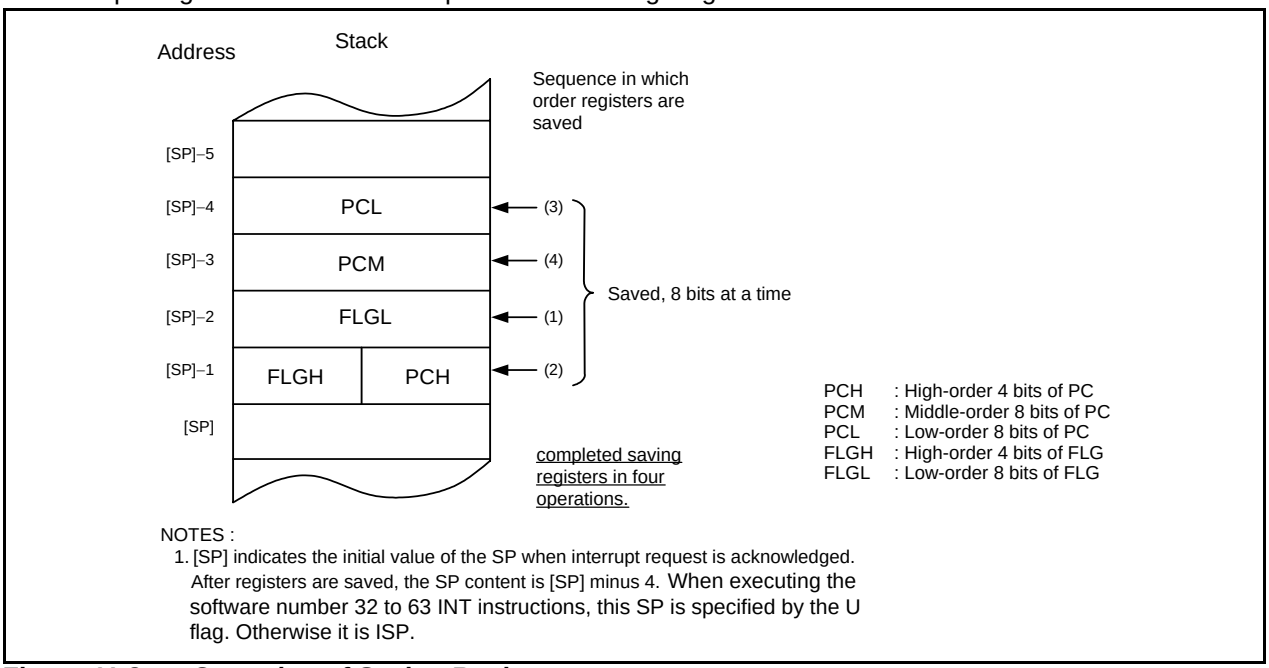

Figure 11.8 Operation of Saving Register

11.1.6.8 Returning from an Interrupt Routine

When the REIT instruction is executed at the end of an interrupt routine, the FLG register and PC, which have been saved to the stack, are automatically returned. The program, executed before the interrupt request has been acknowledged, starts running again.
Return the register saved by a program in an interrupt routine using the POPM instruction or others before the REIT instruction.

11.1.6.9 Interrupt Priority

If two or more interrupt requests are generated while executing one instruction, the interrupt with the higher priority is acknowledged.
Set the ILVL2 to ILVL0 bits to select the desired priority level for maskable interrupts (peripheral functions). However, if two or more maskable interrupts have the same priority level, their interrupt priority is resolved by hardware, with the higher priority interrupt acknowledged in hardware.
The priority levels of special interrupts such as reset (reset has the highest priority) and watchdog timer are set by hardware. Figure 11.9 shows the Interrupt Priority Levels of Hardware Interrupt.
The interrupt priority does not affect software interrupts. The microcomputer jumps to the interrupt routine when the instruction is executed.

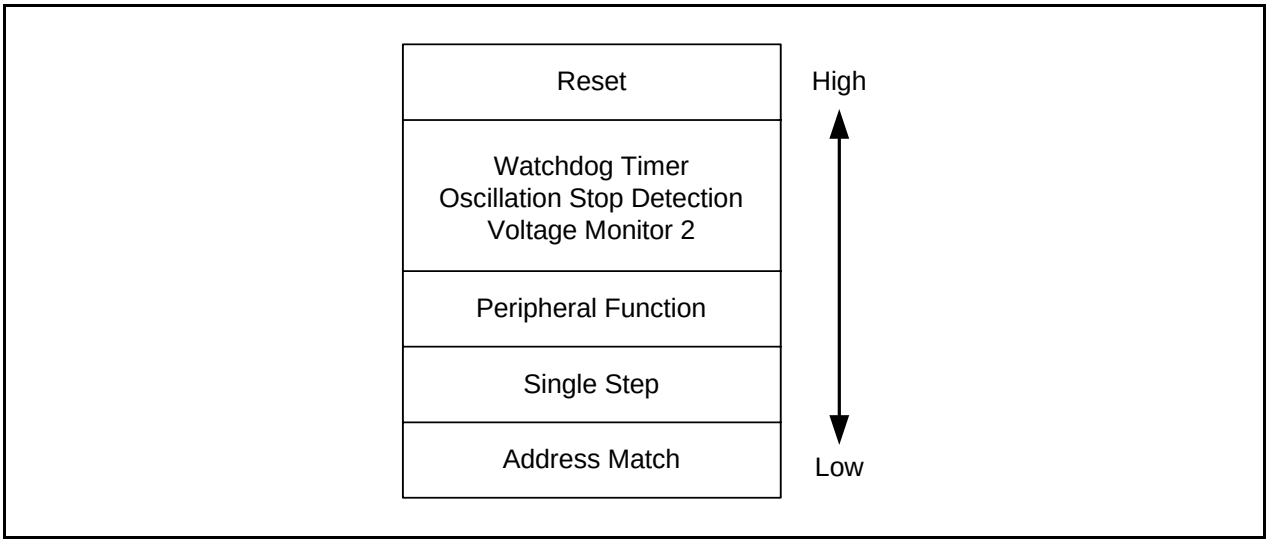

Figure 11.9 Interrupt Priority Levels of Hardware Interrupt

11.1.6.10 Interrupt Priority Judgement Circuit

The interrupt priority judgement circuit selects the highest priority interrupt. Figure 11.10 shows the Judgement Circuit of Interrupts Priority Level.

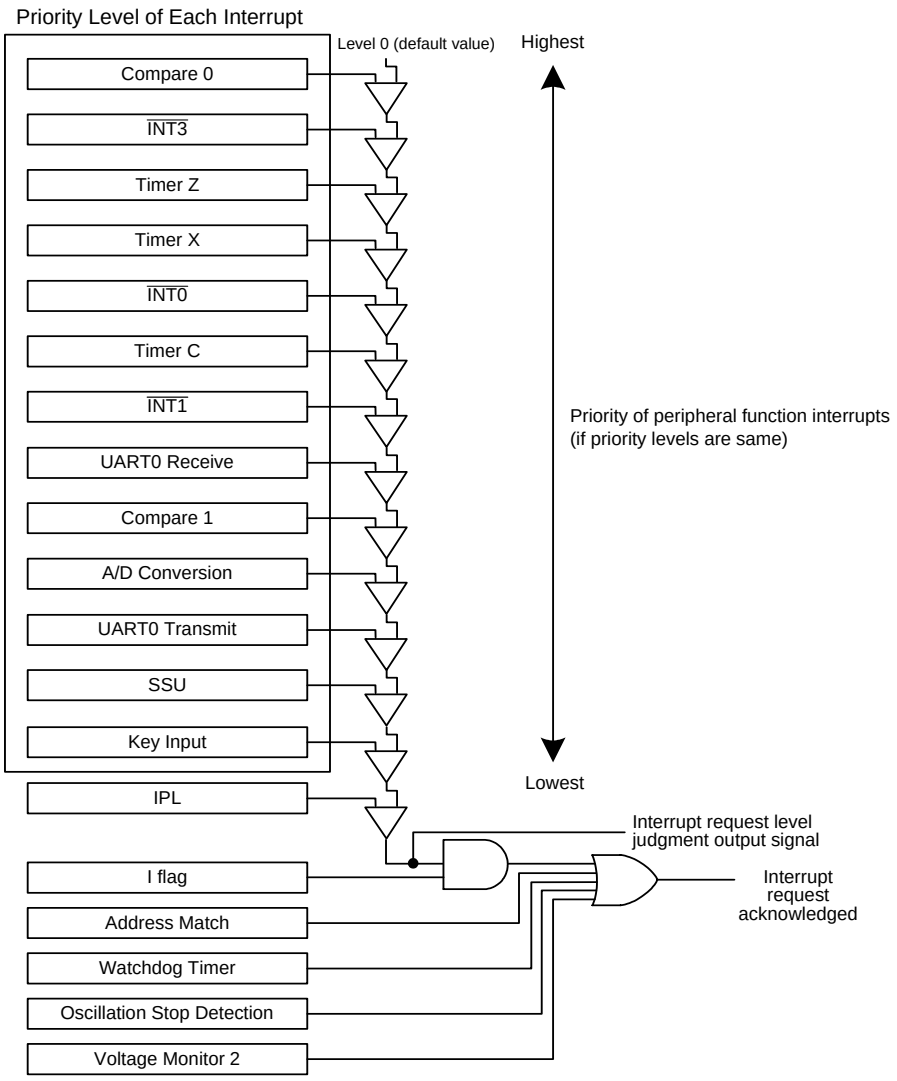

Figure 11.10 Judgement Circuit of Interrupts Priority Level

11.2 $\overline{\text{INT}}$ Interrupt

11.2.1 $\overline{\text{INT0}}$ Interrupt

The $\overline{\text{INT0}}$ interrupt is generated by an $\overline{\text{INT0}}$ input. When using the $\overline{\text{INT0}}$ interrupt, the INT0EN bit in the INTEN register is set to “1” (enable). The edge polarity is selected using the INT0PL bit in the INTEN register and the POL bit in the INT0IC register.
Inputs can be passed through a digital filter with three different sampling clocks.
The $\overline{\text{INT0}}$ pin is shared with the external trigger input pin of timer Z.
Figure 11.11 shows the INTEN and INT0F Registers.

External Input Enable Register

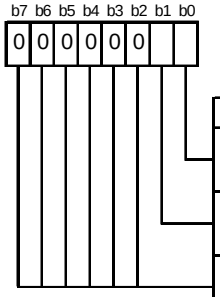

Symbol	Address	After Reset
INTEN	0096h	00h

Bit Symbol	Bit Name	Function	RW
INT0EN	$\overline{\text{INT0}}$ Input Enable Bit(1)	0 : Disable 1 : Enable	RW
INT0PL	$\overline{\text{INT0}}$ Input Polarity Select Bit(2,3)	0 : One edge 1 : Both edges	RW
— (b7-b2)	Reserved Bit	Set to “0”	RW

NOTES :
1. Set the INT0EN bit while the INOSTG bit in the PUM register is set to “0” (one-shot trigger disabled).
2. When setting the INT0PL bit to “1” (both edges), set the POL bit in the INT0IC register to “0” (selects falling edge).
3. The IR bit in the INT0IC register may be set to “1” (requests interrupt) when the INT0PL bit is rewritten. Refer to **20.2.5 Changing Interrupt Factor.**

$\overline{\text{INT0}}$ Input Filter Select Register

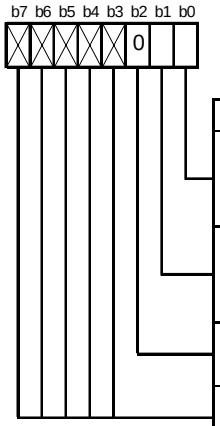

Symbol	Address	After Reset
INT0F	001Eh	00h

Bit Symbol	Bit Name	Function	RW
INT0F0	$\overline{\text{INT0}}$ Input Filter Select Bit	b1 b0 0 0 : No filter 0 1 : Filter with f1 sampling 1 0 : Filter with f8 sampling 1 1 : Filter with f32 sampling	RW
INT0F1			RW
— (b2)	Reserved Bit	Set to “0”	RW
— (b7-b3)	Nothing is assigned. When write, set to “0”. When read, its content is indeterminate.		—

Figure 11.11 INTEN and INT0F Registers

11.2.2 $\overline{\text{INT0}}$ Input Filter

The $\overline{\text{INT0}}$ input contains a digital filter. The sampling clock is selected by the INT0F1 to INT0F0 bits in the INT0F register. The IR bit in the INT0IC register is set to “1” (interrupt requested) when the $\overline{\text{INT0}}$ level is sampled for every sampling clock and the sampled input level matches three times.

Figure 11.12 shows the Configuration of INT0 Input Filter. Figure 11.13 shows the Operating Example of INT0 Input Filter.

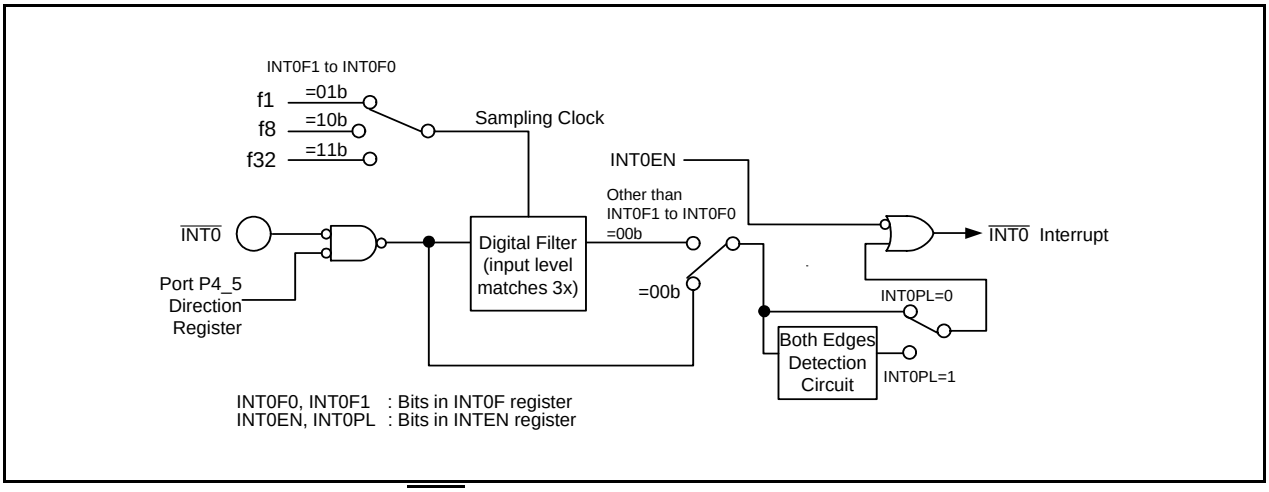

Figure 11.12 Configuration of $\overline{\text{INT0}}$ Input Filter

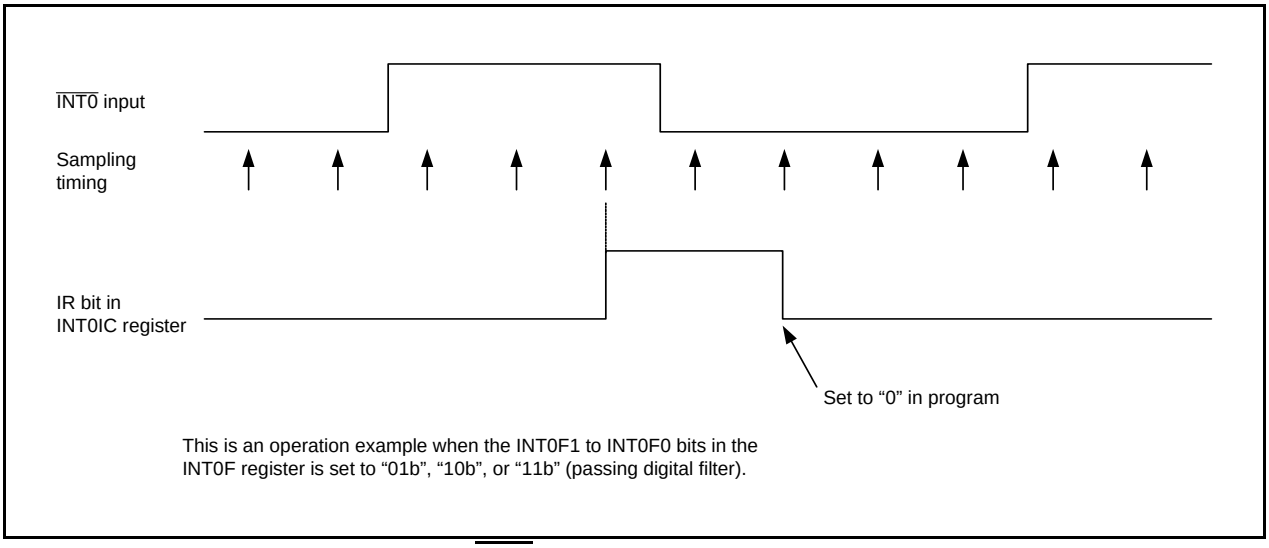

Figure 11.13 Operating Example of $\overline{\text{INT0}}$ Input Filter

11.2.3 $\overline{\text{INT1}}$ Interrupt

The $\overline{\text{INT1}}$ interrupt is generated by $\overline{\text{INT1}}$ inputs. The edge polarity is selected by the R0EDG bit in the TXMR register.
When the CNTRSEL bit in the UCON register is set to “0”, the $\overline{\text{INT10}}$ pin becomes the $\overline{\text{INT1}}$ input pin.
When the CNTRSEL bit is set to “1”, the $\overline{\text{INT11}}$ pin becomes the $\overline{\text{INT1}}$ input pin.
The $\overline{\text{INT10}}$ pin is shared with the CNTR00 pin and the $\overline{\text{INT11}}$ pin is shared with the CNTR01 pin.
Figure 11.14 shows the TXMR Register when $\overline{\text{INT1}}$ Interrupt is Used.

Timer X Mode Register

b7 b6 b5 b4 b3 b2 b1 b0

Symbol	Address	After Reset
TXMR	008Bh	00h

Bit Symbol	Bit Name	Function	RW
TXMOD0	Operating Mode Select Bit 0, 1(1)	b1 b0 0 0 : Timer mode or pulse period measurement mode 0 1 : Do not set 1 0 : Event count mode 1 1 : Pulse width measurement mode	RW
TXMOD1			RW
R0EDG	$\overline{\text{INT1}}$/CNTR0 Polarity Switch Bit(2)	0 : Rising edge 1 : Falling edge	RW
TXS	Timer X Count Start Flag(3)	0 : Stops counting 1 : Starts counting	RW
TXOCNT	P3_7/$\overline{\text{CNTR0}}$ Select Bit	Function varies depending on operating mode	RW
TXMOD2	Operating Mode Select Bit 2	0 : Other than pulse period measurement mode 1 : Pulse period measurement mode	RW
TXEDG	Active Edge Reception Flag	Function varies depending on operating mode	RW
TXUND	Timer X Underflow Flag	Function varies depending on operating mode	RW

NOTES :
1. When using $\overline{\text{INT1}}$ interrupt, select modes other than pulse output mode.
2. The IR bit in the INT1IC register may be set to “1” (requests interrupt) when the R0EDG bit is rewritten. Refer to **20.2.5 Changing Interrupt Factor.**
3. Refer to **20.4.2 Timer X** for precautions on the TXS bit.

Figure 11.14 TXMR Register when $\overline{\text{INT1}}$ Interrupt is Used

11.2.4 $\overline{\text{INT3}}$ Interrupt

The $\overline{\text{INT3}}$ interrupt is generated by the $\overline{\text{INT3}}$ input. Set the TCC07 bit in the TCC0 register to "0" ($\overline{\text{INT3}}$).

When the TCC06 bit in the TCC0 register is set to "0", the $\overline{\text{INT3}}$ interrupt request is generated synchronizing with the count source of timer C. When the TCC06 bit is set to "1", the $\overline{\text{INT3}}$ interrupt request is generated when the $\overline{\text{INT3}}$ is input.

The $\overline{\text{INT3}}$ input contains a digital filter. The IR bit in the INT3IC register is set to "1" (interrupt requested) when the $\overline{\text{INT3}}$ level is sampled for every sampling clock and the sampled input level matches three times. The sampling clock is selected by the TCC11 to TCC10 bits in the TCC1 register. When selecting "Filter", the interrupt request is generated synchronizing with the sampling clock even if the TCC06 bit is set to "1". The P3_3 bit in the P3 register indicates the previous value before filtering regardless of the contents set in the TCC11 to TCC10 bits.

The $\overline{\text{INT3}}$ pin is used with the TCIN pin.

When setting the TCC07 bit to "1" (fRING128), the $\overline{\text{INT3}}$ interrupt is generated by the fRING128 clock. The IR bit in the INT3IC register is set to "1" (interrupt requested) every fRING128 clock cycle or every half fRING128 clock cycle.

Figure 11.15 shows the TCC0 Register and Figure 11.16 shows the TCC1 Register.

Timer C Control Register 0

b7 b6 b5 b4 b3 b2 b1 b0: 0

Symbol	Address	After Reset
TCC0	009Ah	00h

Bit Symbol	Bit Name	Function	RW
TCC00	Timer C Count Start Bit	0 : Stops counting 1 : Starts counting	RW
TCC01	Timer C Count Source Select Bit(1)	b2 b1 0 0 : f1 0 1 : f8 1 0 : f32 1 1 : fRING-fast	RW
TCC02			RW
TCC03	$\overline{\text{INT3}}$ Interrupt and Capture Polarity Select Bit(1,2)	b4 b3 0 0 : Rising edge 0 1 : Falling edge 1 0 : Both edges 1 1 : Do not set	RW
TCC04			RW
— (b5)	Reserved Bit	Set to "0"	RW
TCC06	$\overline{\text{INT3}}$ Interrupt Request Generation Timing Select Bit(2,3)	0 : $\overline{\text{INT3}}$ Interrupt is generated synchronizing with Timer C count 1 : $\overline{\text{INT3}}$ Interrupt is generated when $\overline{\text{INT3}}$ interrupt is input(4)	RW
TCC07	$\overline{\text{INT3}}$ Interrupt and Capture Input Switch Bit(1,2)	0 : $\overline{\text{INT3}}$ 1 : fRING128	RW

NOTES :

1. Change this bit when the TCC00 bit is set to "0" (count stop).
2. The IR bit in the INT3IC register may be set to "1" (requests interrupt) when the TCC03, TCC04, TCC06 and TCC07 bits are rewritten. Refer to **20.2.5 Changing Interrupt Factor.**
3. When the TCC13 bit is set to "1" (output compare mode) and $\overline{\text{INT3}}$ interrupt is input, regardless of the setting value of the TCC06 bit, an interrupt request is generated.
4. When using $\overline{\text{INT3}}$ filter, the $\overline{\text{INT3}}$ interrupt is generated synchronizing with the clock for the digital filter.

Figure 11.15 TCC0 Register

Timer C Control Register 1

b7 b6 b5 b4 b3 b2 b1 b0

Symbol	Address	After Reset
TCC1	009Bh	00h

Bit Symbol	Bit Name	Function	RW
TCC10	$\overline{\text{INT3}}$ Filter Select Bit(1)	b1b0 0 0 : No filter 0 1 : Filter with f1 sampling 1 0 : Filter with f8 sampling 1 1 : Filter with f32 sampling	RW
TCC11			RW
TCC12	Timer C Counter Reload Select Bit(2,3)	0 : No reload 1 : Set TC register to “0000h” when compare 1 is matched	RW
TCC13	Compare 0 / Capture Select Bit	0 : Capture Select (input capture mode) (2) 1 : Compare 0 Output Select (output compare mode)	RW
TCC14	Compare 0 Output Mode Select Bit(3)	b5 b4 0 0 : CMP output remains unchanged even when compare 0 is matched 0 1 : CMP output is reversed when compare 0 signal is matched 1 0 : CMP output is set to “L” when compare 0 signal is matched 1 1 : CMP output is set to “H” when compare 0 signal is matched	RW
TCC15			RW
TCC16	Compare 1 Output Mode Select Bit(3)	b7 b6 0 0 : CMP output remains unchanged even when compare 1 is matched 0 1 : CMP output is reversed when compare 1 signal is matched 1 0 : CMP output is set to “L” when compare 1 signal is matched 1 1 : CMP output is set to “H” when compare 1 signal is matched	RW
TCC17			RW

NOTES :

1. When the same value from the $\overline{\text{INT3}}$ pin is sampled three times continuously, the input is determined.
2. When the TCC00 bit in the TCC0 register is set to “0” (count stop), rewrite the TCC13 bit.
3. When the TCC13 bit is set to “0” (input capture mode), set the TCC12, TCC14 to TCC17 bits to “0”.

Figure 11.16 TCC1 Register

11.3 Key Input Interrupt

A key input interrupt request is generated by one of the input edges of the $\overline{K10}$ to $\overline{K13}$ pins. The key input interrupt can be used as a key-on wake-up function to exit wait or stop mode.
The KIiEN (i=0 to 3) bit in the KIEN register can select whether the pins are used as $\overline{KIi}$ input. The KIiPL bit in the KIEN register can select the input polarity.
When inputting "L" to the $\overline{KIi}$ pin which sets the KIiPL bit to "0" (falling edge), the input of the other $\overline{K10}$ to $\overline{K13}$ pins are not detected as interrupts. Also, when inputting "H" to the $\overline{KIi}$ pin which sets the KIiPL bit to "1" (rising edge), the input of the other $\overline{K10}$ to $\overline{K13}$ pins are not detected as interrupts.
Figure 11.17 shows a Block Diagram of Key Input Interrupt.

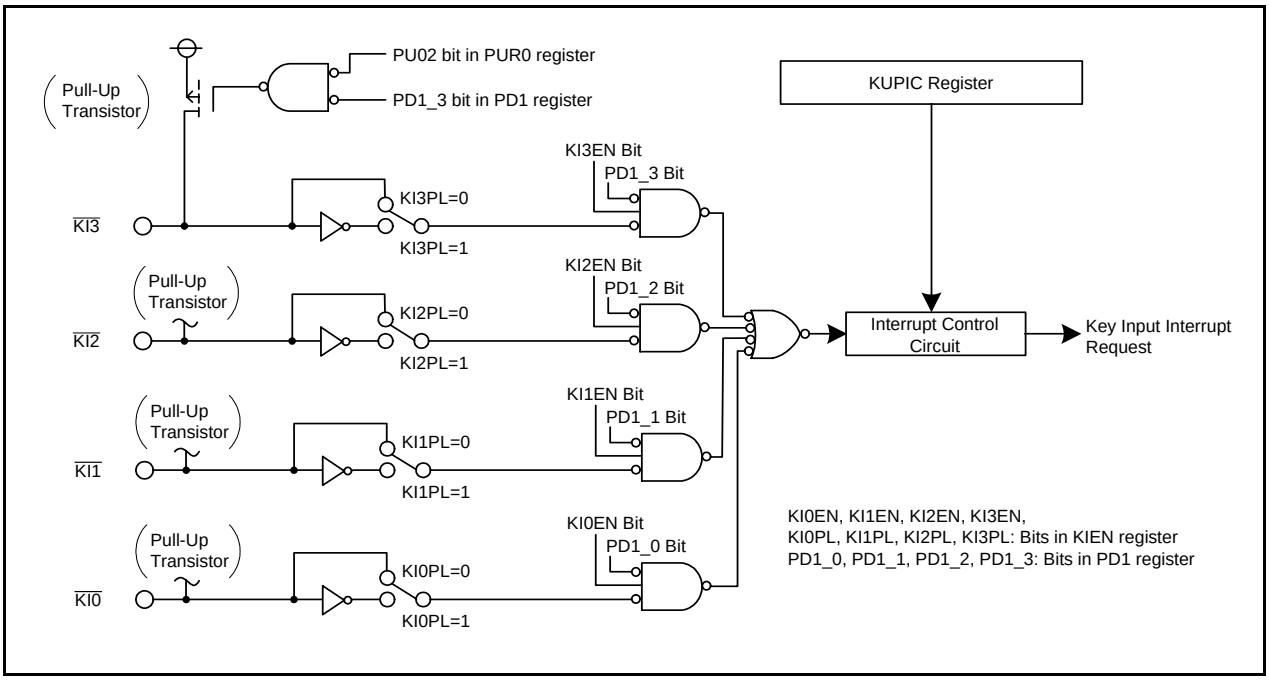

Figure 11.17 Block Diagram of Key Input Interrupt

Key Input Enable Register(1)

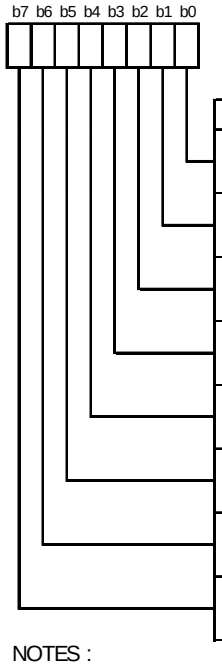

Symbol	Address	After Reset
KIEN	0098h	00h

Bit Symbol	Bit Name	Function	RW
KI0EN	KI0 Input Enable Bit	0 : Disable 1 : Enable	RW
KI0PL	KI0 Input Polarity Select Bit	0 : Falling edge 1 : Rising edge	RW
KI1EN	KI1 Input Enable Bit	0 : Disable 1 : Enable	RW
KI1PL	KI1 Input Polarity Select Bit	0 : Falling edge 1 : Rising edge	RW
KI2EN	KI2 Input Enable Bit	0 : Disable 1 : Enable	RW
KI2PL	KI2 Input Polarity Select Bit	0 : Falling edge 1 : Rising edge	RW
KI3EN	KI3 Input Enable Bit	0 : Disable 1 : Enable	RW
KI3PL	KI3 Input Polarity Select Bit	0 : Falling edge 1 : Rising edge	RW

NOTES :

1. The IR bit in the KUPIC register may be set to “1” (requests interrupt) when the KIEN register is rewritten. Refer to **20.2.5 Changing Interrupt Factor.**

Figure 11.18 KIEN Register

11.4 Address Match Interrupt

An address match interrupt request is generated immediately before executing the instruction at the address indicated by the RMADi register (i=0, 1). This interrupt is used for a break function of the debugger. When using the on-chip debugger, do not set an address match interrupt (the registers of AIER, RMAD0, RMAD1 and the fixed vector tables) in a user system.

Set the starting address of any instruction in the RMADi register. The AIER0 and AIER1 bits in the AIER0 register can select to enable or disable the interrupt. The I flag and IPL do not affect the address match interrupt.
The value of the PC (Refer to **11.1.6.7 Saving a Register** for the value of the PC) which is saved to the stack when an address match interrupt is acknowledged varies depending on the instruction at the address indicated by the RMADi register (The appropriate return address is not pushed on the stack).
When returning from the address match interrupt, return by one of the following:

- Change the content of the stack and use the REIT instruction.
- Use an instruction such as POP to restore the stack as it was before an interrupt request was acknowledged. And then use a jump instruction.

Table 11.6 lists the Value of PC Saved to Stack when Address Match Interrupt is Acknowledged.
Figure 11.19 shows the AIER, RMAD0 to RMAD1 Registers.

Table 11.6 Value of PC Saved to Stack when Address Match Interrupt is Acknowledged

Address Indicated by RMADi Register (i=0,1)	PC Value Saved(1)
• 16-bit operation code instruction • Instruction shown below among 8-bit operation code instructions ADD.B:S #IMM8,dest SUB.B:S #IMM8,dest AND.B:S #IMM8,dest OR.B:S #IMM8,dest MOV.B:S #IMM8,dest STZ.B:S #IMM8,dest STNZ.B:S #IMM8,dest STZX.B:S #IMM81,#IMM82,dest CMP.B:S #IMM8,dest PUSHM src POPM dest JMPS #IMM8 JSRS #IMM8 MOV.B:S #IMM,dest (However, dest = A0 or A1)	Address indicated by RMADi register + 2
• Instructions other than the above	Address indicated by RMADi register + 1

NOTES:
1. Refer to the **11.1.6.7 Saving a Register** for the PC value saved.

Table 11.7 Between Address Match Interrupt Sources and Associated Registers

Address Match Interrupt Factor	Address Match Interrupt Enable Bit	Address Match Interrupt Register
Address Match Interrupt 0	AIER0	RMAD0
Address Match Interrupt 1	AIER1	RMAD1

Address Match Interrupt Enable Register

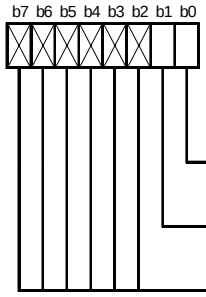

Symbol	Address	After Reset
AIER	0009h	00h

Bit Symbol	Bit Name	Function	RW
AIER0	Address Match Interrupt 0 Enable Bit	0 : Disable 1 : Enable	RW
AIER1	Address Match Interrupt 1 Enable Bit	0 : Disable 1 : Enable	RW
— (b7-b2)	Nothing is assigned. When write, set to “0”. When read, its content is “0”.		—

Address Match Interrupt Register i(i=0,1)

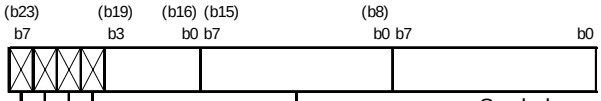

Symbol	Address	After Reset
RMAD0	0012h-0010h	X00000h
RMAD1	0016h-0014h	X00000h

Function		Setting Range	RW
Address setting register for address match interrupt		00000h to FFFFFh	RW
— (b7-b4)	Nothing is assigned. When write, set to “0”. When read, its content is indeterminate.		—

Figure 11.19 AIER, RMAD0 to RMAD1 Registers

12. Watchdog Timer

The watchdog timer is a function to detect when the program is out of control. To use the watchdog timer is recommend for improving reliability of a system. The watchdog timer contains a 15-bit counter and can select count source protection mode is enabled or disabled. Table 12.1 lists the Count Source Protection Mode is Enabled / Disabled

Refer to **5.5** Watchdog Timer Reset for details of the watchdog timer reset.

Figure 12.1 shows the Block Diagram of Watchdog Timer and Figures 12.2 to 12.3 show the OFS, WDC, WDTR, WDTS and CSPR Registers.

Table 12.1 Count Source Protection Mode is Enabled / Disabled

Item	When Count Source Protection Mode is Disabled	When Count Source Protection Mode is Enabled
Count Source	CPU clock	Low-speed on-chip oscillator clock
Count Operation	Decrement	
Reset Condition of Watchdog Timer	• Reset • Write “00h” to the WDTR register before writing “FFh” • Underflow	
Count Start Condition	Either of following can be selected • After reset, count starts automatically • Count starts by writing to WDTS register	
Count Stop Condition	Stop mode, wait mode	None
Operation at the time of Underflow	Watchdog timer interrupt or watchdog timer reset	Watchdog timer reset

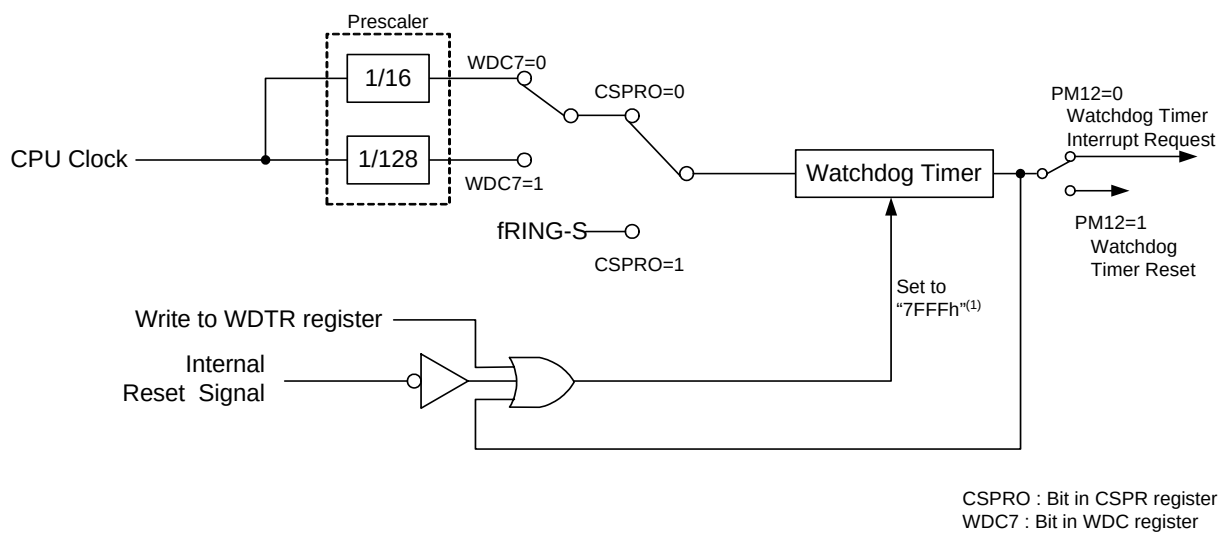

NOTES:
1. When the CSPRO bit is set to “1” (count source protection mode enabled), “0FFFh” is set.

Figure 12.1 Block Diagram of Watchdog Timer

Option Function Select Register[1]

b7	b6	b5	b4	b3	b2	b1	b0
	1	1	1			1	

Symbol	Address	Before Shipment
OFS	0FFFFh	FFh[2]

Bit Symbol	Bit Name	Function	RW
WDTON	Watchdog Timer Start Select Bit	0 : Watchdog timer starts automatically after reset 1 : Watchdog timer is inactive after reset	RW
— (b1)	Reserved Bit	Set to “1”	RW
ROMCR	ROM Code Protect Disabled Bit	0 : ROM code protect disabled 1 : ROMCP1 enabled	RW
ROMCP1	ROM Code Protect Bit	0 : ROM code protect enabled 1 : ROM code protect disabled	RW
— (b6-b4)	Reserved Bit	Set to “1”	RW
CSPROINI	Count Source Protection Mode After Reset Select Bit	0 : Count source protect mode enabled after reset 1 : Count source protect mode disabled after reset	RW

NOTES :

1. The OFS register is on the flash memory. Write to the OFS register with a program.
2. If the block including the OFS register is erased, “FFh” is set to the OFS register.

Watchdog Timer Control Register

b7	b6	b5	b4	b3	b2	b1	b0
	0	0					

Symbol	Address	After Reset
WDC	000Fh	00011111b

Bit Symbol	Bit Name	Function	RW
— (b4-b0)	High-order Bit of Watchdog Timer		RO
— (b5)	Reserved Bit	Set to “0”	RW
— (b6)	Reserved Bit	Set to “0”	RW
WDC7	Prescaler Select Bit	0 : Divide-by-16 1 : Divide-by-128	RW

Figure 12.2 OFS and WDC Registers

Watchdog Timer Reset Register

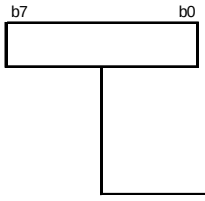

Symbol	Address	After Reset
WDTR	000Dh	Indeterminate

Function	RW
When writing “00h” before writing “FFh”, the watchdog timer is reset.(1) The default value of the watchdog timer is set to “7FFFh” when count source protection mode is disabled and “0FFFh” when count source protection mode is enabled.(2)	WO

NOTES :

1. Do not generate an interrupt between “00h” and the “FFh” writings.
2. When the CSPRO bit in the CSPR register is set to “1” (count source protection mode enabled), “0FFFh” is set to the watchdog timer.

Watchdog Timer Start Register

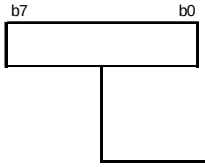

Symbol	Address	After Reset
WDTS	000Eh	Indeterminate

Function	RW
The watchdog timer starts counting after a write instruction to this register.	WO

Count Source Protection Mode Register

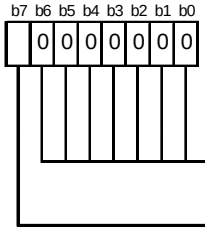

Symbol	Address	After Reset(1)
CSPR	001Ch	00h

Bit Symbol	Bit Name	Function	RW
— (b6-b0)	Reserved Bit	Set to “0”	RW
CSPRO	Count Source Protection Mode Select Bit(2)	0 : Count source protection mode disabled 1 : Count source protection mode enabled	RW

NOTES :

1. When writing “0” to the CSPROINI bit in the OFS register, the value after reset is set to “10000000b”.
2. Write “0” before writing “1” to set the CSPRO bit to “1”. “0” cannot be set by a program.

Figure 12.3 WDTR, WDTS and CSPR Registers

12.1 When Count Source Protection Mode Disabled

The count source of the watchdog timer is the CPU clock when count source protection mode is disabled. Table 12.2 lists the Specification of Watchdog Timer (When Count Source Protection Mode is Disabled).

Table 12.2 Specification of Watchdog Timer (When Count Source Protection Mode is Disabled)

Item	Specification
Count Source	CPU clock
Count Operation	Decrement
Period	$\frac{\text{Division ratio of prescaler(n) x count value of watchdog timer(32768)}}{\text{CPU clock}}$ (1) n : 16 or 128 (selected by WDC7 bit in WDC register) e.g.When the CPU clock is 16MHz and prescaler is divided by 16, the period is approximately 32.8ms
Count Start Condition	The WDTON bit(2) in the OFS register (0FFFFh) selects the operation of watchdog timer after reset • When the WDTON bit is set to “1” (watchdog timer is in stop state after reset) The watchdog timer and prescaler stop after reset and the count starts by writing to the WDTS register • When the WDTON bit is set to “0” (watchdog timer starts automatically after exiting) The watchdog timer and prescaler start counting automatically after reset
Reset Condition of Watchdog Timer	• Reset • Write “00h” to the WDTR register before writing “FFh” • Underflow
Count Stop Condition	Stop and wait modes (inherit the count from the held value after exiting modes)
Operation at the time of Underflow	• When the PM12 bit in the PM1 register is set to “0” Watchdog timer interrupt • When the PM12 bit in the PM1 register is set to “1” Watchdog timer reset (refer to **5.5** Watchdog Timer Reset)

NOTES:

1. The watchdog timer is reset when writing “00h” to the WDTR register before writing “FFh”. The prescaler is reset after the microcomputer is reset. Some errors occur by the prescaler for the period of the watchdog timer.
2. The WDTON bit cannot be changed by a program. When setting the WDTON bit, write “0” to the bit 0 of the address 0FFFFh by a flash writer.

12.2 When Count Source Protection Mode Enabled

The count source of the watchdog timer is the low-speed on-chip oscillator clock when count source protection mode is enabled. If the CPU clock stops when the program is out of control, the clock can be supplied to the watchdog timer. Table 12.3 lists the Specification of Watchdog Timer (When Count Source Protection Mode is Enabled).

Table 12.3 Specification of Watchdog Timer (When Count Source Protection Mode is Enabled)

Item	Specification
Count Source	Low-speed on-chip oscillator clock
Count Operation	Decrement
Period	Count value of watchdog timer (4096) Low-speed on-chip oscillator clock e.g. Period is approximately 32.8ms when the low-speed on-chip oscillator clock is 125 kHz
Count Start Condition	The WDTON bit(1) in the OFS register (0FFFFh) selects the operation of the watchdog timer after reset. • When the WDTON bit is set to “1” (watchdog timer is in stop state after reset) The watchdog timer and prescaler stop after reset and the count starts by writing to the WDTS register • When the WDTON bit is set to “0” (watchdog timer starts automatically after reset) The watchdog timer and prescaler start counting automatically after reset
Reset Condition of Watchdog Timer	• Reset • Write “00h” to the WDTR register before writing “FFh” • Underflow
Count Stop Condition	None (the count does not stop in wait mode after the count starts. The microcomputer does not enter stop mode)
Operation at the time of Underflow	Watchdog timer reset (refer to 5.5 Watchdog Timer Reset)
Register, Bit	• When setting the CSPPRO bit in the CSPR register to “1” (count source protection mode is enabled)(2), the following are set automatically - Set 0FFFFh to the watchdog timer - Set the CM14 bit in the CM1 register to “0” (low-speed on-chip oscillator on) - Set the PM12 bit in the PM1 register to “1” (The watchdog timer is reset when watchdog timer underflows) • The following states are held in count source protection mode - Writing to the CM10 bit in the CM1 register disables (It remains unchanged even if it is set to “1”. The microcomputer does not enter stop mode) - Writing to the CM14 bit in the CM1 register disables (It remains unchanged even if it is set to “1”. The low-speed on-chip oscillator does not stop)

NOTES:

1. The WDTON bit cannot be changed by a program. When setting the WDTON bit, write “0” to the bit 0 of the address 0FFFFh by a flash writer.
2. Even if writing “0” to the CSPROINI bit in the OFS register, the CSPRO bit is set to “1”. The CSPROINI bit cannot be changed by a program. When setting the CSPROINI bit, write “0” to the bit 7 of the address 0FFFFh by a flash writer.

13. Timers

The microcomputer contains two 8-bit timers with 8-bit prescaler and a 16-bit timer. The two 8-bit timers with the 8-bit prescaler contain Timer X and Timer Z. These timers contain a reload register to memorize the default value of the counter. The 16-bit timer is Timer C which contains the input capture and output compare. All these timers operate independently. The count source for each timer is the operating clock that regulates the timing of timer operations such as counting and reloading.
Table 13.1 lists Functional Comparison of Timers.

Table 13.1 Functional Comparison of Timers

Item		Timer X	Timer Z	Timer C
Configuration		8-bit timer with 8-bit prescaler (with reload register)	8-bit timer with 8-bit prescaler (with reload register)	16-bit free-run timer (with input capture and output compare)
Count		Decrement	Decrement	Increment
Count source		• f1 • f2 • f8 • fRING	• f1 • f2 • f8 • Timer X underflow	• f1 • f8 • f32 • fRING-fast
Function	Timer Mode	provided	provided	not provided
	Pulse Output Mode	provided	not provided	not provided
	Event Counter Mode	provided	not provided	not provided
	Pulse Width Measurement Mode	provided	not provided	not provided
	Pulse Period Measurement Mode	provided	not provided	not provided
	Programmable Waveform Generation Mode	not provided	provided	not provided
	Programmable one-shot generation mode	not provided	provided	not provided
	Programmable Wait One-Shot Generation Mode	not provided	provided	not provided
	Input Capture Mode	not provided	not provided	provided
	Output Compare Mode	not provided	not provided	provided
Input Pin		CNTR0	$\overline{\text{INT0}}$	TCIN
Output Pin		CNTR0 $\overline{\text{CNTR0}}$	TZOUT	CMP0_0 to CMP0_2 CMP1_0 to CMP1_2
Related Interrupt		Timer X interrupt $\overline{\text{INT1}}$ interrupt	Timer Y interrupt $\overline{\text{INT0}}$ interrupt	Timer C interrupt $\overline{\text{INT3}}$ interrupt Compare 0 interrupt Compare 1 interrupt
Timer Stop		provided	provided	provided

13.1 Timer X

Timer X is an 8-bit timer with an 8-bit prescaler.
The prescaler and timer consist of the reload register and counter. The reload register and counter are allocated at the same address. When accessing the PREX and TX registers, the reload register and counter can be accessed (Refer to **Tables 13.2 to 13.6 the Specification of Each Modes**).

Figure 13.1 shows the Block Diagram of Timer X. Figures 13.2 and 13.3 show the registers associated with Timer X.
Timer X contains five operating modes listed as follows:

- Timer mode: The timer counts an internal count source.
- Pulse output mode: The timer counts an internal count source and outputs the pulses which inverts the polarity by underflow of the timer.
- Event counter mode: The timer counts external pulses.
- Pulse width measurement mode: The timer measures the pulse width of an external pulse
- Pulse period measurement mode: The timer measures the pulse period of an external pulse.

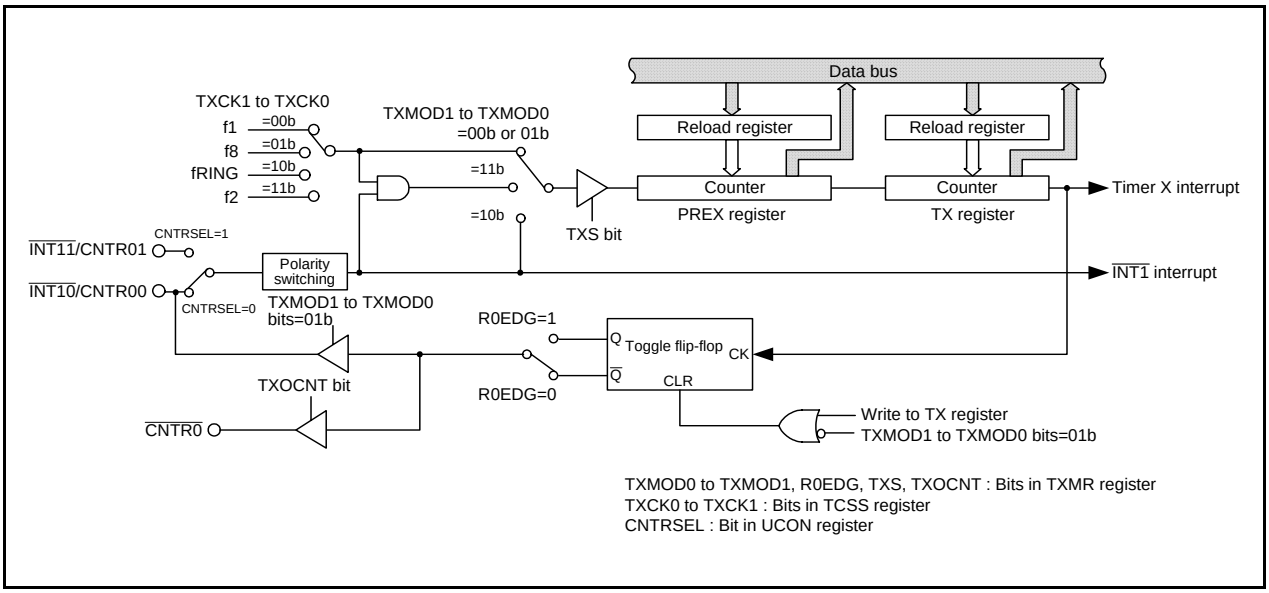

Figure 13.1 Block Diagram of Timer X

Timer X Mode Register

b7 b6 b5 b4 b3 b2 b1 b0

Symbol	Address	After Reset
TXMR	008Bh	00h

Bit Symbol	Bit Name	Function	RW
TXMOD0	Operating Mode Select Bit 0, 1	b1 b0 0 0 : Timer mode or pulse period measurement mode 0 1 : Pulse output mode 1 0 : Event counter mode 1 1 : Pulse width measurement mode	RW
TXMOD1			RW
R0EDG	$\overline{\text{INT1}}$/CNTR0 Signal Polarity Switch Bit(1)	Function varies depending on operating mode	RW
TXS	Timer X Count Start Flag(2)	0 : Stops counting 1 : Starts counting	RW
TXOCNT	P3_7/$\overline{\text{CNTR0}}$ Select Bit	Function varies depending on operating mode	RW
TXMOD2	Operating Mode Select Bit 2	0 : Other than pulse period measurement mode 1 : Pulse period measurement mode	RW
TXEDG	Active Edge Reception Flag	Function varies depending on operating mode	RW
TXUND	Timer X Underflow Flag	Function varies depending on operating mode	RW

NOTES :

1. The IR bit in the INT1IC register may be set to "1" (requests interrupt) when the R0EDG bit is rewritten. Refer to **20.2.5 Changing Interrupt Factor.**
2. Refer to **20.4.2 Timer X** for precautions on the TXS bit.

Figure 13.2 TXMR Register

Prescaler X Register

b7 b0

Symbol	Address	After Reset
PREX	008Ch	FFh

Mode	Function	Setting Range	RW
Timer Mode	Counts internal count source	00h to FFh	RW
Pulse Output Mode	Counts internal count source	00h to FFh	RW
Event Counter Mode	Counts input pulses from external	00h to FFh	RW
Pulse Width Measurement Mode	Measures pulse width of input pulses from external (counts internal count source)	00h to FFh	RW
Pulse Period Measurement Mode	Measures pulse period of input pulses from external (counts internal count source)	00h to FFh	RW

Timer X Register

b7 b0

Symbol	Address	After Reset
TX	008Dh	FFh

Function	Setting Range	RW
Counts underflow of Prescaler X	00h to FFh	RW

Timer Count Source Setting Register

b7 b6 b5 b4 b3 b2 b1 b0

0	0			0	0		

Symbol	Address	After Reset
TCSS	008Eh	00h

Bit Symbol	Bit Name	Function	RW
TXCK0	Timer X Count Source Select Bit(1)	b1 b0 0 0 : f1 0 1 : f8 1 0 : fRING 1 1 : f2	RW
TXCK1			RW
— (b3-b2)	Reserved Bit	Set to “0”	RW
TZCK0	Timer Z Count Source Select Bit(1)	b5 b4 0 0 : f1 0 1 : f8 1 0 : Selects Timer X underflow 1 1 : f2	RW
TZCK1			RW
— (b7-b6)	Reserved Bit	Set to “0”	RW

NOTES :

1. Do not switch a count source during a count operation. Stop the timer count before switching a count source.

Figure 13.3 PREX, TX and TCSS Registers

13.1.1 Timer Mode

Timer mode is mode to count the count source which is internally generated (See **Table 13.2 Specification of Timer Mode**). Figure 13.4 shows the TXMR Register in Timer Mode.

Table 13.2 Specification of Timer Mode

Item	Specification
Count Source	f1, f2, f8, fRING
Count Operation	• Decrement • When the timer underflows, the contents in the reload register is reloaded and the count is inherited
Divide Ratio	1/(n+1)(m+1) n: setting value of PREX register, m: setting value of TX register
Count Start Condition	Write “1” (count starts) to the TXS bit in the TXMR register
Count Stop Condition	Write “0” (count stops) to the TXS bit in the TXMR register
Interrupt Request Generation Timing	When Timer X underflows [Timer X interrupt]
$\overline{\text{INT10}}$/CNTR00, $\overline{\text{INT11}}$/CNTR01 Pin Function	Programmable I/O port, or $\overline{\text{INT1}}$ interrupt input
$\overline{\text{CNTR0}}$ Pin Function	Programmable I/O port
Read from Timer	The count value can be read by reading the TX and PREX registers
Write to Timer	• When writing to the TX and PREX registers while the count stops, the value is written to both the reload register and counter. • When writing to the TX and PREX registers during the count, the value is written to each reload register of the TX and PREX registers at the following count source input and the data is transferred to the counter at the second count source input and the count re-starts at the third count source input.

Timer X Mode Register

b7	b6	b5	b4	b3	b2	b1	b0
0	0	0	0	0		0	0

Symbol	Address	After Reset
TXMR	008Bh	00h

Bit Symbol	Bit Name	Function	RW
TXMOD0	Operating Mode Select Bit 0, 1	b1 b0 0 0 : Timer mode or pulse period measurement mode	RW
TXMOD1			RW
R0EDG	$\overline{\text{INT1}}$/CNTR0 Signal Polarity Switch Bit(1, 2)	0 : Rising edge 1 : Falling edge	RW
TXS	Timer X Count Start Flag(3)	0 : Stops counting 1 : Starts counting	RW
TXOCNT	Set to “0” in timer mode		RW
TXMOD2	Operating Mode Select Bit 2	0 : Other than pulse period measurement mode	RW
TXEDG	Set to “0” in timer mode		RW
TXUND	Set to “0” in timer mode		RW

NOTES :

1. The IR bit in the INT1IC register may be set to “1” (requests interrupt) when the R0EDG bit is rewritten. Refer to **20.2.5 Changing Interrupt Factor**.
2. This bit is used to select the polarity of $\overline{\text{INT1}}$ interrupt in timer mode.
3. Refer to **20.4.2 Timer X** for precautions on the TXS bit.

Figure 13.4 TXMR Register in Timer Mode

13.1.2 Pulse Output Mode

Pulse output mode is mode to count the count source internally generated and outputs the pulse which inverts the polarity from the CNTR0 pin each time the timer underflows (See **Table 13.3 Specification of Pulse Output Mode**). Figure 13.5 shows TXMR Register in Pulse Output Mode.

Table 13.3 Specification of Pulse Output Mode

Item	Specification
Count Source	f1, f2, f8, fRING
Count Operation	• Decrement • When the timer underflows, the contents in the reload register is reloaded and the count is inherited
Divide Ratio	1/(n+1)(m+1) n: setting value of PREX register, m: setting value of TX register
Count Start Condition	Write “1” (count starts) to the TXS bit in the TXMR register
Count Stop Condition	Write “0” (count stops) to the TXS bit in the TXMR register
Interrupt Request Generation Timing	When Timer X underflows [Timer X interrupt]
$\overline{\text{INT10}}$/CNTR00 Pin Function	Pulse output
$\overline{\text{CNTR0}}$ Pin Function	Programmable I/O port or inverted output of CNTR0
Read from timer	The count value can be read by reading the TX and PREX registers.
Write to Timer	• When writing to the TX and PREX registers while the count stops, the value is written to both the reload register and counter. • When writing to the TX and PREX registers during the count, the value is written to each reload register of the TX and PREX registers at the following count source input and the data is transferred to the counter at the second count source input and the count re-starts at the third count source input.
Select Function	• $\overline{\text{INT1}}$/CNTR0 signal polarity switch function The R0EDG bit can select the polarity level when the pulse output starts(1) • Inverted pulse output function The pulse which inverts the polarity of the CNTR0 output can be output from the $\overline{\text{CNTR0}}$ pin (selected by TXOCNT bit)

NOTES:

1. The level of the output pulse becomes the level when the pulse output starts when the TX register is written to.

Timer X Mode Register

b7	b6	b5	b4	b3	b2	b1	b0
0	0	0				0	1

Symbol	Address	After Reset
TXMR	008Bh	00h

Bit Symbol	Bit Name	Function	RW
TXMOD0	Operating Mode Select Bit 0, 1	b1 b0 0 1 : Pulse output mode	RW
TXMOD1			RW
R0EDG	$\overline{\text{INT1}}$/CNTR0 Signal Polarity Switch Bit(1)	0 : CNTR0 signal output starts at "H" 1 : CNTR0 signal output starts at "L"	RW
TXS	Timer X Count Start Flag(2)	0 : Stops counting 1 : Starts counting	RW
TXOCNT	P3_7/$\overline{\text{CNTR0}}$ Select Bit	0 : Port P3_7 1 : $\overline{\text{CNTR0}}$ output	RW
TXMOD2	Set to "0" in pulse output mode		RW
TXEDG	Set to "0" in pulse output mode		RW
TXUND	Set to "0" in pulse output mode		RW

NOTES :

1. The IR bit in the INT1IC register may be set to "1" (requests interrupt) when the R0EDG bit is rewritten. Refer to **20.2.5 Changing Interrupt Factor**.
2. Refer to **20.4.2 Timer X** for precautions on the TXS bit.

Figure 13.5 TXMR Register in Pulse Output Mode

13.1.3 Event Counter Mode

Event counter mode is mode to count an external signal which inputs from the $\overline{\text{INT1}}$/CNTR0 pin (See **Table 13.4 Specification of Event Counter Mode**). Figure 13.6 shows TXMR Register in Event Counter Mode.

Table 13.4 Specification of Event Counter Mode

Item	Specification
Count Source	External signal which is input to CNTR0 pin (Active edge is selectable by software)
Count Operation	• Decrement • When the timer underflows, the contents in the reload register is reloaded and the count is inherited
Divide Ratio	1/(n+1)(m+1) n: setting value of PREX register, m: setting value of TX register
Count Start Condition	Write “1” (count starts) to the TXS bit in the TXMR register
Count Stop Condition	Write “0” (count stops) to the TXS bit in the TXMR register
Interrupt Request Generation Timing	• When Timer X underflows [Timer X interrupt]
$\overline{\text{INT10}}$/CNTR00, $\overline{\text{INT11}}$/CNTR01 Pin Function	Count source input ($\overline{\text{INT1}}$ interrupt input)
$\overline{\text{CNTR0}}$ Pin Function	Programmable I/O port
Read from Timer	The count value can be read by reading the TX and PREX registers.
Write to Timer	• When writing to the TX and PREX registers while the count stops, the value is written to both the reload register and counter. • When writing to the TX and PREX registers during the count, the value is written to each reload register of the TX and PREX registers at the following count source input and the data is transferred to the counter at the second count source input and the count re-starts at the third count source input.
Select Function	• $\overline{\text{INT1}}$/CNTR0 signal polarity switch function The R0EDG bit can select the active edge of the count source. • Count source input pin select function The CNTRSEL bit in the UCON register can select the CNTR00 or CNTR01 pin

Timer X Mode Register

b7	b6	b5	b4	b3	b2	b1	b0
0	0	0	0			1	0

Symbol	Address	After Reset
TXMR	008Bh	00h

Bit Symbol	Bit Name	Function	RW
TXMOD0	Operating Mode Select Bit 0, 1	b1 b0 1 0 : Event Counter Mode	RW
TXMOD1			RW
R0EDG	$\overline{\text{INT1}}$/CNTR0 Signal Polarity Switch Bit(1)	0 : Rising edge 1 : Falling edge	RW
TXS	Timer X Count Start Flag(2)	0 : Stops counting 1 : Starts counting	RW
TXOCNT	Set to “0” in event counter mode		RW
TXMOD2	Set to “0” in event counter mode		RW
TXEDG	Set to “0” in event counter mode		RW
TXUND	Set to “0” in event counter mode		RW

NOTES :

1. The IR bit in the INT1IC register may be set to “1” (requests interrupt) when the R0EDG bit is rewritten. Refer to **20.2.5 Changing Interrupt Factor**.
2. Refer to **20.4.2 Timer X** for precautions on the TXS bit.

Figure 13.6 TXMR Register in Event Counter Mode

13.1.4 Pulse Width Measurement Mode

Pulse width measurement mode is mode to measure the pulse width of an external signal which inputs from the $\overline{\text{INT1}}$/CNTR0 pin (See **Table 13.5 Specification of Pulse Width Measurement Mode**). Figure 13.7 shows the TXMR Register in Pulse Width Measurement Mode. Figure 13.8 shows an Operating Example in Pulse Width Measurement Mode.

Table 13.5 Specification of Pulse Width Measurement Mode

Item	Specification
Count Source	f1, f2, f8, fRING
Count Operation	• Decrement • Continuously counts the selected signal only when the measurement pulse is "H" level, or conversely only "L" level. • When the timer underflows, the contents in the reload register is reloaded and the count is inherited
Count Start Condition	Write "1" (count starts) to the TXS bit in the TXMR register
Count Stop Condition	Write "0" (count stops) to the TXS bit in the TXMR register
Interrupt Request Generation Timing	• When Timer X underflows [Timer X interrupt] • Rising or falling of the CNTR0 input (end of measurement period) [$\overline{\text{INT1}}$ interrupt]
$\overline{\text{INT10}}$/CNTR00, $\overline{\text{INT11}}$/CNTR01 Pin Function	Measurement pulse input ($\overline{\text{INT1}}$ interrupt input)
$\overline{\text{CNTR0}}$ Pin Function	Programmable I/O port
Read from Timer	The count value can be read by reading the TX and PREX registers.
Write to Timer	• When writing to the TX and PREX registers while the count stops, the value is written to both the reload register and counter. • When writing to the TX and PREX registers during the count, the value is written to each reload register of the TX and PREX registers at the following count source input and the data is transferred to the counter at the second count source input and the count re-starts at the third count source input.
Select Function	• $\overline{\text{INT1}}$/CNTR0 signal polarity switch function The R0EDG bit can select during "H" or "L" level as the input pulse measurement • Measurement pulse input pin select function The CNTRSEL bit in the UCON register can select the CNTR00 or CNTR01 pin

Timer X Mode Register

b7	b6	b5	b4	b3	b2	b1	b0
0	0	0	0			1	1

Symbol	Address	After Reset
TXMR	008Bh	00h

Bit Symbol	Bit Name	Function	RW
TXMOD0	Operating Mode Select Bit 0, 1	b1 b0 1 1 : Pulse width measurement mode	RW
TXMOD1			RW
R0EDG	$\overline{\text{INT1}}$/CNTR0 Signal Polarity Switch Bit(1)	[CNTR0] 0 : Measures "L" level width 1 : Measures "H" level width [$\overline{\text{INT1}}$] 0 : Rising edge 1 : Falling edge	RW
TXS	Timer X Count Start Flag(2)	0 : Stops counting 1 : Starts counting	RW
TXOCNT	Set to "0" in pulse width measurement mode		RW
TXMOD2	Set to "0" in pulse width measurement mode		RW
TXEDG	Set to "0" in pulse width measurement mode		RW
TXUND	Set to "0" in pulse width measurement mode		RW

NOTES :

1. The IR bit in the INT1IC register may be set to "1" (requests interrupt) when the R0EDG bit is rewritten. Refer to **20.2.5 Changing Interrupt Factor**.
2. Refer to **20.4.2 Timer X** for precautions on the TXS bit.

Figure 13.7 TXMR Register in Pulse Width Measurement Mode

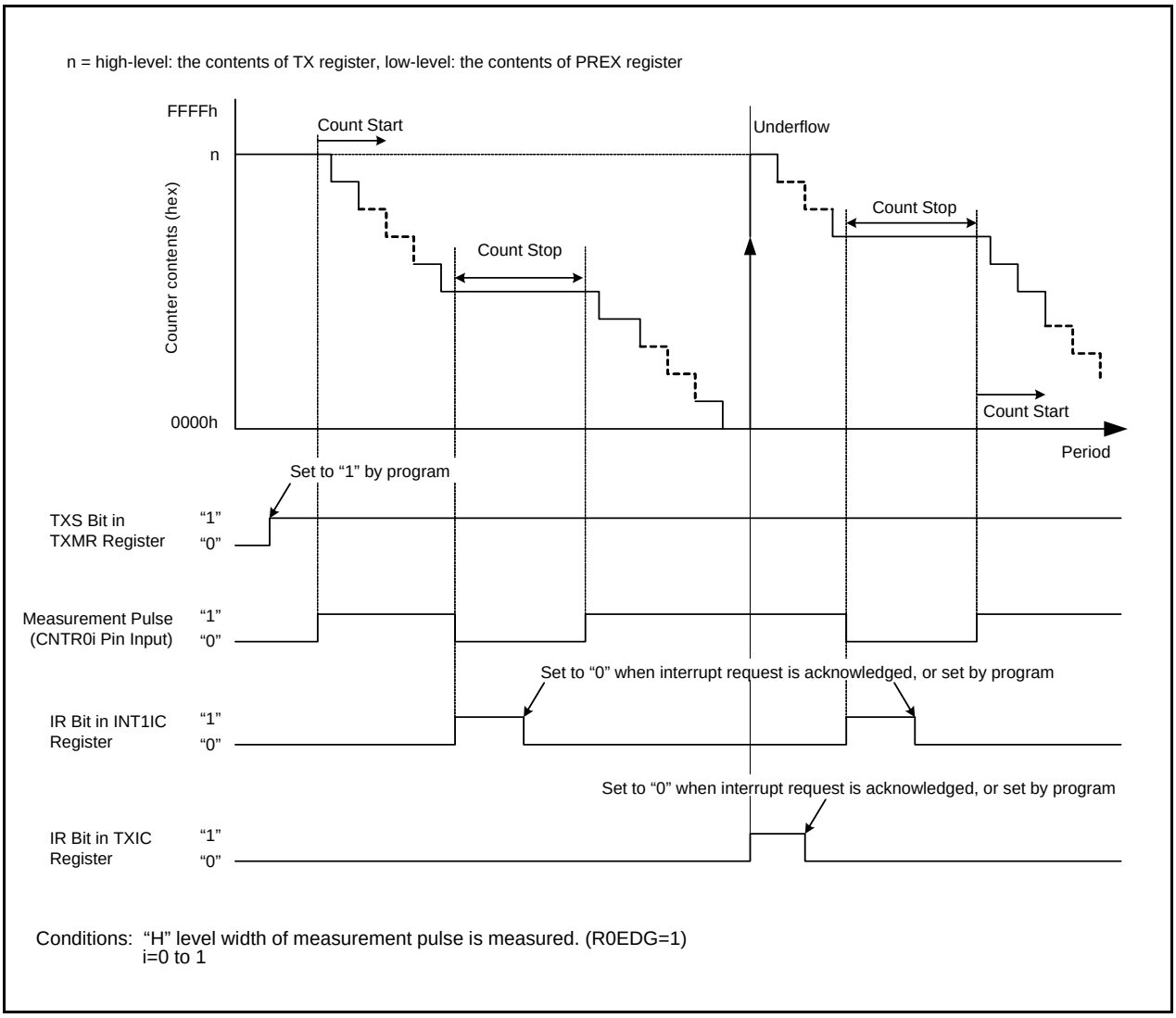

Figure 13.8 Operating Example in Pulse Width Measurement Mode

13.1.5 Pulse Period Measurement Mode

Pulse period measurement mode is mode to measure the pulse period of an external signal which inputs from the $\overline{\text{INT1}}$/CNTR0 pin (See **Table 13.6 Specification of Pulse Period Measurement Mode**). Figure 13.9 shows the TXMR Register in Pulse Period Measurement Mode. Figure 13.10 shows an Operating Example in Pulse Period Measurement Mode.

Table 13.6 Specification of Pulse Period Measurement Mode

Item	Specification
Count Source	f1, f2, f8, fRING
Count Operation	• Decrement • After an active edge of measurement pulse is input, contents for the read-out buffer are retained at the first underflow of prescaler X. Then timer X reloads contents in the reload register at the second underflow of prescaler X and continues counting.
Count Start Condition	Write “1” (count start) to the TXS bit in the TXMR register
Count Stop Condition	Write “0” (count stop) to TXS bit in TXMR register
Interrupt Request Generation Timing	• When timer X underflows or reloads [timer X interrupt] • Rising or falling of CNTR0 input (end of measurement period) [$\overline{\text{INT1}}$ interrupt]
$\overline{\text{INT10}}$/CNTR00, $\overline{\text{INT11}}$/CNTR01 Pin Function	Measurement pulse input(1) ($\overline{\text{INT1}}$ interrupt input)
$\overline{\text{CNTR0}}$ Pin Function	Programmable I/O port
Read from Timer	Contents in the read-out buffer can be read by reading the TX register. The value retained in the read-out buffer is released by reading TX register.
Write to Timer	• When writing to the TX and PREX registers while the count stops, the value is written to both the reload register and counter. • When writing to the TX and PREX registers during the count, the value is written to each reload register of the TX and PREX registers at the following count source input and the data is transferred to the counter at the second count source input and the count re-starts at the third count source input.
Select Function	• $\overline{\text{INT1}}$/CNTR0 polarity switch function The R0EDG bit can select the measurement period of input pulse. • Measurement pulse input pin select function The CNTRSEL bit in the UCON register can select the CNTR00 or CNTR01 pin.

NOTES:

1. Input the pulse whose period is longer than twice of the prescaler X period. Input the longer pulse for “H” width and “L” width than the prescaler X period. If the shorter pulse than the period is input to the CNTR0 pin, the input may be disabled.

Timer X Mode Register

b7	b6	b5	b4	b3	b2	b1	b0
		1	0			0	0

Symbol	Address	After Reset
TXMR	008Bh	00h

Bit Symbol	Bit Name	Function	RW
TXMOD0	Operating Mode Select Bit 0, 1	b1 b0 0 0 : Timer mode or pulse period measurement mode	RW
TXMOD1			RW
R0EDG	$\overline{\text{INT1}}$/CNTR0 Signal Polarity Switch Bit(1)	[CNTR0] 0 : Measures measurement pulse from one rising edge to next rising edge 1 : Measures measurement pulse from one falling edge to next falling edge [$\overline{\text{INT1}}$] 0 : Rising edge 1 : Falling edge	RW
TXS	Timer X Count Start Flag(3)	0 : Stops counting 1 : Starts counting	RW
TXOCNT	Set to “0” in pulse width measurement mode		RW
TXMOD2	Operating Mode Select Bit 2	1 : Pulse period measurement mode	RW
TXEDG(2)	Active Edge Reception Flag	0 : Active edge not received 1 : Active edge received	RW
TXUND(2)	Timer X underflow flag	0 : No underflow 1 : Underflow	RW

NOTES :

1. The IR bit in the INT1IC register may be set to “1” (requests interrupt) when the R0EDG bit is rewritten. Refer to **20.2.5 Changing Interrupt Factor**.
2. This bit is set to “0” by writing “0” in a program. (It remains unchanged even if writing “1”)
3. Refer to **20.4.2 Timer X** for precautions on the TXS bit.

Figure 13.9 TXMR Register in Pulse Period Measurement Mode

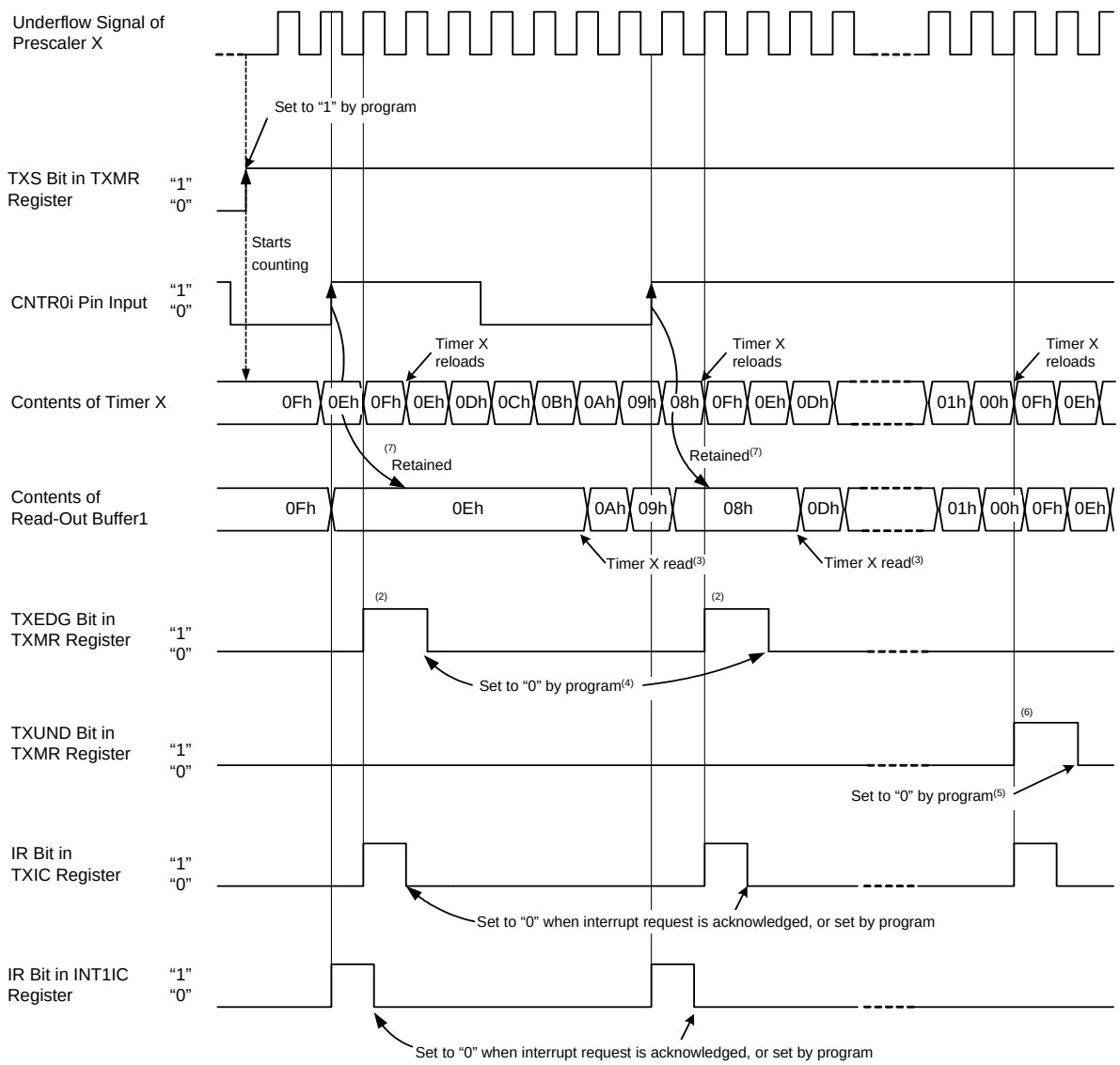

Conditions: A period from one rising edge to the next rising edge of measurement pulse is measured (R0EDG=0) with the default value of the TX register as 0Fh.
i=0 to 1

NOTES :
1. The contents of the read-out buffer can be read when the TX register is read in pulse period measurement mode.
2. After an active edge of measurement pulse is input, the TXEDG bit in the TXMR register is set to "1" (active edge found) when the prescale X underflows for the second time.
3. The TX register should be read before the next active edge is input after the TXEDG bit is set to "1" (active edge found). The contents in the read-out buffer is retained until the TX register is read. If the TX register is not read before the next active edge is input, the measured result of the previous period is retained.
4. When set to "0" by program, use a MOV instruction to write "0" to the TXEDG in the TXMR register. At the same time, write "1" to the TXUND bit.
5. When set to "0" by program, use a MOV instruction to write "0" to the TXUND in the TXMR register. At the same time, write "1" to the TXEDG bit.
6. The TXUND and TXEDG bits are both set to "1" if the timer underflows and reloads on an active edge simultaneously. In this case, the validity of the TXUND bit should be determined by the contents of the read-out buffer.
7. If the CNTR0 active edge is input, when the prescaler X underflow signal is "H" level, its count value is the one of the read buffer. If "L" level, the following count value is the one of the read buffer.

Figure 13.10 Operating Example in Pulse Period Measurement Mode

13.2 Timer Z

Timer Z is an 8-bit timer with an 8-bit prescaler. The prescaler and timer consist of the reload register and counter. The reload register and counter are allocated at the same address. Refer to the **Tables 13.7 to 13.12 for the Specification of Each Modes**. Timer Z contains the timer Z primary and timer Z secondary as the reload register.
Figure 13.11 shows the Block Diagram of Timer Z. Figures 13.12 to 13.15 show the TZMR, PREZ, TZSC, TZPR, TZOC, PUM, and TCSS registers.

Timer Z contains the following four operating modes.

- Timer mode: The timer counts an internal count source or Timer X underflow.
- Programmable waveform generation mode: The timer outputs pulses of a given width successively
- Programmable one-shot generation mode: The timer outputs one-shot pulse.
- Programmable wait one-shot generation mode: The timer outputs delayed one-shot pulse.

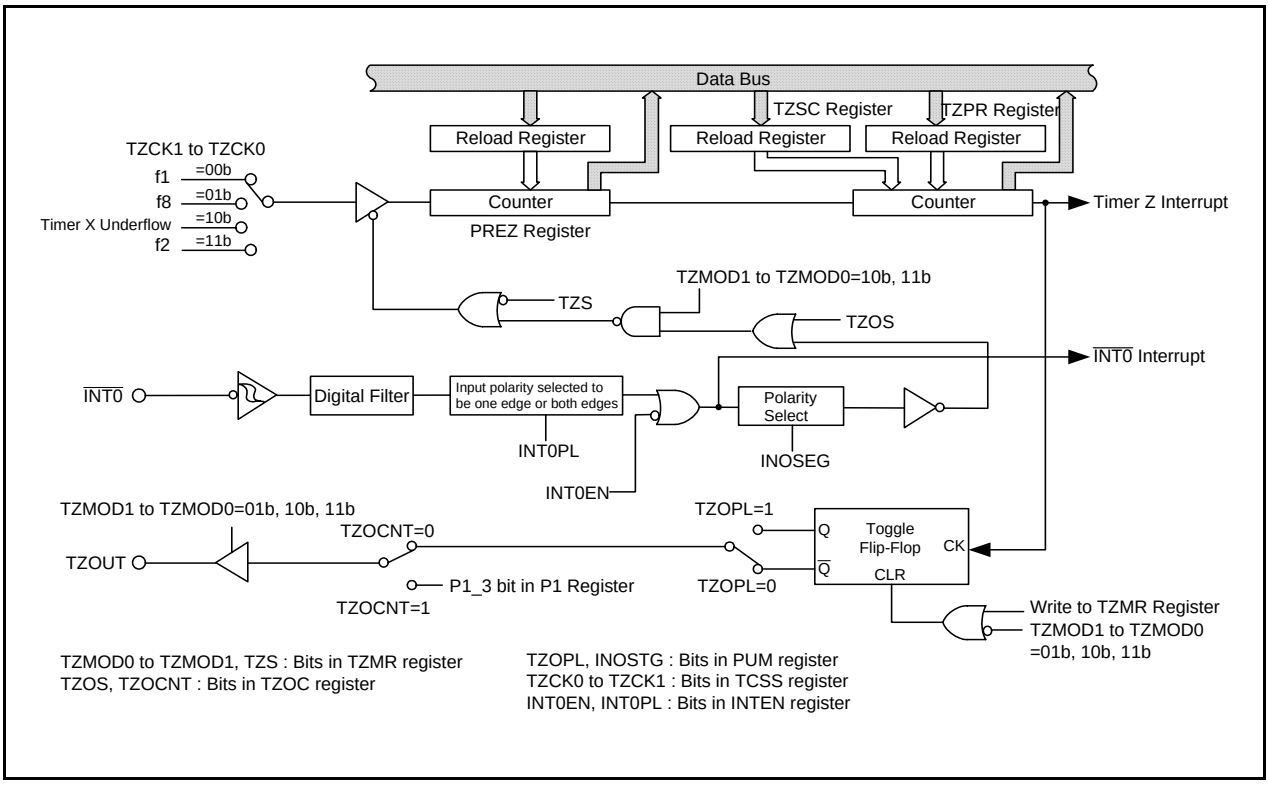

Figure 13.11 Block Diagram of Timer Z

Timer Z Mode Register

b7	b6	b5	b4	b3	b2	b1	b0
				0	0	0	0

Symbol	Address	After Reset
TZMR	0080h	00h

Bit Symbol	Bit Name	Function	RW
— (b3-b0)	Reserved Bit	Set to “0”	RW
TZMOD0	Timer Z Operating Mode Bit	b5 b4 0 0 : Timer mode 0 1 : Programmable waveform generation mode 1 0 : Programmable one-shot generation mode 1 1 : Programmable wait one-shot generation mode	RW
TZMOD1			RW
TZWC	Timer Z Write Control Bit	Functions varies depending on operating mode	RW
TZS	Timer Z Count Start Flag(1)	0 : Stops counting 1 : Starts counting	RW

NOTES :

1. Refer to **20.4.3 Timer Z** for precautions on the TZS bit.

Figure 13.12 TZMR Register

Prescaler Z Register

b7 b0

Symbol	Address	After Reset
PREZ	0085h	FFh

Mode	Function	Setting Range	RW
Timer Mode	Counts internal count source or Timer X underflow	00h to FFh	RW
Programmable Waveform Generation Mode	Counts internal count source or Timer X underflow	00h to FFh	RW
Programmable One-shot Generation Mode	Counts internal count source or Timer X underflow	00h to FFh	RW
Programmable Wait One-shot Generation Mode	Counts internal count source or Timer X underflow	00h to FFh	RW

Timer Z Secondary Register

b7 b0

Symbol	Address	After Reset
TZSC	0086h	FFh

Mode	Function	Setting Range	RW
Timer Mode	Disabled	—	—
Programmable Waveform Generation Mode	Counts underflow of Prescaler Z(1)	00h to FFh	WO(2)
Programmable One-shot Generation Mode	Disabled	—	—
Programmable Wait One-shot Generation Mode	Counts underflow of Prescaler Z (one-shot width is counted)	00h to FFh	WO

NOTES :

1. Each value in the TZPR register and TZSC register is reloaded to the counter alternately and counted.
2. The count value can be read out by reading the TZPR register even when the secondary period is being counted.

Timer Z Primary Register

b7 b0

Symbol	Address	After Reset
TZPR	0087h	FFh

Mode	Function	Setting Range	RW
Timer Mode	Counts underflow of Prescaler Z	00h to FFh	RW
Programmable Waveform Generation Mode	Counts underflow of Prescaler Z(1)	00h to FFh	RW
Programmable One-shot Generation Mode	Counts underflow of Prescaler Z (counts one-shot width)	00h to FFh	RW
Programmable Wait One-shot Generation Mode	Counts underflow of Prescaler Z (counts wait period)	00h to FFh	RW

NOTES :

1. Each value in the TZPR register and TZSC register is reloaded to the counter alternately and counted.

Figure 13.13 PREZ, TZSC and TZPR Registers

Timer Z Output Control Register[3]

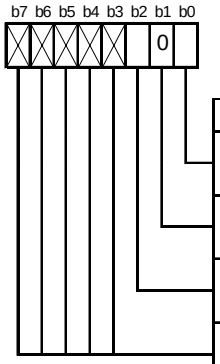

Symbol	Address	After Reset
TZOC	008Ah	00h

Bit Symbol	Bit Name	Function	RW
TZOS	Timer Z One-shot Start Bit[1]	0 : One-shot stops 1 : One-shot starts	RW
— (b1)	Reserved Bit	Set to “0”	RW
TZOCNT	Timer Z Programmable Waveform Generation Output Switch Bit[2]	0 : Outputs programmable waveform 1 : Outputs value in P1_3 port register	RW
— (b7-b3)	Nothing is assigned. When write, set to “0”. When read, its content is “0”.		—

NOTES :

1. This bit is set to “0” when the output of one-shot waveform is completed. Set the TZOS bit to “0” when the waveform output is stopped by setting the TZS bit in the TZMR register to “0” (count stop) during the one-shot waveform output.
2. This bit is enabled only when operating in programmable waveform generation mode.
3. If executing an instruction which changes this register when the TZOS bit is set to “1” (during count), the TZOS bit is automatically set to “0” (one-shot stop) when the count is completed while the instruction is executed. If this causes some problems, execute an instruction which changes this register when the TZOS bit is set to “0” (one-shot stop).

Timer Z Waveform Output Control Register

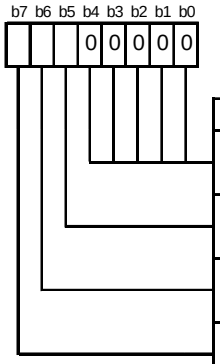

Symbol	Address	After Reset
PUM	0084h	00h

Bit Symbol	Bit Name	Function	RW
— (b4-b0)	Reserved Bit	Set to “0”	RW
TZOPL	Timer Z Output Level Latch	Function varies depending on operating mode	RW
INOSTG	$\overline{\text{INT0}}$ Pin One-shot Trigger Control Bit (Timer Z)[2]	0 : $\overline{\text{INT0}}$ pin one-shot trigger disabled 1 : $\overline{\text{INT0}}$ pin one-shot trigger enabled	RW
INOSEG	$\overline{\text{INT0}}$ Pin One-shot Trigger Polarity Select Bit (Timer Z)[1]	0 : Falling edge trigger 1 : Rising edge trigger	RW

NOTES :

1. When the INOSEG bit is enabled only when the INT0PL bit in the INTEN register is set to “0” (one edge).
2. Set the INOSTG bit to “1” when setting the INT0EN bit in the INTEN register and the INOSEG bit in the PUM register.

Figure 13.14 TZOC and PUM Registers

Timer Count Source Setting Register

b7	b6	b5	b4	b3	b2	b1	b0
0	0			0	0		

Symbol	Address	After Reset
TCSS	008Eh	00h

Bit Symbol	Bit Name	Function	RW
TXCK0	Timer X Count Source Select Bit(1)	b1 b0 0 0 : f1 0 1 : f8 1 0 : fRING 1 1 : f2	RW
TXCK1			RW
— (b3-b2)	Reserved Bit	Set to “0”	RW
TZCK0	Timer Z Count Source Select Bit(1)	b5 b4 0 0 : f1 0 1 : f8 1 0 : Selects Timer X underflow 1 1 : f2	RW
TZCK1			RW
— (b7-b6)	Reserved Bit	Set to “0”	RW

NOTES :

1. Do not switch a count source during a count operation. Stop the timer count before switching a count source.

Figure 13.15 TCSS Register

13.2.1 Timer Mode

Timer mode is mode to count a count source which is internally generated or Timer X underflow (see **Table 13.7 Specification of Timer Mode**). The TZSC register is unused in timer mode. Figure 13.16 shows the TZMR and PUM Registers in Timer Mode.

Table 13.7 Specification of Timer Mode

Item	Specification
Count Source	f1, f2, f8, Timer X underflow
Count Operation	• Decrement • When the timer underflows, it reloads the reload register contents before the count continues (When Timer Z underflows, the contents of Timer Z primary reload register is reloaded)
Divide Ratio	1/(n+1)(m+1) fi: Count source frequency n: setting value in PREZ register, m: setting value in TZPR register
Count Start Condition	Write “1” (count starts) to the TZS bit in the TZMR register
Count Stop Condition	Write “0” (count stops) to the TZS bit in the TZMR register
Interrupt Request Generation Timing	• When Timer Z underflows [Timer Z interrupt]
TZOUT Pin Function	Programmable I/O port
$\overline{\text{INT0}}$ Pin Function	Programmable I/O port, or $\overline{\text{INT0}}$ interrupt input
Read from Timer	The count value can be read out by reading the TZPR and PREZ registers
Write to Timer(1)	• When writing to the TZPR and PREZ registers while the count stops, the value is written to both the reload register and counter. • When writing to the TZPR and PREZ registers during the count while the TZWC bit is set to “0” (writing to the reload register and counter simultaneously), the value is written to each reload register of the TZPR and PREZ registers at the following count source input and the data is transferred to the counter at the second count source input and the count re-starts at the third count source input. When the TZWC bit is set to “1” (writing to only the reload register), the value is written to each reload register of the TZPR and PREZ registers (the data is transferred to the counter at the following reload).

NOTES:

1. The IR bit in the TZIC register is set to “1” (interrupt requested) when writing to the TZPR or PREZ register while both of the following conditions are met.

   <Conditions>

   • TZWC bit in TZMR register is set to “0” (write to reload register and counter simultaneously)

   • TZS bit in TZMR register is set to “1” (count starts)

   When writing to the TZPR or PREZ register in the above state, disable an interrupt before writing.

Timer Z Mode Register

b7	b6	b5	b4	b3	b2	b1	b0
		0	0	0	0	0	0

Symbol	Address	After Reset
TZMR	0080h	00h

Bit Symbol	Bit Name	Function	RW
— (b3-b0)	Reserved Bit	Set to "0"	RW
TZMOD0	Timer Z Operating Mode Bit	b5 b4 0 0 : Timer mode	RW
TZMOD1			RW
TZWC	Timer Z Write Control Bit(1)	0 : Write to reload register and counter 1 : Write to reload register only	RW
TZS	Timer Z Count Start Flag(2)	0 : Stops counting 1 : Starts counting	RW

NOTES :

1. When the TZS bit is set to "1" (count start), the setting value in the TZWC bit is enabled. When the TZWC bit is set to "0", Timer Z count value is written to both reload register and counter. Timer Z count value is written to the reload register only. When the TZS bit is set to "0" (count stop), Timer Z count value is written to both reload register and counter regardless of the setting value in the TZWC bit.
2. Refer to **20.4.3 Timer Z** for precautions on the TZS bit.

Timer Z Waveform Output Control Register

b7	b6	b5	b4	b3	b2	b1	b0
0	0	0	0	0	0	0	0

Symbol	Address	After Reset
PUM	0084h	00h

Bit Symbol	Bit Name	Function	RW
— (b4-b0)	Reserved Bit	Set to "0"	RW
TZOPL	Timer Z Output Level Latch	Set to "0" in timer mode	RW
INOSTG	$\overline{\text{INT0}}$ Pin One-shot Trigger Control Bit	Set to "0" in timer mode	RW
INOSEG	$\overline{\text{INT0}}$ Pin One-shot Trigger Polarity Select Bit	Set to "0" in timer mode	RW

Figure 13.16 TZMR and PUM Registers in Timer Mode

13.2.2 Programmable Waveform Generation Mode

Programmable waveform generation mode is mode to invert the signal output from the TZOUT pin each time the counter underflows, while the values in the TZPR and TZSC registers are counted alternately (See **Table 13.8 Specification of Programmable Waveform Generation Mode**). A counting starts by counting the value set in the TZPR register. Figure 13.17 shows TZMR and PUM Registers in Programmable Waveform Generation Mode. Figure 13.18 shows Operating Example of Timer Z in Programmable Waveform Generation Mode.

Table 13.8 Specification of Programmable Waveform Generation Mode

Item	Specification
Count Source	f1, f2, f8, Timer X underflow
Count Operation	• Decrement • When the timer underflows, it reloads the contents of the primary reload and secondary reload registers alternately before the count continues.
Width and Period of Output Waveform	Primary period: (n+1)(m+1)/fi Secondary period: (n+1)(p+1)/fi Period: (n+1){(m+1)+(p+1)}/fi fi: Count source frequency n: Setting value in PREZ register, m: setting value in TZPR register, p: setting value in TZSC register
Count Start Condition	Write “1” (count start) to the TZS bit in the TZMR register
Count Stop Condition	Write “0” (count stop) to the TZS bit in the TZMR register
Interrupt Request Generation Timing	In half of count source, after Timer Z underflows during secondary period (at the same time as the TZout output change) [Timer Z interrupt]
TZOUT Pin Function	Pulse output (When using this function as a programmable I/O port, set to timer mode.)
$\overline{\text{INT0}}$ Pin Function	Programmable I/O port, or $\overline{\text{INT0}}$ interrupt input
Read from timer	The count value can be read out by reading the TZPR and PREZ registers(1).
Write to timer	The value written to the TZSC, PREZ and TZPR registers is written to the reload register only(2)
Select function	• Output level latch select function The TZOPL bit can select the output level during primary and secondary periods. • Programmable waveform generation output switch function When the TZOCNT bit in the TZOC register is set to “0”, the output from the TZOUT pin is inverted synchronously when Timer Z underflows. And when setting to “1”, output the value in the P1_3 bit from the TZOUT pin(3)

NOTES:

1. Even when counting the secondary period, read out the TZPR register.
2. The setting value in the TZPR register and TZSC register are made effective by writing a value to the TZPR register. The set values are reflected to the waveform output beginning with the following primary period after writing to the TZPR register.
3. The TZOCNT bit is enabled by the followings.
   - When count starts.
   - When the timer Z interrupt request is generated. The contents after the TZOCNT bit is changed are reflected from the output of the following primary period.

Timer Z Mode Register

b7	b6	b5	b4	b3	b2	b1	b0
	1	0	1	0	0	0	0

Symbol	Address	After Reset
TZMR	0080h	00h

Bit Symbol	Bit Name	Function	RW
— (b3-b0)	Reserved Bit	Set to "0"	RW
TZMOD0	Timer Z Operating Mode Bit	b5 b4 0 1 : Programmable Waveform Generation Mode	RW
TZMOD1			RW
TZWC	Timer Z Write Control Bit	Set to "1" in programmable waveform generation mode(1)	RW
TZS	Timer Z Count Start Flag(2)	0 : Stops counting 1 : Starts counting	RW

NOTES :

1. When the TZS bit is set to "1" (count start), The count value is written to the reload register only. When the TZS bit is set to "0" (count stop), The count value is written to both reload register and counter.
2. Refer to **20.4.3 Timer Z** for precautions on the TZS bit.

Timer Z Waveform Output Control Register

b7	b6	b5	b4	b3	b2	b1	b0
0	0		0	0	0	0	0

Symbol	Address	After Reset
PUM	0084h	00h

Bit Symbol	Bit Name	Function	RW
— (b4-b0)	Reserved Bit	Set to "0"	RW
TZOPL	Timer Z Output Level Latch	0 : Outputs "H" for primary period Outputs "L" for secondary period Outputs "L" when the timer is stopped 1 : Outputs "L" for primary period Outputs "H" for secondary period Outputs "H" when the timer is stopped	RW
INOSTG	$\overline{\text{INT0}}$ Pin One-shot Trigger Control Bit	Set to "0" in programmable waveform generation mode	RW
INOSEG	$\overline{\text{INT0}}$ Pin One-shot Trigger Polarity Select Bit	Set to "0" in programmable waveform generation mode	RW

Figure 13.17 TZMR and PUM Registers in Programmable Waveform Generation Mode

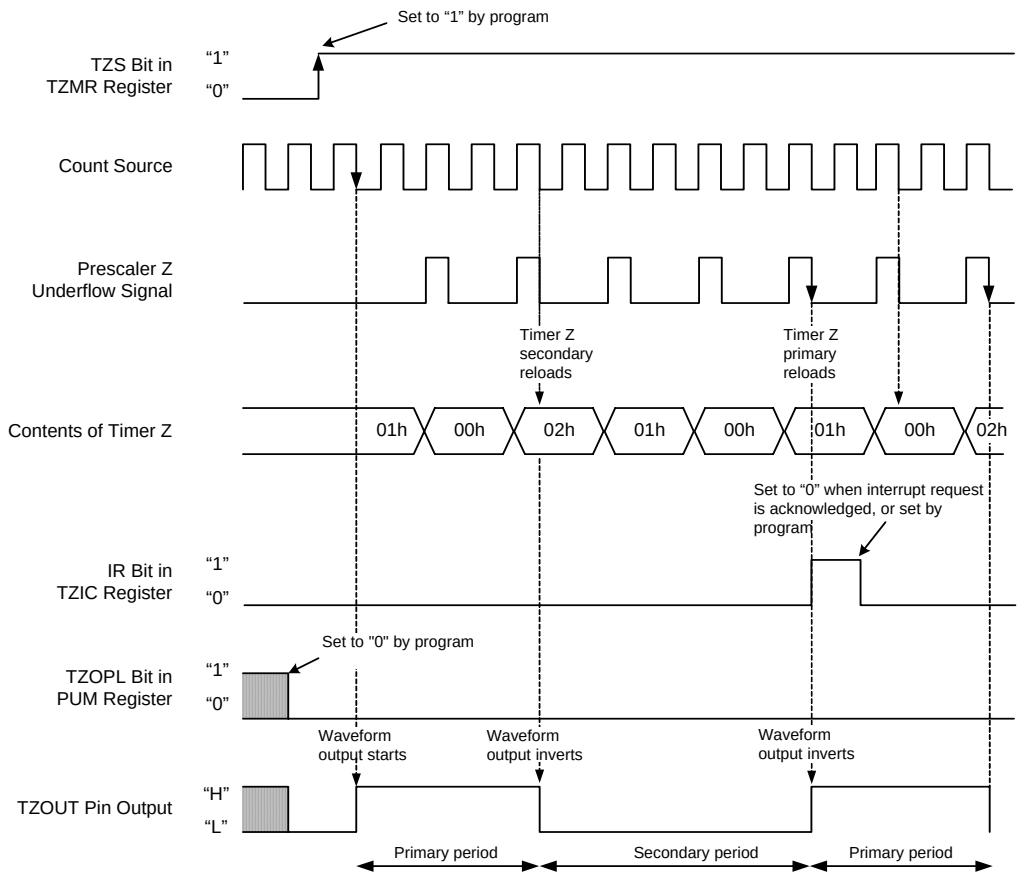

The above applies to the following conditions.
PREZ=01h, TZPR=01h, TZSC=02h
TZOC register TZOCNT bit = 0

Figure 13.18 Operating Example of Timer Z in Programmable Waveform Generation Mode

13.2.3 Programmable One-shot Generation Mode

Programmable one-shot generation mode is mode to output the one-shot pulse from the TZOUT pin by a program or an external trigger input (input to the $\overline{\text{INT0}}$ pin). (see **Table 13.9 Specification of Programmable One-Shot Generation Mode**). When a trigger is generated, the timer starts operating from the point only once for a given period equal to the set value in the TZPR register. The TZSC register is unused in this mode. Figure 13.19 shows the TZMR and PUM Registers in Programmable One-Shot Generation Mode. Figure 13.20 shows an Operating Example in Programmable One-Shot Generation Mode.

Table 13.9 Specification of Programmable One-Shot Generation Mode

Item	Specification
Count Source	f1, f2, f8, Timer X underflow
Count Operation	• Decrement the setting value in the TZPR register • When the timer underflows, it reloads the contents of the reload register before the count completes and the TZOS bit is set to “0” (one-shot stops). • When a count stops, the timer reloads the contents of the reload register before it stops.
One-Shot Pulse Output Time	(n+1)(m+1)/fi fi: Count source frequency, n: setting value in PREZ register, m: setting value in TZPR register
Count Start Condition	• Set the TZOS bit in the TZOC register to “1” (one-shot starts) (1) • Input active trigger to the $\overline{\text{INT0}}$ pin(2)
Count Stop Condition	• When reloading completes after the count value is set to “00h” • When the TZS bit in the TZMR register is set to “0” (count stops) • When the TZOS bit in the TZOC register is set to “0” (one-shot stops)
Interrupt Request Generation Timing	In half cycles of count source, after the timer underflows (at the same time as the TZOUT output ends) [Timer Z interrupt]
TZOUT Pin Function	Pulse output (When using this function as a programmable I/O port, set to timer mode.)
$\overline{\text{INT0}}$ Pin Function	• When the INOSTG bit in the PUM register is set to “0” ($\overline{\text{INT0}}$ one-shot trigger disabled) programmable I/O port or $\overline{\text{INT0}}$ interrupt input • When the INOSTG bit in the PUM register is set to “1” ($\overline{\text{INT0}}$ one-shot trigger enabled) external trigger ($\overline{\text{INT0}}$ interrupt input))
Read from Timer	The count value can be read out by reading the TZPR and PREZ registers.
Write to Timer	The value written to the TZPR and PREZ registers is written to the reload register only(3).
Select Function	• Output level latch select function The TZOPL bit can select the output level of the one-shot pulse waveform. • $\overline{\text{INT0}}$ pin one-shot trigger control and polarity select functions The INOSTG bit can select the trigger input from the $\overline{\text{INT0}}$ pin is active or inactive. Also, the INOSEG bit can select the active trigger polarity.

NOTES:
1. Set the TZS bit in the TZMR register to “1” (count starts).
2. Set the TZS bit to “1” (count starts), the INT0EN bit in the INTEN register to “1” (enables $\overline{\text{INT0}}$ input), and the INOSTG bit in the PUM register to “1” ($\overline{\text{INT0}}$ one-shot trigger enabled). A trigger which is input during the count cannot be acknowledged, however the $\overline{\text{INT0}}$ interrupt request is generated.
3. The set value is reflected at the following one-shot pulse after writing to the TZPR register.

Timer Z Mode Register

b7	b6	b5	b4	b3	b2	b1	b0
	1	1	0	0	0	0	0

Symbol	Address	After Reset
TZMR	0080h	00h

Bit Symbol	Bit Name	Function	RW
— (b3-b0)	Reserved Bit	Set to "0"	RW
TZMOD0	Timer Z Operating Mode Bit	b5 b4 1 0 : Programmable one-shot generation mode	RW
TZMOD1			RW
TZWC	Timer Z Write Control Bit	Set to "1" in programmable one-shot generation mode(1)	RW
TZS	Timer Z Count Start Flag(2)	0 : Stops counting 1 : Starts counting	RW

NOTES :

1. When the TZS bit is set to "1" (count start), The count value is written to the reload register only. When the TZS bit is set to "0" (count stop), The count value is written to both reload register and counter.
2. Refer to **20.4.3 Timer Z** for precautions on the TZS bit.

Timer Z Waveform Output Control Register

b7	b6	b5	b4	b3	b2	b1	b0
			0	0	0	0	0

Symbol	Address	After Reset
PUM	0084h	00h

Bit Symbol	Bit Name	Function	RW
— (b4-b0)	Reserved Bit	Set to "0"	RW
TZOPL	Timer Z Output Level Latch	0 : Outputs one-shot pulse "H" Outputs "L" when the timer is stopped 1 : Outputs one-shot pulse "L" Outputs "H" when the timer is stopped	RW
INOSTG	$\overline{\text{INT0}}$ Pin One-shot Trigger Control Bit(1)	0 : $\overline{\text{INT0}}$ pin one-shot trigger disabled 1 : $\overline{\text{INT0}}$ pin one-shot trigger enabled	RW
INOSEG	$\overline{\text{INT0}}$ Pin One-shot Trigger Polarity Select Bit(2)	0 : Falling edge trigger 1 : Rising edge trigger	RW

NOTES :

1. Set the INOSTG bit to "1" after the INT0EN bit in the INTEN register and the INOSEG bit in the PUM register are set. When setting the INOSTG bit to "1" ($\overline{\text{INT0}}$ pin one-shot trigger enabled), set the INT0F0 to INT0F1 bits in the INT0F register. Set the INOSTG bit to "0" ($\overline{\text{INT0}}$ pin one-shot trigger disabled) after the TZS bit in the TZMR register is set to "0" (count stop).
2. The INOSEG bit is enabled only when the INT0PL bit in the INTEN register is set to "0" (one edge).

Figure 13.19 TZMR and PUM Registers in Programmable One-Shot Generation Mode

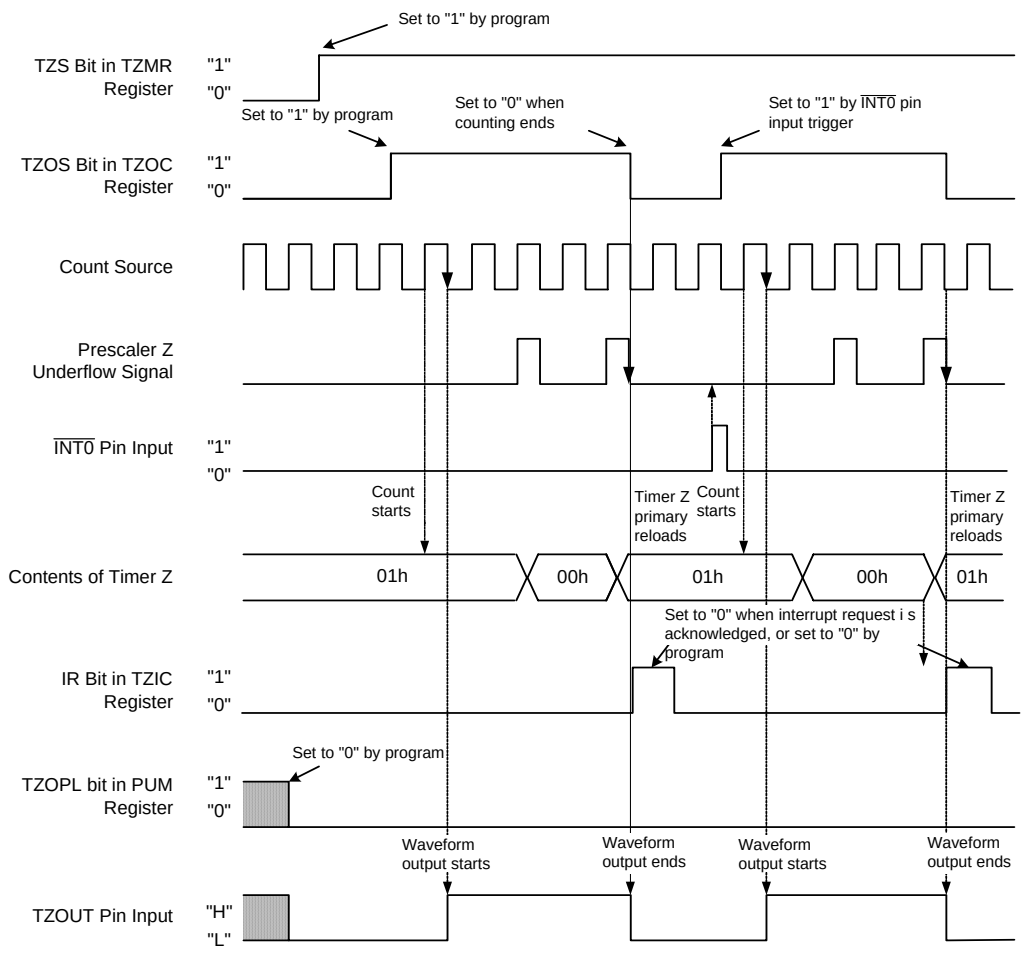

The above applies to the following conditions.
PREZ=01h, TZPR=01h
TZOPL bit in PUM register=0, INOSTG bit=1 (INT0 one-shot trigger enabled)
INOSEG bit=1 (edge trigger at rising edge)

Figure 13.20 Operating Example in Programmable One-Shot Generation Mode

13.2.4 Programmable Wait One-shot Generation Mode

Programmable wait one-shot generation mode is mode to output the one-shot pulse from the TZOUT pin by the external trigger input (input to the $\overline{\text{INT0}}$ pin) (see **Table 13.10 Specification of Programmable Wait One-Shot Generation Mode Specifications**). When a trigger is generated from this point, the timer starts outputting pulses only once for a given length of time equal to the setting value in the TZSC register after waiting for a given length of time equal to the setting value in the TZPR register. Figure 13.21 shows the TZMR and PUM Registers in Programmable Wait One-Shot Generation Mode. Figure 13.22 shows an Operating Example in Programmable Wait One-Shot Generation Mode.

Table 13.10 Specification of Programmable Wait One-Shot Generation Mode Specifications

Item	Specification
Count Source	f1, f2, f8, Timer X underflow
Count Operation	• Decrement the setting value in Timer Z primary • When a count of TZPR register underflows, the timer reloads the contents of the TZSC register before the count continues. • When a count of the TZSC register underflows, the timer reloads the contents of the TZPR register before the count completes and the TZOS bit is set to “0”. • When a count stops, the timer reloads the contents of the reload register before it stops.
Wait Time	(n+1)(m+1)/fi fi: Count source frequency n: setting value in PREZ register, m: setting value in TZPR register
One-Shot Pulse Output Time	(n+1)(p+1)/fi fi: Count source frequency n: setting value in PREZ register, p: setting value in TZSC register
Count Start Condition	• Set the TZOS bit in the TZOC register to “1” (one-shot starts)(1) • Input active trigger to the $\overline{\text{INT0}}$ pin(2)
Count Stop Condition	• When reloading completes after Timer Z underflows during secondary period • When the TZS bit in the TZMR register is set to “0” (count stops) • When the TZOS bit in the TZOC register is set to “0” (one-shot stops)
Interrupt Request Generation Timing	In half cycles of the count source after Timer Z underflows during secondary period (complete at the same time as waveform output from the TZOUT pin) [timer Z interrupt]
TZOUT Pin Function	Pulse output (When using this function as a programmable I/O port, set to timer mode.)
$\overline{\text{INT0}}$ Pin Function	• When the INOSTG bit in the PUM register is set to “0” ($\overline{\text{INT0}}$ one-shot trigger disabled), programmable I/O port or $\overline{\text{INT0}}$ interrupt input • When the INOSTG bit in the PUM register is set to “1” ($\overline{\text{INT0}}$ one-shot trigger enabled), external trigger ($\overline{\text{INT0}}$ interrupt input)
Read from Timer	The count value can be read out by reading the TZPR and PREZ registers.
Write to Timer	The value written to the TZPR register, PREZ and TZSC register is written to reload register only(3).
Select Function	• Output level latch select function The output level for the one-shot pulse waveform is selected by the TZOPL bit. • $\overline{\text{INT0}}$ pin one-shot trigger control function and polarity select function Trigger input from the $\overline{\text{INT0}}$ pin can be set to active or inactive by the INOSTG bit. Also, an active trigger's polarity can be selected by the INOSEG bit.

NOTES:
1. Set the TZS bit in the TZMR register to “1” (count starts).
2. Set the TZS bit to “1” (count starts), the INT0EN bit in the INTEN register to “1” (enables $\overline{\text{INT0}}$ input), and the INOSTG bit in the PUM register to “1” (enabling $\overline{\text{INT0}}$ one-shot trigger). A trigger which is input during the count cannot be acknowledged, however the $\overline{\text{INT0}}$ interrupt request is generated.
3. The setting values are reflected beginning with the following one-shot pulse after writing to the TZPR register.

Timer Z Mode Register

b7	b6	b5	b4	b3	b2	b1	b0
	1	1	1	0	0	0	0

Symbol	Address	After Reset
TZMR	0080h	00h

Bit Symbol	Bit Name	Function	RW
— (b3-b0)	Reserved Bit	Set to “0”	RW
TZMOD0	Timer Z Operating Mode Bit	b5 b4 1 1 : Programmable wait one-shot generation mode	RW
TZMOD1			RW
TZWC	Timer Z Write Control Bit	Set to “1” in programmable wait one-shot generation mode(1)	RW
TZS	Timer Z Count Start Flag(2)	0 : Stops counting 1 : Starts counting	RW

NOTES :

1. When the TZS bit is set to “1” (count start), The count value is written to the reload register only. When the TZS bit is set to “0” (count stop), The count value is written to both reload register and counter.
2. Refer to **20.4.3 Timer Z** for precautions on the TZS bit.

Timer Z Waveform Output Control Register

b7	b6	b5	b4	b3	b2	b1	b0
			0	0	0	0	0

Symbol	Address	After Reset
PUM	0084h	00h

Bit Symbol	Bit Name	Function	RW
— (b4-b0)	Reserved Bit	Set to “0”	RW
TZOPL	Timer Z Output Level Latch	0 : Outputs one-shot pulse “H” Outputs “L” when the timer is stopped 1 : Outputs one-shot pulse “L” Outputs “H” when the timer is stopped	RW
INOSTG	$\overline{\text{INT0}}$ Pin One-shot Trigger Control Bit(1)	0 : $\overline{\text{INT0}}$ pin one-shot trigger disabled 1 : $\overline{\text{INT0}}$ pin one-shot trigger enabled	RW
INOSEG	$\overline{\text{INT0}}$ Pin One-shot Trigger Polarity Select Bit(2)	0 : Falling edge trigger 1 : Rising edge trigger	RW

NOTES :

1. Set the INOSTG bit to “1” after the INT0EN bit in the INTEN register and the INOSEG bit in the PUM register are set. When setting the INOSTG bit to “1” ($\overline{\text{INT0}}$ pin one-shot trigger enabled), set the INT0F0 to INT0F1 bits in the INT0F register. Set the INOSTG bit to “0” ($\overline{\text{INT0}}$ pin one-shot trigger disabled) after the TZS bit in the TZMR register is set to “0” (count stop).
2. The INOSEG bit is enabled only when the INT0PL bit in the INTEN register is set to “0” (one edge).

Figure 13.21 TZMR and PUM Registers in Programmable Wait One-Shot Generation Mode

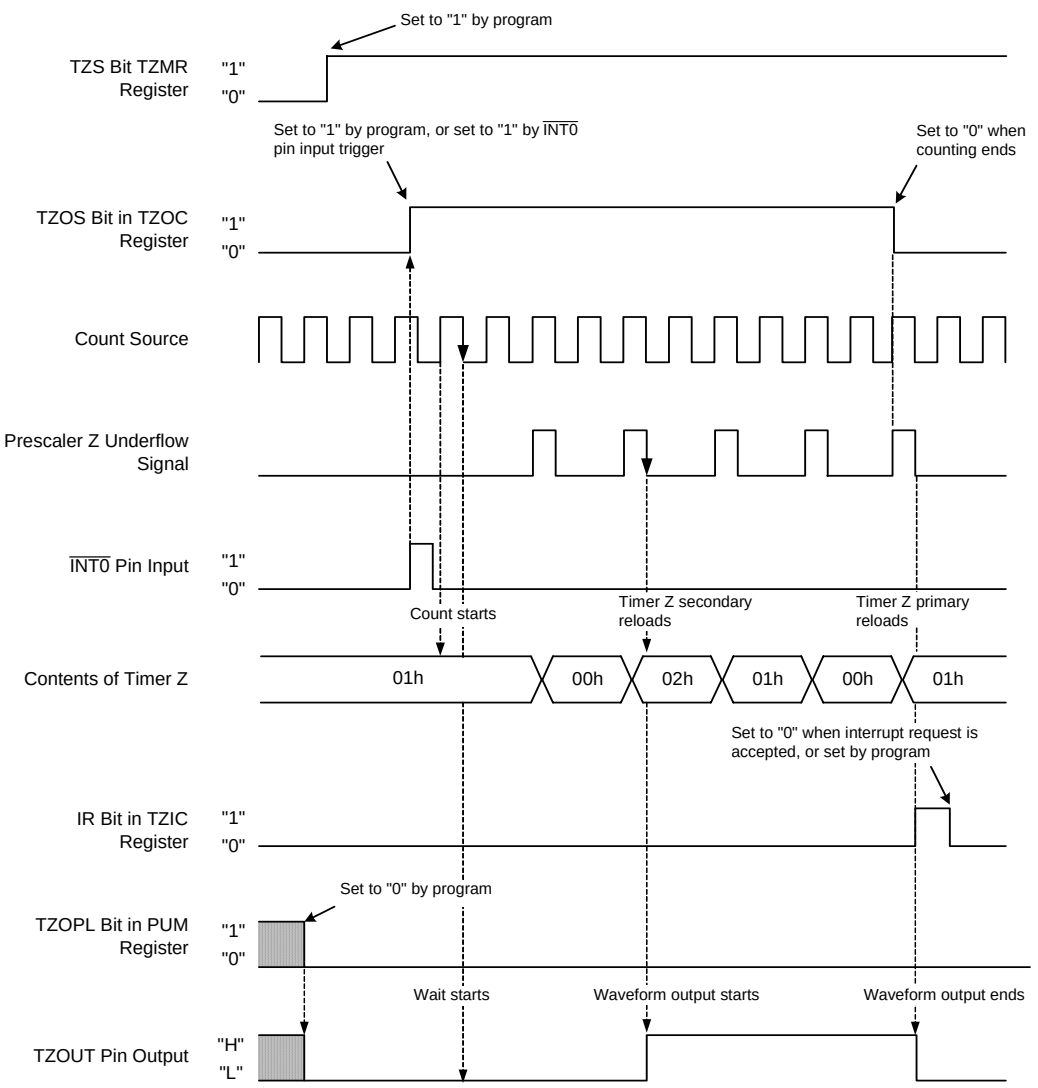

The above applies to the following conditions.
PREZ=01h, TZPR=01h, TZSC=02h
PUM register TZOPL bit=0, INOSTG bit=1 (INT0 one-shot trigger enabled)
INOSEG bit= 1 (rising edge trigger)

Figure 13.22 Operating Example in Programmable Wait One-Shot Generation Mode

13.3 Timer C

Timer C is a 16-bit timer. Figure 13.23 shows the Block Diagram of Timer C. Figure 13.24 shows the Block Diagram of CMP Waveform Generation Unit. Figure 13.25 shows the Block Diagram of CMP Waveform Output Unit.

Timer C has two modes: input capture mode and output compare mode. Figure 13.26 to 13.29 show the Timer C-associated registers.

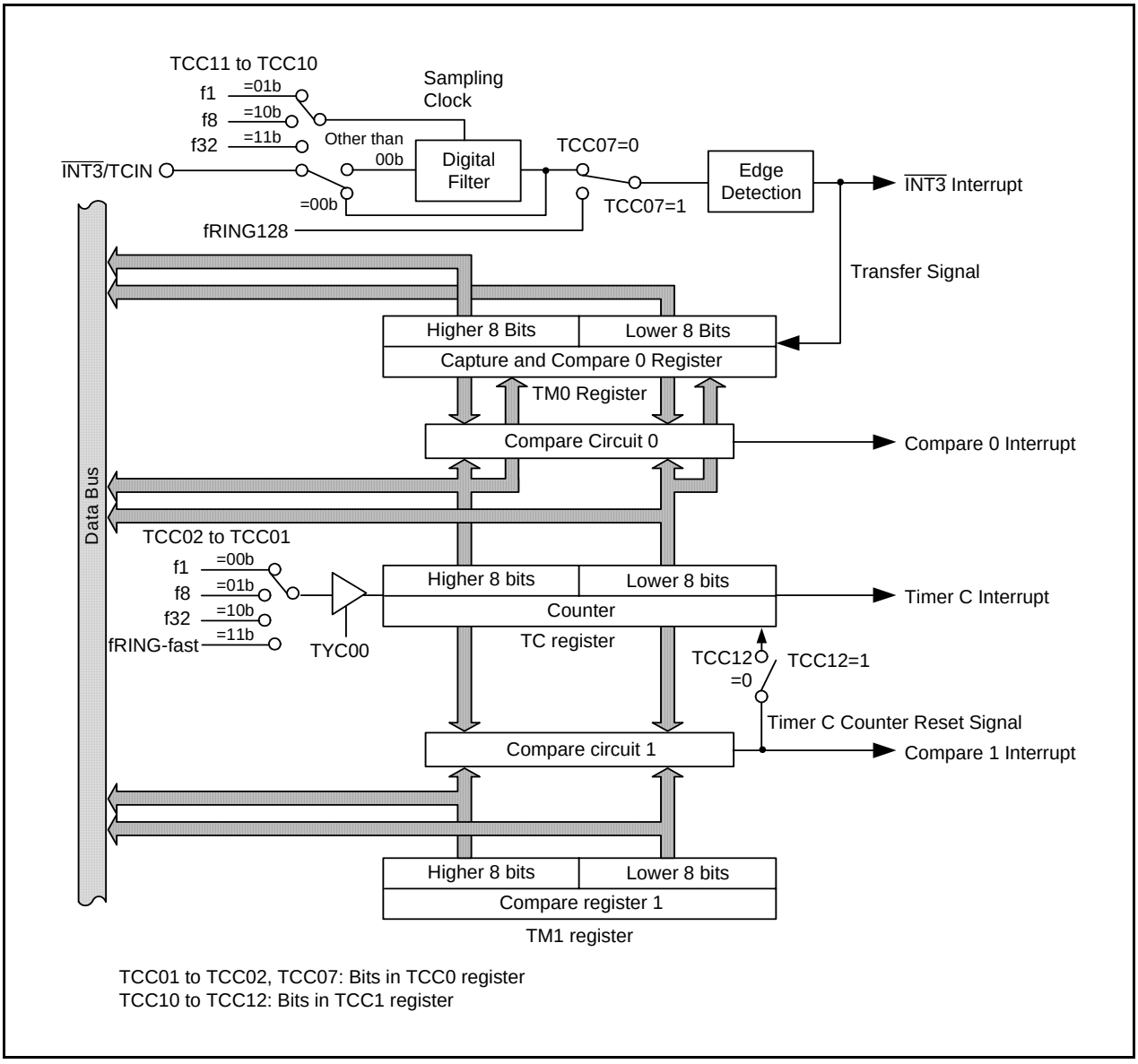

Figure 13.23 Block Diagram of Timer C

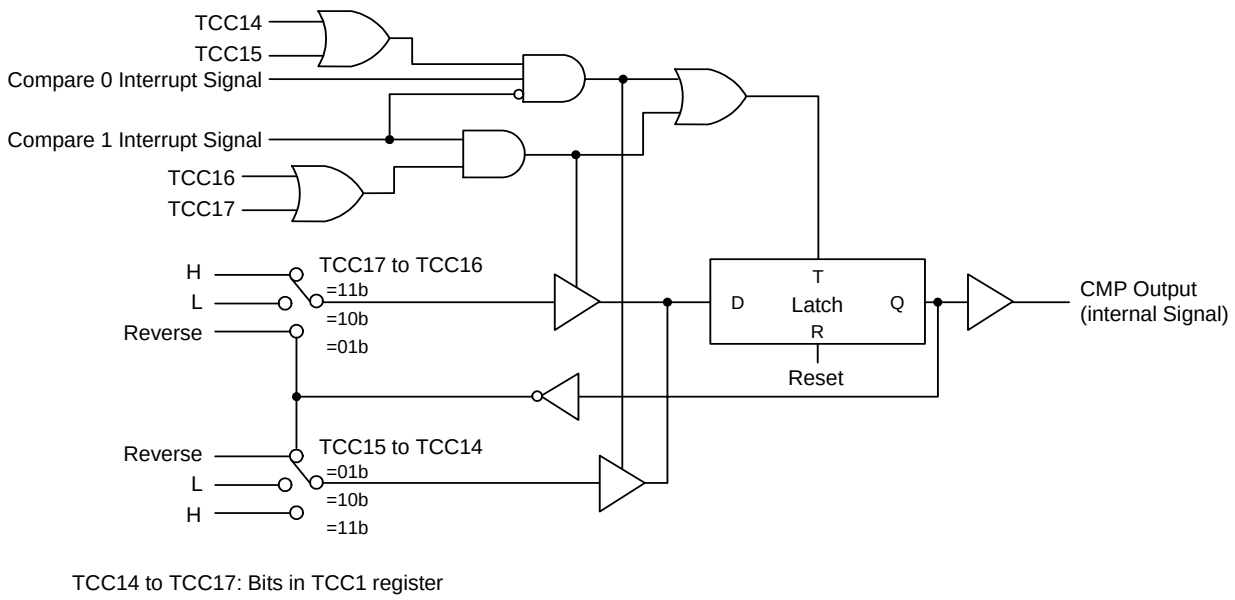

Figure 13.24 Block Diagram of CMP Waveform Generation Unit

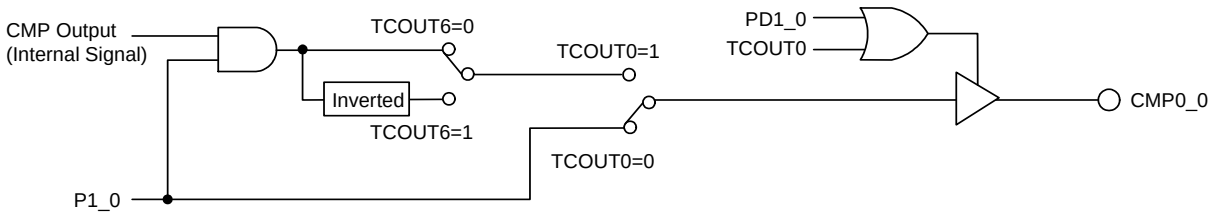

Register	TCOUT	P1	TCOUT	CMP0_0 Output
Bit	TCOUT0	P1_0	TCOUT6	
Setting Value	1	1	0	CMP0_0 waveform output
	1	1	1	CMP0_0 reversed waveform output
	1	0	0	“L” output
	1	0	1	“H” output

This diagram is a block diagram of the CMP0_0 waveform output unit.
The CMP0_1 to CMP0_2 and CMP1_0 to CMP1_2 waveform output units are the same configurations.

Figure 13.25 Block Diagram of CMP Waveform Output Unit

Timer C Register

(b15) b7 (b8) b0 b7 b0

Symbol	Address	After Reset
TC	0091h-0090h	0000h

Function	RW
Counts the internal count source. “0000h” can be read out by reading when the TCC00 bit is set to “0” (count stops). Count value can be read out by reading when the TCC00 bit is set to “1” (count starts).	RO

Capture and Compare 0 Register

(b15) b7 (b8) b0 b7 b0

Symbol	Address	After Reset
TM0	009Dh-009Ch	0000h(2)

Mode	Function	RW
Input Capture Mode	When the active edge of measurement pulse is input, store the value in the TC register	RO

Mode	Function	Setting Range	RW
Output compare Mode(1)	Store the value compared with Timer C	0000h to FFFFh	RW

NOTES :

1. When setting the value to the TM0 register, set the TCC13 bit in the TCC1 register to “1” (compare 0 output selected). When the TCC13 bit is set to “0” (capture selected), the value cannot be written.
2. When setting the TCC13 bit in the TCC1 register to “1”, the value after reset is “FFFFh”.

Compare 1 Register

(b15) b7 (b8) b0 b7 b0

Symbol	Address	After Reset
TM1	009Fh-009Eh	FFFFh

Mode	Function	Setting Range	RW
Output Compare Mode	Store the value compared with Timer C	0000h to FFFFh	RW

Figure 13.26 TC, TM0 and TM1 Registers

Timer C Control Register 0

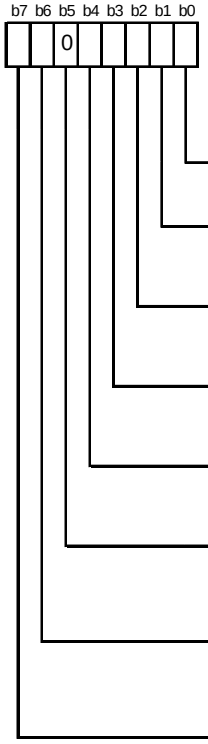

Symbol	Address	After Reset
TCC0	009Ah	00h

Bit Symbol	Bit Name	Function	RW
TCC00	Timer C Count Start Bit	0 : Stops counting 1 : Starts counting	RW
TCC01	Timer C Count Source Select Bit(1)	b2 b1 0 0 : f1 0 1 : f8 1 0 : f32 1 1 : fRING-fast	RW
TCC02			RW
TCC03	$\overline{\text{INT3}}$ Interrupt / Capture Polarity Select Bit(1, 2)	b4 b3 0 0 : Rising edge 0 1 : Falling edge 1 0 : Both edges 1 1 : Do not set	RW
TCC04			RW
— (b5)	Reserved Bit	Set to “0”	RW
TCC06	$\overline{\text{INT3}}$ Interrupt / Capture Input Bit(2, 3)	0 : $\overline{\text{INT3}}$ Interrupt is generated synchronizing with Timer C count source 1 : $\overline{\text{INT3}}$ Interrupt is generated when $\overline{\text{INT3}}$ interrupt is input(4)	RW
TCC07	$\overline{\text{INT3}}$ Interrupt / Capture Input Switch Bit(1, 2)	0 : $\overline{\text{INT3}}$ 1 : fRING128	RW

NOTES :

1. Change this bit when the TCC00 bit is set to “0” (count stop).
2. The IR bit in the INT3IC register may be set to “1” (requests interrupt) when the TCC03, TCC04, TCC06 and TCC07 bits are rewritten. Refer to **20.2.5 Changing Interrupt Factor.**
3. When the TCC13 bit is set to “1” (output compare mode) and $\overline{\text{INT3}}$ interrupt is input, regardless of the setting value of the TCC06 bit, an interrupt request is generated.
4. When using the $\overline{\text{INT3}}$ filter, the $\overline{\text{INT3}}$ interrupt is generated synchronizing with the clock for the digital filter.

Figure 13.27 TCC0 Register

Timer C Control Register 1

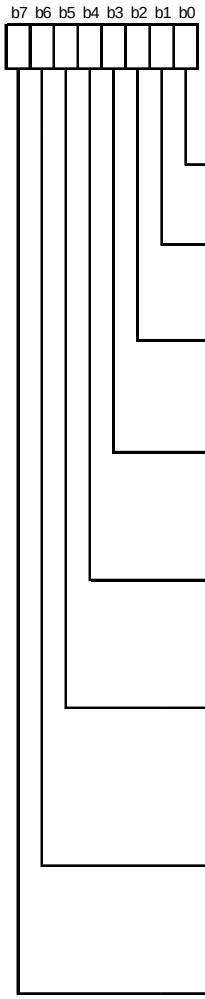

Symbol	Address	After Reset
TCC1	009Bh	00h

Bit Symbol	Bit Name	Function	RW
TCC10	$\overline{\text{INT3}}$ Filter Select Bit(1)	b1 b0 0 0 : No filter 0 1 : Filter with f1 sampling 1 0 : Filter with f8 sampling 1 1 : Filter with f32 sampling	RW
TCC11			RW
TCC12	Timer C Counter Reload Select Bit(3)	0 : No reload 1 : Set TC register to “0000h” when compare 1 is matched	RW
TCC13	Compare 0 / Capture Select Bit(2)	0 : Select capture (input capture mode)(3) 1 : Select compare 0 output (output compare mode)	RW
TCC14	Compare 0 Output Mode Select Bit(3)	b5 b4 0 0 : CMP output remains unchanged even when compare 0 matches 0 1 : CMP output is reversed when compare 0 signal matches 1 0 : CMP output is set to “L” when compare 0 signal matches 1 1 : CMP output is set to “H” when compare 0 signal matches	RW
TCC15			
TCC16	Compare 1 Output Mode Select Bit(3)	b7 b6 0 0 : CMP output remains unchanged even when compare 1 matches 0 1 : CMP output is reversed when compare 1 signal matches 1 0 : CMP output is set to “L” when compare 1 signal matches 1 1 : CMP output is set to “H” when compare 1 signal matches	RW
TCC17			

NOTES :

1. When the same value from the $\overline{\text{INT3}}$ pin is sampled three times continuously, the input is determined.
2. When the TCC00 bit in the TCC0 register is set to “0” (count stops), rewrite the TCC13 bit.
3. When the TCC13 bit is set to “0” (input capture mode), set the TCC12, TCC14 to TCC17 bits to “0”.

Figure 13.28 TCC1 Register

Timer C Output Control Register(1)

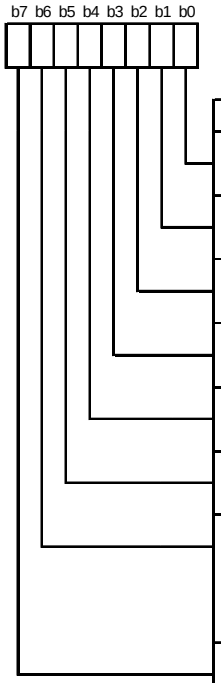

Symbol	Address	After Reset
TCOUT	00FFh	00h

Bit Symbol	Bit Name	Function	RW
TCOUT0	CMP Output Enable Bit 0	0 : Disables CMP output from CMP0_0 1 : Enables CMP output from CMP0_0	RW
TCOUT1	CMP Output Enable Bit 1	0 : Disables CMP output from CMP0_1 1 : Enables CMP output from CMP0_1	RW
TCOUT2	CMP Output Enable Bit 2	0 : Disables CMP output from CMP0_2 1 : Enables CMP output from CMP0_2	RW
TCOUT3	CMP Output Enable Bit 3	0 : Disables CMP output from CMP1_0 1 : Enables CMP output from CMP1_0	RW
TCOUT4	CMP Output Enable Bit 4	0 : Disables CMP output from CMP1_1 1 : Enables CMP output from CMP1_1	RW
TCOUT5	CMP Output Enable Bit 5	0 : Disables CMP output from CMP1_2 1 : Enables CMP output from CMP1_2	RW
TCOUT6	CMP Output Reverse Bit 0	0 : Not reverse CMP output from CMP0_0 to CMP0_2 1 : Reverses CMP output from CMP0_0 to CMP0_2	RW
TCOUT7	CMP Output Reverse Bit 1	0 : Not reverse CMP output from CMP1_0 to CMP1_2 1 : Reverses CMP output from CMP1_0 to CMP1_2	RW

NOTES :

1. Set the bits which are not used for the CMP output to “0”

Figure 13.29 TCOUT Register

13.3.1 Input Capture Mode

Input capture mode is mode to input an edge to the TCIN pin or the fRING128 clock as trigger to latch the timer value and generates an interrupt request. The TCIN input contains a digital filter and this prevents an error caused by noise or so on from occurring. Table 13.11 shows Specification of Input Capture Mode. Figure 13.30 shows an Operating Example in Input Capture Mode.

Table 13.11 Specification of Input Capture Mode

Item	Specification
Count Source	f1, f8, f32, fRING-fast
Count Operation	• Increment • Transfer the value in the TC register to the TM0 register at the active edge of measurement pulse • The value in the TC register is set to “0000h” when the count stops
Count Start Condition	The TCC00 bit in the TCC0 register is set to “1” (count starts)
Counter Stop Condition	The TCC00 bit in the TCC0 register is set to “0” (count stops)
Interrupt Request Generation Timing	• When the active edge of measurement pulse is input [$\overline{\text{INT3}}$ interrupt](1) • When Timer C overflows [Timer C interrupt]
$\overline{\text{INT3}}$/TCIN Pin Function	Programmable I/O port or measurement pulse input ($\overline{\text{INT3}}$ interrupt input)
P1_0 to P1_2, P3_3 to P3_5 Pin Function	Programmable I/O port
Counter Value Reset Timing	When the TCC00 bit in the TCC0 register is set to “0” (capture disabled)
Read from Timer(2)	• The count value can be read out by reading the TC register. • The count value at measurement pulse active edge input can be read out by reading the TM0 register
Write to Timer	Write to the TC and TM0 registers is disabled
Select Function	• $\overline{\text{INT3}}$/TCIN polarity select function The TCC03 to TCC04 bits can select the active edge of measurement pulse • Digital filter function The TCC11 to TCC10 bits can select the digital filter sampling frequency • Trigger select function The TCC07 bit can select the TCIN input or the fRING128

NOTES:
1. The digital filter delay and one count source (max.) delay are generated for the $\overline{\text{INT3}}$ interrupt.
2. Read the TC and TM0 registers in 16-bit unit.

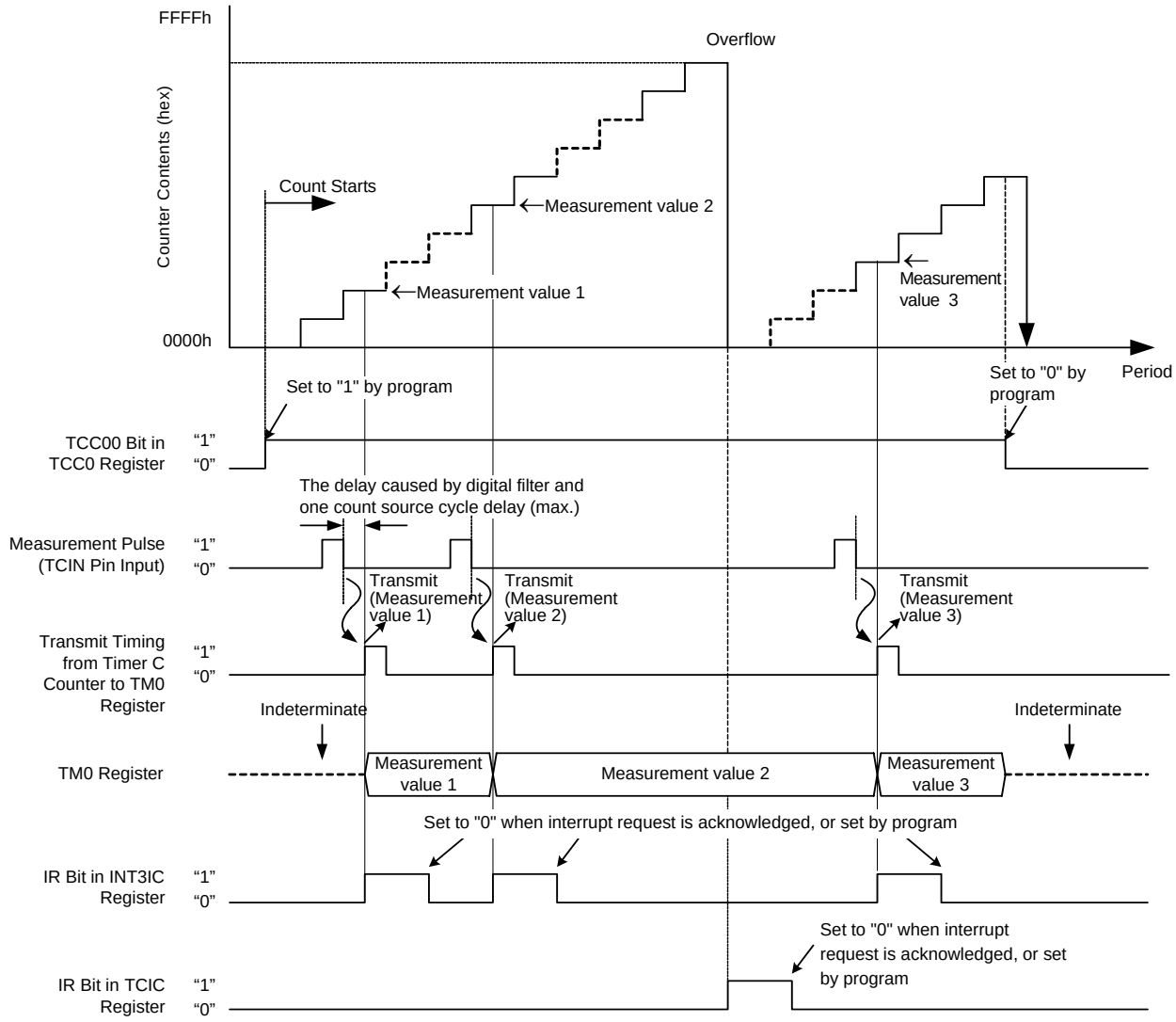

The above applies to the following conditions.
TCC0 register TCC04 to TCC03 bits=01b (capture input polarity is set for falling edge),
TCC07=0 ($\overline{\text{INT3}}$/TCIN input as capture input trigger)

Figure 13.30 Operating Example in Input Capture Mode

13.3.2 Output Compare Mode

Output compare mode is mode to generate an interrupt request when the value of the TC register matches the value of the TM0 or TM1 register. Table 13.12 shows Specification of Output Compare Mode. Figure 13.31 shows an Operating Example in Output Compare Mode.

Table 13.12 Specification of Output Compare Mode

Item	Specification
Count Source	f1, f8, f32, fRING-fast
Count Operation	• Increment • The value in the TC register is set to “0000h” when a count stops
Count Start Condition	The TCC00 bit in the TCC0 register is set to “1” (count starts)
Counter Stop Condition	The TCC00 bit in the TCC0 register is set to “0” (count stops)
Waveform Output Start Condition	The TCOUT0 to TCOUT5 bits in the TCOUT register is set to “1” (enables CMP output).(2)
Waveform Output Stop Condition	The TCOUT0 to TCOUT5 bits in the TCOUT register is set to “0” (disables CMP output).
Interrupt Request Generation Timing	• When a match occurs in the compare circuit 0 [compare 0 interrupt] • When a match occurs in the compare circuit 1 [compare 1 interrupt] • When Time C overflows [Timer C interrupt]
$\overline{\text{INT3}}$/TCIN Pin Function	Programmable I/O port or $\overline{\text{INT3}}$ interrupt input
P1_0 to P1_2 Pins and P3_0 to P3_2 Pins Function	Programmable I/O port or CMP output(1)
Counter Value Reset Timing	When the TCC00 bit in the TCC0 register is set to “0” (count stops)
Read from Timer(1)	• The value in the compare register can be read out by reading the TM0 and TM1 registers. • The count value can be read out by reading the TC register.
Write to Timer(1)	• Write to the TC register is disabled. • The values written to the TM0 and TM1 registers are stored in the compare register at the following timings: - When the TM0 and TM1 registers are written if the TCC00 bit is set to “0” (count stops) - When the counter overflows if the TCC00 bit is set to “1” (during counting) and the TCC12 bit in the TCC1 register is set to “0” (free-run) - When the compare 1 matches a counter if the TCC00 bit is set to “1” and the TCC12 bit is set to “1” (set the TC register to “0000h” when the compare 1 matches)
Select Function	• Timer C counter reload select function The TCC12 bit in the TCC1 register can select whether the counter value in the TC register is set to “0000h” when the compare circuit 1 matches or not. • The TCC14 to TCC15 bits in the TCC1 register can select the output level when the compare circuit 0 matches. The TCC16 to TCC17 bits in the TCC1 register can select the output level when the compare circuit 1 matches. • The TCOUT6 to TCOUT7 bits in the TCOUT register can select whether the output is reversed or not.

NOTES:

1. When the corresponding port data is “1”, the waveform is output depending on the setting of the registers TCC1 and TCOUT. When the corresponding port data is “0”, the fixed level is output (refer to **Figure 13.25 Block Diagram of CMP Waveform Output Unit**).
2. Access the TC, TM0, and TM1 registers in 16-bit units.

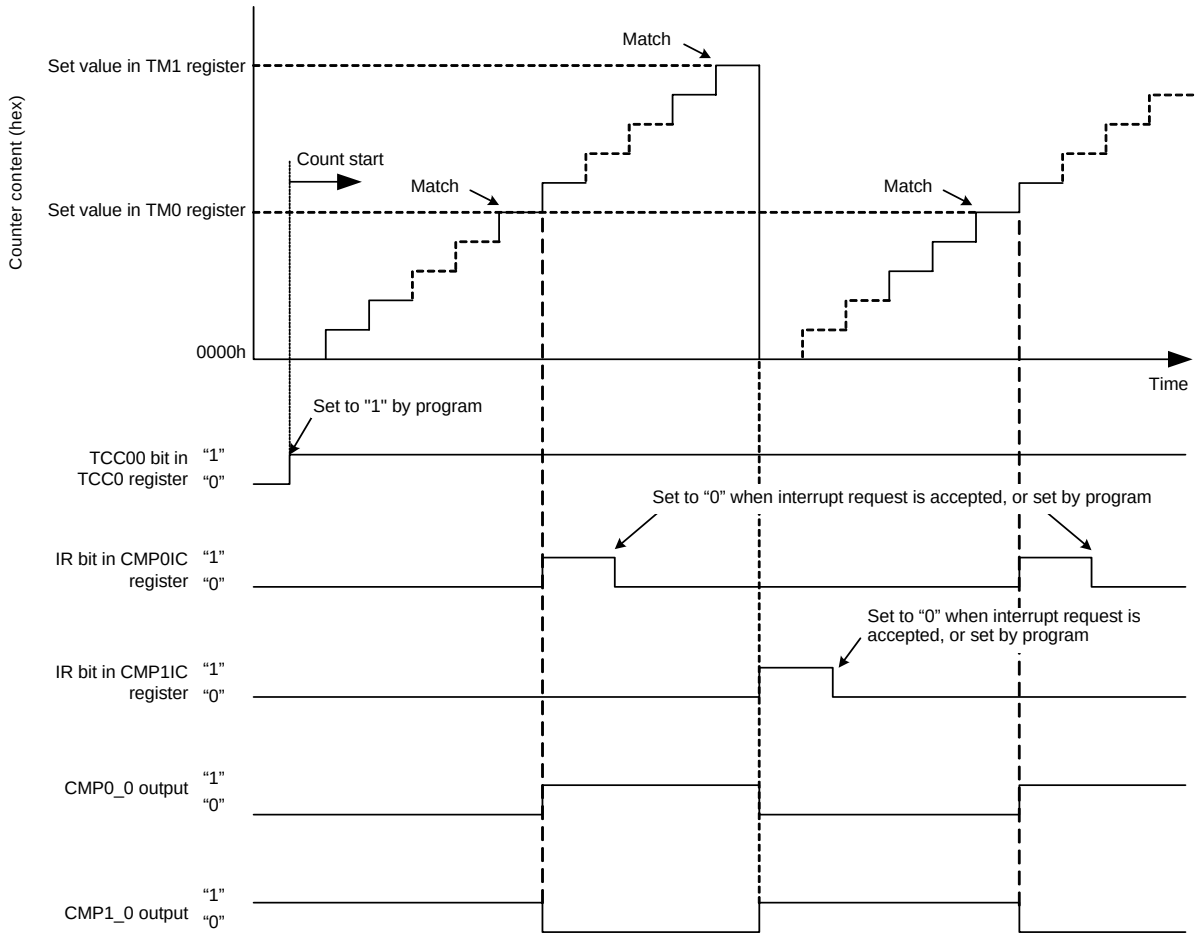

Conditions :

TCC12 bit in TCC1 register = 1 (TC register is set to "0000h" at Compare 1 match occurrence)
TCC13 bit in TCC1 register = 1 (Compare 0 output selected)
TCC15 to TCC14 bits in TCC1 register = 11b (CMP output level is set to high at Compare 0 match occurrence)
TCC17 to TCC16 bits in TCC1 register = 10b (CMP output level is set to low at Compare 1 match occurrence)
TCOUT6 bit in TCOUT register = 0 (not reversed)
TCOUT7 bit in TCOUT register = 1 (reversed)
TCOUT0 bit in TCOUT register = 1 (CMP0_0 output enabled)
TCOUT3 bit in TCOUT register = 1 (CMP1_0 output enabled)
P1_0 bit in P1 register = 1 (high)
P3_0 bit in P3 register = 1 (high)

Figure 13.31 Operating Example in Output Compare Mode

14. Serial Interface

Serial Interface is configured with one channels: UART0. UART0 has an exclusive timer to generate a transfer clock.
Figure 14.1 shows a UART0 Block Diagram. Figure 14.2 shows a UART0 Transmit/Receive Unit.
UART0 has two modes: clock synchronous serial I/O mode, and clock asynchronous serial I/O mode (UART mode).
Figure 14.3 to 14.5 show the UART0-associated registers.

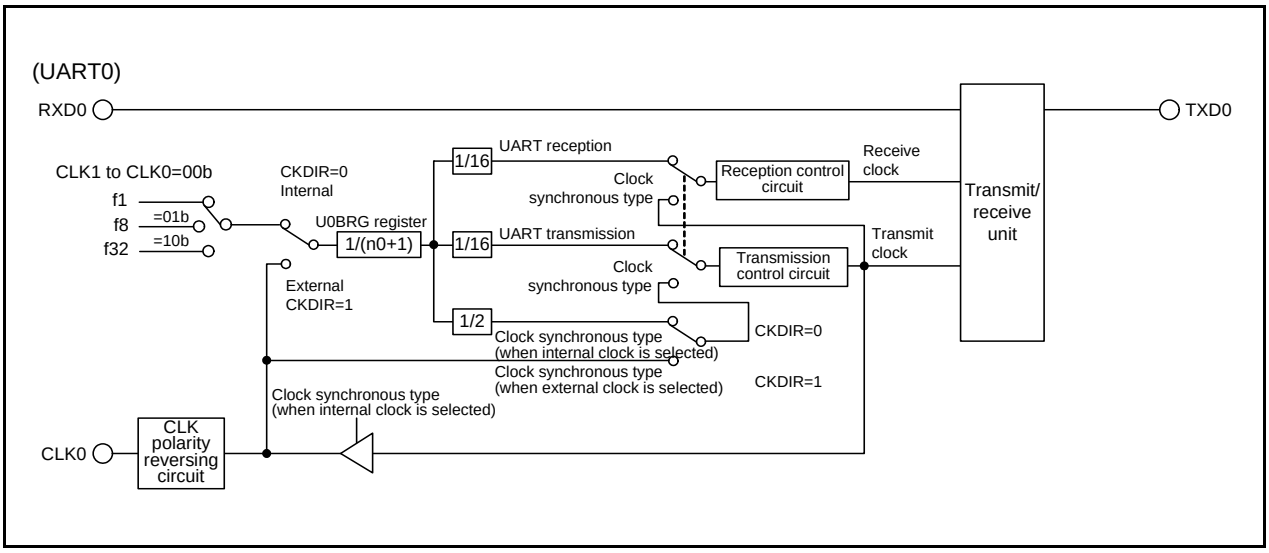

Figure 14.1 UART0 Block Diagram

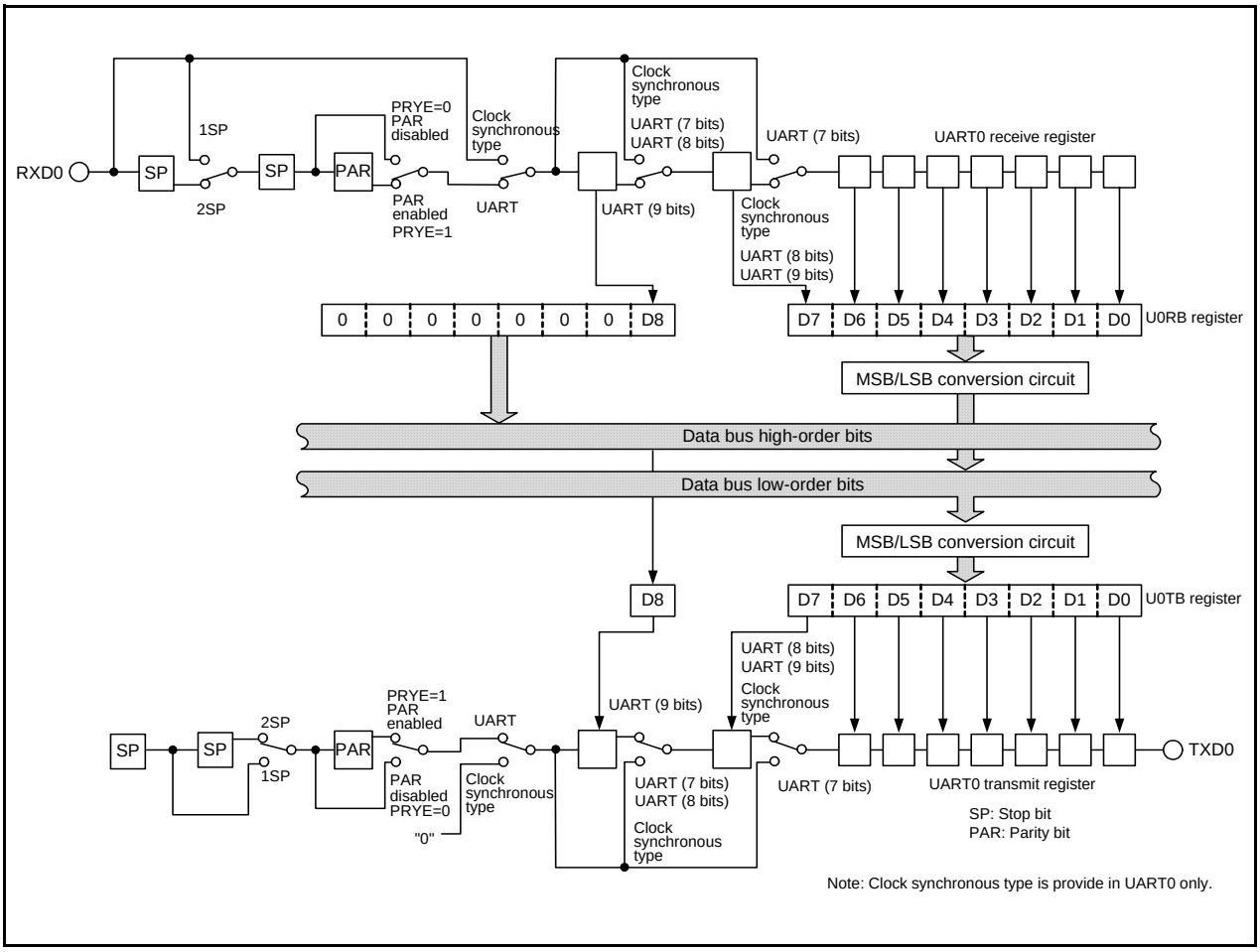

Figure 14.2 UART0 Transmit/Receive Unit

UART0 Transmit Buffer Register[1, 2]

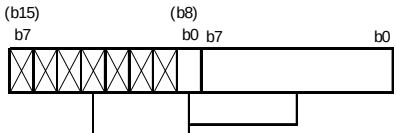

Symbol	Address	After Reset
U0TB	00A3h-00A2h	Indeterminate

	Function	RW
— (b8-b0)	Transmit data	WO
— (b15-b9)	Nothing is assigned. When write, set to "0". When read, its content is indeterminate.	—

NOTES :
1. When the transfer data length is 9-bit long, write to high-byte data first then low-byte data.
2. Use the MOV instruction to write to this register.

UART0 Receive Buffer Register[1]

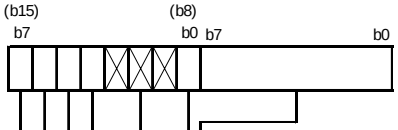

Symbol	Address	After Reset
U0RB	00A7h-00A6h	Indeterminate

Bit Symbol	Bit Name	Function	RW
— (b7-b0)	—	Receive data (D7 to D0)	RO
— (b8)	—	Receive data (D8)	RO
— (b11-b9)	Nothing is assigned. When write, set to "0". When read, its content is indeterminate.		—
OER	Overrun Error Flag[2]	0 : No overrun error 1 : Overrun error	RO
FER	Framing Error Flag[2]	0 : No framing error 1 : Framing error	RO
PER	Parity Error Flag[2]	0 : No parity error 1 : Parity error	RO
SUM	Error Sum Flag[2]	0 : No error 1 : Error	RO

NOTES :
1. Read out the UiRB register in 16-bit unit.
2. The SUM, PER, FER and OER bits are set to "0" (no error) when the SMD2 to SMD0 bits in the UiMR register are set to "000b" (serial interface disabled) or the RE bit in the U0C1 register is set to "0" (receive disable). The SUM bit is set to "0" (no error) when the PER, FER and OER bits are set to "0" (no error).
   The PER and FER bits are set to "0" even when the higher byte of the U0RB register is read out.

UART0 Bit Rate Register[1, 2, 3]

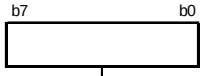

Symbol	Address	After Reset
U0BRG	00A1h	Indeterminate

Function	Setting Range	RW
Assuming that set value is n, U0BRG divides the count source by n+1	00h to FFh	WO

NOTES :
1. Write to this register while the serial I/O is neither transmitting nor receiving.
2. Use the MOV instruction to write to this register.
3. After setting the CLK0 to CLK1 bits of the U0C0 register, write to the U0BRG register.

Figure 14.3 U0TB, U0RB and U0BRG Registers

UART0 Transmit / Receive Mode Register

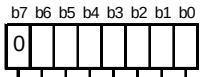

Symbol	Address	After Reset
U0MR	00A0h	00h

Bit Symbol	Bit Name	Function	RW
SMD0	Serial Interface Mode Select Bit	b2 b1 b0 0 0 0 : Serial interface disabled 0 0 1 : Clock synchronous serial I/O mode 1 0 0 : UART mode transfer data 7 bits long 1 0 1 : UART mode transfer data 8 bits long 1 1 0 : UART mode transfer data 9 bits long Other than above : Do not set	RW
SMD1			RW
SMD2			RW
CKDIR	Internal / External Clock Select Bit	0 : Internal clock 1 : External clock(1)	RW
STPS	Stop Bit Length Select Bit	0 : 1 Stop Bit 1 : 2 Stop Bits	RW
PRY	Odd / Even Parity Select Bit	Enables when PRYE = 1 0 : Odd parity 1 : Even parity	RW
PRYE	Parity Enable Bit	0 : Parity disabled 1 : Parity enabled	RW
— (b7)	Reserved Bit	Set to "0"	RW

NOTES :

1. Set the PD1_6 bit in the PD1 register to "0" (input).

UART0 Transmit / Receive Control Register 0

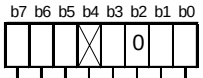

Symbol	Address	After Reset
U0C0	00A4h	08h

Bit Symbol	Bit Name	Function	RW
CLK0	BRG Count Source Select Bit(1)	b1 b0 0 0 : Selects f1 0 1 : Selects f8 1 0 : Selects f32 1 1 : Do not set	RW
CLK1			RW
— (b2)	Reserved Bit	Set to "0"	RW
TXEPT	Transmit Register Empty Flag	0 : Data in transmit register (during transmit) 1 : No data in transmit register (transmit completed)	RO
— (b4)	Nothing is assigned. When write, set to "0". When read, its content is "0".		—
NCH	Data Output Select Bit	0 : TXD0 pin is a pin of CMOS output 1 : TXD0 pin is a pin of N-channel open drain output	RW
CKPOL	CLK Polarity Select Bit	0 : Transmit data is output at falling edge of transfer clock and receive data is input at rising edge 1 : Transmit data is output at rising edge of transfer clock and receive data is input at falling edge	RW
UFORM	Transfer Format Select Bit	0 : LSB first 1 : MSB first	RW

NOTES :

1. If the BRG count source is switched, set the U0BRG register again.

Figure 14.4 U0MR and U0C0 Registers

UART0 Transmit / Receive Control Register 1

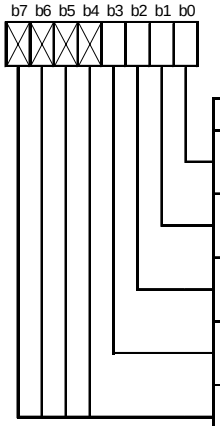

Symbol	Address	After Reset
U0C1	00A5h	02h

Bit Symbol	Bit Name	Function	RW
TE	Transmit Enable Bit	0 : Disables transmit 1 : Enables transmit	RW
TI	Transmit Buffer Empty Flag	0 : Data in U0TB register 1 : No data in U0TB register	RO
RE	Receive Enable Bit	0 : Disables receive 1 : Enables receive	RW
RI	Receive Complete Flag(1)	0 : No data in U0RB register 1 : Data in U0RB register	RO
— (b7-b4)	Nothing is assigned. When write, set to “0”. When read, its content is “0”.		—

NOTES :

1. The RI bit is set to “0” when the higher byte of the U0RB register is read out.

UART Transmit / Receive Control Register 2

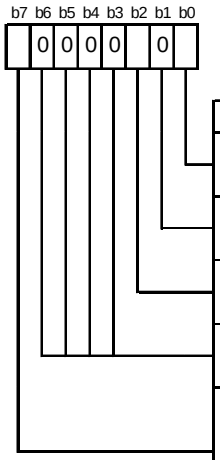

Symbol	Address	After Reset
UCON	00B0h	00h

Bit Symbol	Bit Name	Function	RW
U0IRS	UART0 Transmit Interrupt Cause Select Bit	0 : Transmit buffer empty (TI=1) 1 : Transmit completed (TXEPT=1)	RW
— (b1)	Reserved Bit	Set to “0”	RW
U0RRM	UART0 Continuous Receive Mode Enable Bit	0 : Disables continuous receive mode 1 : Enables continuous receive mode	RW
— (b6-b3)	Reserved Bit	Set to “0”	RW
CNTRSEL	CNTR0 Signal Pin Select Bit(1)	0 : P1_5/RXD0 P1_7/CNTR00/$\overline{\text{INT10}}$ 1 : P1_5/RXD0/CNTR01/$\overline{\text{INT11}}$ P1_7	RW

NOTES :

1. The CNTRSEL bit selects the input pin of CNTR0 ($\overline{\text{INTI}}$) signal.
   When the CNTR0 signal is output, it is output from the CNTR00 pin despite the CNTRSEL bit setting.

Figure 14.5 U0C1 and UCON Registers

14.1 Clock Synchronous Serial I/O Mode

The clock synchronous serial I/O mode is mode to transmit and receive data using a transfer clock. Table 14.1 lists the Specification of Clock Synchronous Serial I/O Mode. Table 14.2 lists the Registers to Be Used and Settings in Clock Synchronous Serial I/O Mode(1).

Table 14.1 Specification of Clock Synchronous Serial I/O Mode

Item	Specification
Transfer Data Format	• Transfer data length: 8 bits
Transfer Clock	• CKDIR bit in U0MR register is set to “0” (internal clock): fi/(2(n+1)) fi=f1, f8, f32 n=setting value in U0BRG register: 00h to FFh • The CKDIR bit is set to “1” (external clock): input from CLK0 pin
Transmit Start Condition	• Before transmit starts, the following requirements are required(1) - The TE bit in the U0C1 register is set to “1” (transmit enabled) - The TI bit in the U0C1 register is set to “0” (data in the U0TB register)
Receive Start Condition	• Before receive starts, the following requirements are required(1) - The RE bit in the U0C1 register is set to “1” (receive enabled) - The TE bit in the U0C1 register is set to “1” (transmit enabled) - The TI bit in the U0C1 register is set to “0” (data in the U0TB register)
Interrupt Request Generation Timing	• When transmit, one of the following conditions can be selected - The U0IRS bit is set to “0” (transmit buffer empty): when transferring data from the U0TB register to UART0 transmit register (when transmit starts) - The U0IRS bit is set to “1” (transmit completes): when completing transmit data from UARTi transmit register • When receive When transferring data from the UART0 receive register to the U0RB register (when receive completes)
Error Detection	• Overrun error(2) This error occurs if serial interface starts receiving the following data before reading the U0RB register and receives the 7th bit of the following data
Select Function	• CLK polarity selection Transfer data input/output can be selected to occur synchronously with the rising or the falling edge of the transfer clock • LSB first, MSB first selection Whether transmitting or receiving data beginning with the bit 0 or beginning with the bit 7 can be selected • Continuous receive mode selection Receive is enabled immediately by reading the U0RB register

NOTES:

1. When an external clock is selected, meet the conditions while the CKPOL bit in the U0C0 register is set to “0” (transmit data output at the falling edge and the receive data input at the rising edge of the transfer clock), the external clock is held “H”; if the CKPOL bit in the U0C0 register is set to “1” (transmit data output at the rising edge and the receive data input at the falling edge of the transfer clock), the external clock is held “L”.
2. If an overrun error occurs, the value of the U0RB register will be indeterminate. The IR bit in the S0RIC register remains unchanged.

Table 14.2 Registers to Be Used and Settings in Clock Synchronous Serial I/O Mode(1)

Register	Bit	Function
U0TB	0 to 7	Set transmit data
U0RB	0 to 7	Receive data can be read
	OER	Overrun error flag
U0BRG	0 to 7	Set bit rate
U0MR	SMD2 to SMD0	Set to “001b”
	CKDIR	Select the internal clock or external clock
U0C0	CLK1 to CLK0	Select the count source in the U0BRG register
	TXEPT	Transmit register empty flag
	NCH	Select TXD0 pin output mode
	CKPOL	Select the transfer clock polarity
	UFORM	Select the LSB first or MSB first
U0C1	TE	Set this bit to “1” to enable transmit/receive
	TI	Transmit buffer empty flag
	RE	Set this bit to “1” to enable reception
	RI	Reception complete flag
UCON	U0IRS	Select the factor of UART0 transmit interrupt
	U0RRM	Set this bit to “1” to use continuous receive mode
	CNTRSEL	Set this bit to “1” to select P1_5/RXD0/CNTR01/$\overline{\text{INT11}}$

NOTES:
1. Set bits which are not in this table to “0” when writing to the registers in clock synchronous serial I/O mode.

Table 14.3 lists the I/O Pin Functions in Clock Synchronous Serial I/O Mode. The TXD0 pin outputs “H” level between the operating mode selection of UART0 and transfer start, an “H” (If the NCH bit is set to “1” (the N-channel open-drain output), this pin is in a high-impedance state.)

Table 14.3 I/O Pin Functions in Clock Synchronous Serial I/O Mode

Pin Name	Function	Selection Method
TXD0(P1_4)	Output serial data	(Outputs dummy data when performing receive only)
RXD0(P1_5)	Input serial data	PD1_5 bit in PD1 register=0 (P1_5 can be used as an input port when performing transmit only)
CLK0(P1_6)	Output transfer clock	CKDIR bit in U0MR register=0
	Input transfer clock	CKDIR bit in U0MR register=1 PD1_6 bit in PD1 register=0

• Example of Transmit Timing (when internal clock is selected)

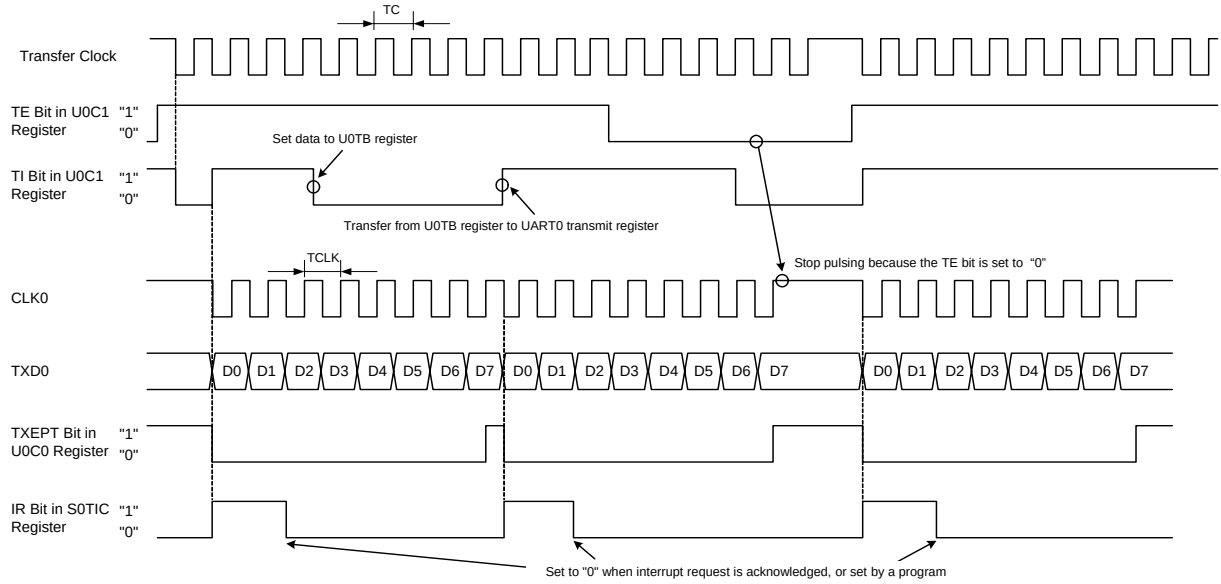

TC=TCLK=2(n+1)/fi
fi: frequency of U0BRG count source (f1, f8, f32)
n: setting value to U0BRG register

The above applies to the following settings:
- CKDIR bit in U0MR register = 0 (internal clock)
- CKPOL bit in U0C0 register = 0 (output transmit data at the falling edge and input receive data at the rising edge of the transfer clock)
- U0IRS bit in UCON register = 0 (an interrupt request is generated when the transmit buffer is empty):

• Example of Receive Timing (when external clock is selected)

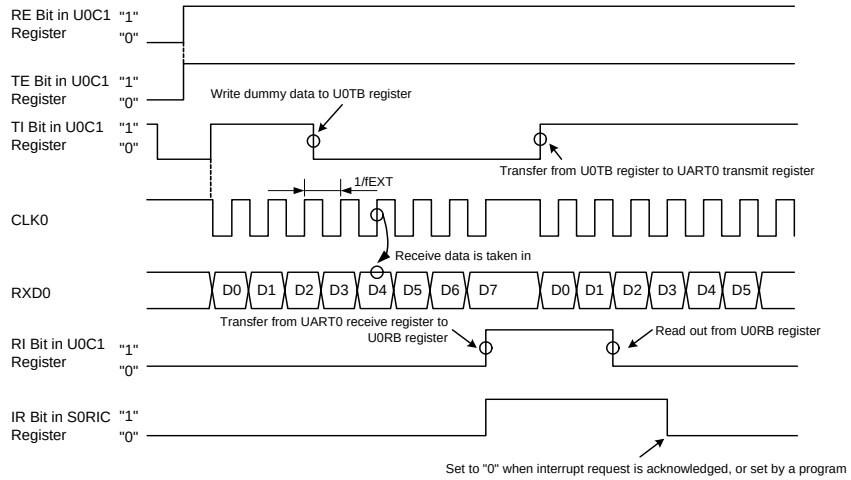

The above applies to the following settings:
- CKDIR bit in U0MR register = 1 (external clock)
- CKPOL bit in U0C0 register = 0 (output transmit data at the falling edge and input receive data at the rising edge of the transfer clock)

Meet the following conditions when "H" is applied to the CLK0 pin before receiving data:
- TE bit in U0C1 register = 1 (enables transmit)
- RE bit in U0C1 register = 1 (enables receive)
- Write dummy data to the U0TB register

fEXT: frequency of external clock

Figure 14.6 Transmit and Receive Operation

14.1.1 Polarity Select Function

Figure 14.7 shows the Transfer Clock Polarity. Use the CKPOL bit in the U0C0 register to select the transfer clock polarity.

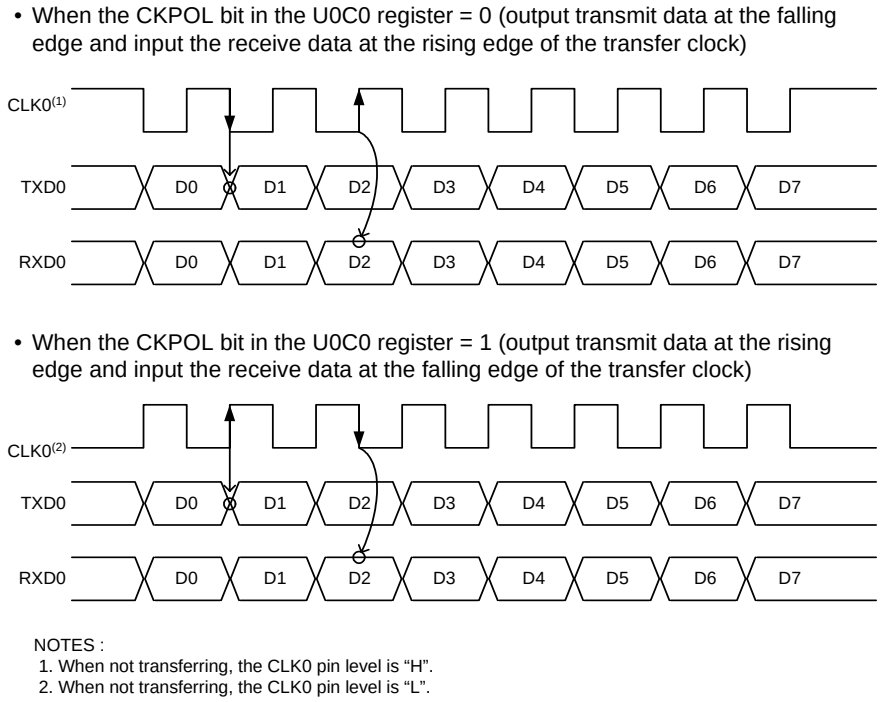

Figure 14.7 Transfer Clock Polarity

14.1.2 LSB First/MSB First Select Function

Figure 14.8 shows the Transfer Format. Use the UFORM bit in the U0C0 register to select the transfer format.

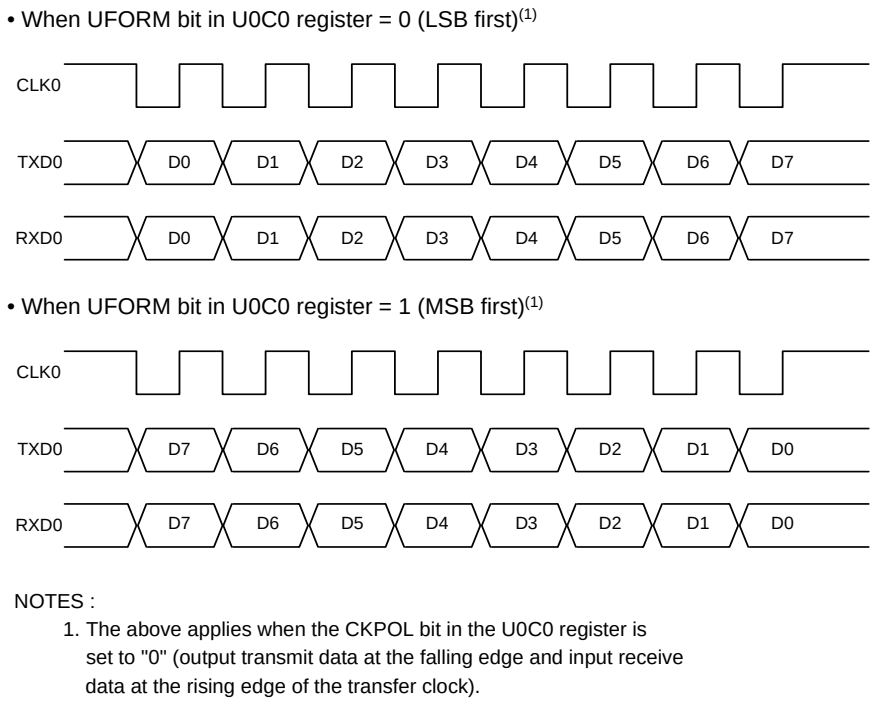

Figure 14.8 Transfer Format

14.1.3 Continuous Receive Mode

Continuous receive mode is held by setting the U0RRM bit in the UCON register to “1” (enables continuous receive mode). In this mode, reading U0RB register sets the TI bit in the U0C1 register to “0” (data in the U0TB register). When the U0RRM bit is set to “1”, do not write dummy data to the U0TB register in a program.

14.2 Clock Asynchronous Serial I/O (UART) Mode

The UART mode allows transmit and receive data after setting the desired bit rate and transfer data format. Table 14.4 lists the Specification of UART Mode. Table 14.5 lists the Registers to Be Used and Settings in UART Mode.

Table 14.4 Specification of UART Mode

Item	Specification
Transfer Data Format	• Character bit (transfer data): selectable from 7, 8 or 9 bits • Start bit: 1 bit • Parity bit: selectable from odd, even, or none • Stop bit: selectable from 1 or 2 bits
Transfer Clock	• CKDIR bit in U0MR register is set to “0” (internal clock) : fj/(16(n+1)) fj=f1, f8, f32 n=setting value in U0BRG register: 00h to FFh • CKDIR bit is set to “1” (external clock) : fEXT/(16(n+1)) fEXT: input from CLK0 pin n=setting value in U0BRG register: 00h to FFh
Transmit Start Condition	• Before transmit starts, the following are required - TE bit in U0C1 register is set to “1” (transmit enabled) - TI bit in U0C1 register is set to “0” (data in U0TB register)
Receive Start Condition	• Before receive starts, the following are required - RE bit in U0C1 register is set to “1” (receive enabled) - Detects start bit
Interrupt Request Generation Timing	• When transmitting, one of the following conditions can be selected - U0IRS bit is set to “0” (transmit buffer empty): when transferring data from the U0TB register to UART0 transmit register (when transmit starts) - U0IRS bit is set to “1” (transfer ends): when serial interface completes transmitting data from the UART0 transmit register • When receiving When transferring data from the UART0 receive register to U0RB register (when receive ends)
Error Detection	• Overrun error(1) This error occurs if serial interface starts receiving the following data before reading the U0RB register and receiving the bit one before the last stop bit of the following data • Framing error This error occurs when the number of stop bits set are not detected • Parity error This error occurs when parity is enabled, the number of 1’s in parity and character bits do not match the number of 1’s set • Error sum flag This flag is set is set to “1” when any of the overrun, framing, and parity errors is generated

NOTES:

1. If an overrun error occurs, the value in the U0RB register will be indeterminate. The IR bit in the S0RIC register remains unchanged.

Table 14.5 Registers to Be Used and Settings in UART Mode

Register	Bit	Function
U0TB	0 to 8	Set transmit data(1)
U0RB	0 to 8	Receive data can be read(1)
	OER,FER,PER,SUM	Error flag
U0BRG	0 to 7	Set a bit rate
U0MR	SMD2 to SMD0	Set to “100b” when transfer data is 7-bit long Set to “101b” when transfer data is 8-bit long Set to “110b” when transfer data is 9-bit long
	CKDIR	Select the internal clock or external clock
	STPS	Select the stop bit
	PRY, PRYE	Select whether parity is included and odd or even
U0C0	CLK0, CLK1	Select the count source for the U0BRG register
	TXEPT	Transmit register empty flag
	NCH	Select TXD0 pin output mode
	CKPOL	Set to “0”
	UFORM	LSB first or MSB first can be selected when transfer data is 8-bit long. Set to “0” when transfer data is 7- or 9-bit long.
U0C1	TE	Set to “1” to enable transmit
	TI	Transmit buffer empty flag
	RE	Set to “1” to enable receive
	RI	Receive complete flag
UCON	U0IRS, U1IRS	Select the factor of UART0 transmit interrupt
	U0RRM	Set to “0”
	CNTRSEL	Set to “1” to select P1_5/RXD0/CNTR01/$\overline{\text{INT11}}$

NOTES:
1. The bits used for transmit/receive data are as follows: Bits 0 to 6 when transfer data is 7-bit long; bits 0 to 7 when transfer data is 8-bit long; bits 0 to 8 when transfer data is 9-bit long.

Table 14.6 lists the I/O Pin Functions in Clock Asynchronous Serial I/O Mode. After the UART0 operating mode is selected, the TXD0 pin outputs “H” level (If the NCH bit is set to “1” (N-channel open-drain outputs), this pin is in a high-impedance state) until transfer starts.

Table 14.6 I/O Pin Functions in Clock Asynchronous Serial I/O Mode

Pin name	Function	Selection Method
TXD0(P1_4)	Output serial data	(Cannot be used as a port when performing receive only)
RXD0(P1_5)	Input serial data	PD1_5 bit in PD1 register=0 (P1_5 can be used as an input port when performing transmit only)
CLK0(P1_6)	Programmable I/O Port	CKDIR bit in U0MR register=0
	Input transfer clock	CKDIR bit in U0MR register=1 PD1_6 bit in PD1 register=0

• Transmit Timing When Transfer Data is 8-Bit Long (parity enabled, 1 stop bit)

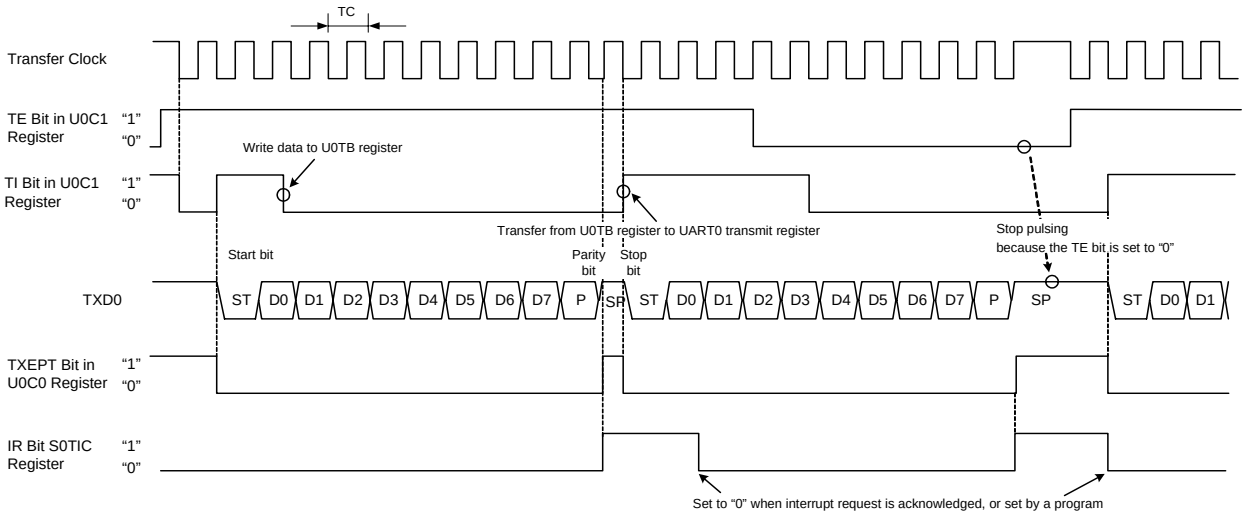

The above timing diagram applies to the following conditions:
- PRYE bit in U0MR register = 1 (parity enabled)
- STPS bit in U0MR register = 0 (1 stop bit)
- U0IRS bit in UCON register = 1 (an interrupt request is generated when transmit completes)

TC=16 (n + 1) / fj or 16 (n + 1) / fEXT
fj: Frequency of U0BRG count source (f1, f8, f32)
fEXT: Frequency of U0BRG count source (external clock)
n: Setting value to U0BRG register

• Transmit Timing When Transfer Data is 9-Bit Long (parity disabled, 2 stop bits)

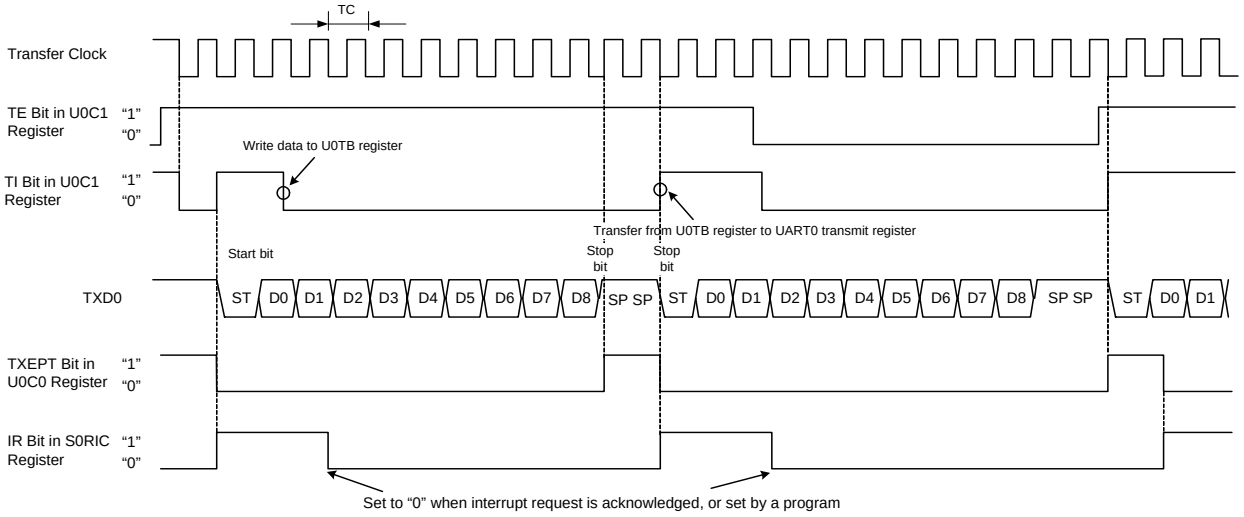

The above timing diagram applies to the following conditions:
- PRYE bit in U0MR register = 0 (parity disabled)
- STPS bit in U0MR register = 1 (2 stop bits)
- U0IRS bit in UCON register = 0 (an interrupt request is generated when transmit buffer is empty)

TC=16 (n + 1) / fj or 16 (n + 1) / fEXT
fj: Frequency of U0BRG count source (f1, f8, f32)
fEXT: Frequency of U0BRG count source (external clock)
n: Setting value to U0BRG register

Figure 14.9 Transmit Timing in UART Mode

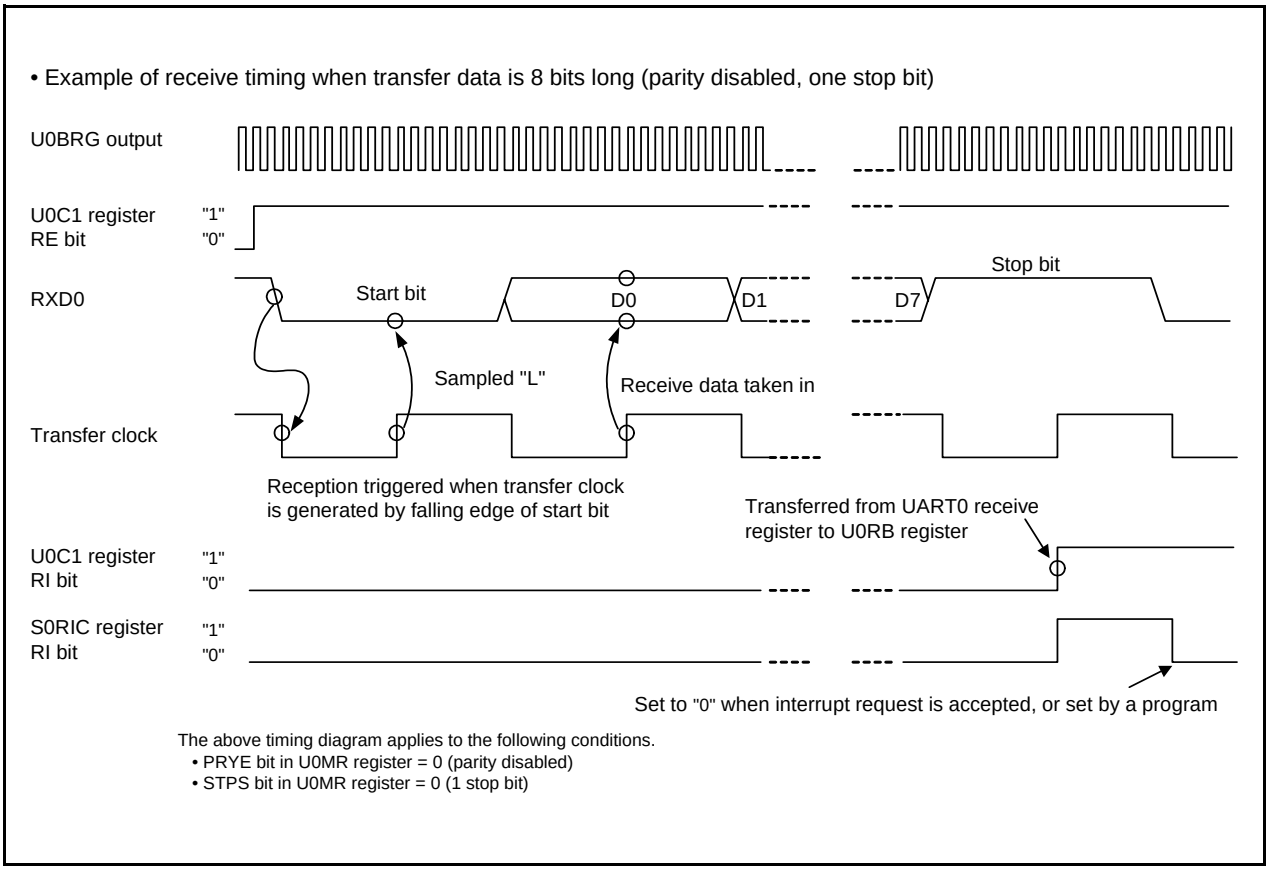

Figure 14.10 Receive Timing in UART Mode

14.2.1 CNTR0 Pin Select Function

The CNTRSEL bit in the UCON register selects whether P1_7 can be used as the CNTR00/$\overline{\text{INT10}}$ input pin or P1_5 can be used as the CNTR01/$\overline{\text{INT11}}$ input pin.

When the CNTRSEL bit is set to “0”, P1_7 is used as the CNTR00/$\overline{\text{INT10}}$ pin and when the CNTRSEL bit is set to “1”, P1_5 is used as the CNTR01/$\overline{\text{INT11}}$ pin.

14.2.2 Bit Rate

Divided-by-16 of frequency by the U0BRG register in UART mode is a bit rate.

<UART Mode>

• When selecting internal clock

$$\text{Setting value to the U0BRG register} = \frac{fj}{\text{Bit Rate} \times 16} - 1$$

Fj : Count source frequency of the U0BRG register (f1, f8 and f32)

• When selecting external clock

$$\text{Setting value to the U0BRG register} = \frac{fEXT}{\text{Bit Rate} \times 16} - 1$$

fEXT : Count source frequency of the U0BRG register (external clock)

Figure 14.11 Calculation Formula of U0BRG Register Setting Value

Table 14.7 Bit Rate Setting Example in UART Mode

Bit Rate (bps)	BRG Count Source	System Clock = 20MHz			System Clock = 8MHz		
		BRG Setting Value	Actual Time (bps)	Error(%)	BRG Setting Value	Actual Time (bps)	Error(%)
1200	f8	129(81h)	1201.92	0.16	51(33h)	1201.92	0.16
2400	f8	64(40h)	2403.85	0.16	25(19h)	2403.85	0.16
4800	f8	32(20h)	4734.85	-1.36	12(0Ch)	4807.69	0.16
9600	f1	129(81h)	9615.38	0.16	51(33h)	9615.38	0.16
14400	f1	86(56h)	14367.82	-0.22	34(22h)	14285.71	-0.79
19200	f1	64(40h)	19230.77	0.16	25(19h)	19230.77	0.16
28800	f1	42(2Ah)	29069.77	0.94	16(10h)	29411.76	2.12
31250	f1	39(27h)	31250.00	0.00	15(0Fh)	31250.00	0.00
38400	f1	32(20h)	37878.79	-1.36	12(0Ch)	38461.54	0.16
51200	f1	23(17h)	52083.33	1.73	9(09h)	50000.00	-2.34

15. Clock Synchronous Serial I/O with Chip Select (SSU)

The serial data of the clock synchronous can communicate for the clock synchronous serial I/O with chip select (hereinafter referred to as SSU). Table 15.1 shows a SSU Specification and Figure 15.1 shows a Block Diagram of SSU.
Figure 15.2 to 15.8 show SSU Associated Registers.

Table 15.1 SSU Specification

Item	Specification
Transfer Data Format	• Transfer-data length 8 bits Continuous transmit and receive of serial data are enabled since both transmitter and receiver have buffer structure.(2)
Operating Mode	• Clock synchronous communication mode • 4-wire bus communication mode (including bidirectional communication)
Master / Slave Device	Selectable
I/O Pin	SSCK (I/O) : Clock I/O pin SSI (I/O) : Data I/O pin SSO (I/O) : Data I/O pin $\overline{\text{SCS}}$ (I/O) : Chip-select I/O pin
Transfer Clock	• When the MSS bit in the SSCRH register is set to “0” (operates as slave device), external clock can be selected. • When the MSS bit in the SSCRH register is set to “1” (operates as master device), internal clock (selects from ϕ/256, ϕ/128, ϕ/64, ϕ/32, ϕ/16, ϕ/8 and ϕ/4 and outputs from SSCK pin) can be selected. • Clock polarity and phase of SSCK can be selected.
Receive Error Detection	• Overrun error Overrun error occurs during receive and completes by error. While the RDRF bit in the SSSR register is set to “1” (data in the SSRDR register) and completing the next serial data receive, the ORER bit is set to “1”.
Multimaster Error Detection	• Conflict error While the SSUMS bit in the SSMR2 register is set to “1” (4-wire bus communication mode) and the MSS bit in the SSCRH register is set to “1” (operates as master device) and when starting a serial communication, the CE bit in the SSSR register is set to “1” if “L” applies to the $\overline{\text{SCS}}$ pin input. When the SSUMS bit in the SSMR2 register is set to “1” (4-wire bus communication mode), the MSS bit in the SSCRH register is set to “0” (operates as slave device) and the $\overline{\text{SCS}}$ pin input changes state from “L” to “H”, the CE bit in the SSSR register is set to “1”.
Interrupt Request	5 interrupt requests (transmit-end, transmit-data-empty, receive-data-full, overrun error and conflict error).(1)
Select Function	• Data transfer direction Selects MSB-first or LSB-first • SSCK clock polarity Selects “L” or “H” level when clock stops • SSCK clock phase Selects edge of data change and data download

NOTES:
1. The interrupt vector table is one of the SSU.
2. When setting to the slave device, do not transmit continuously.

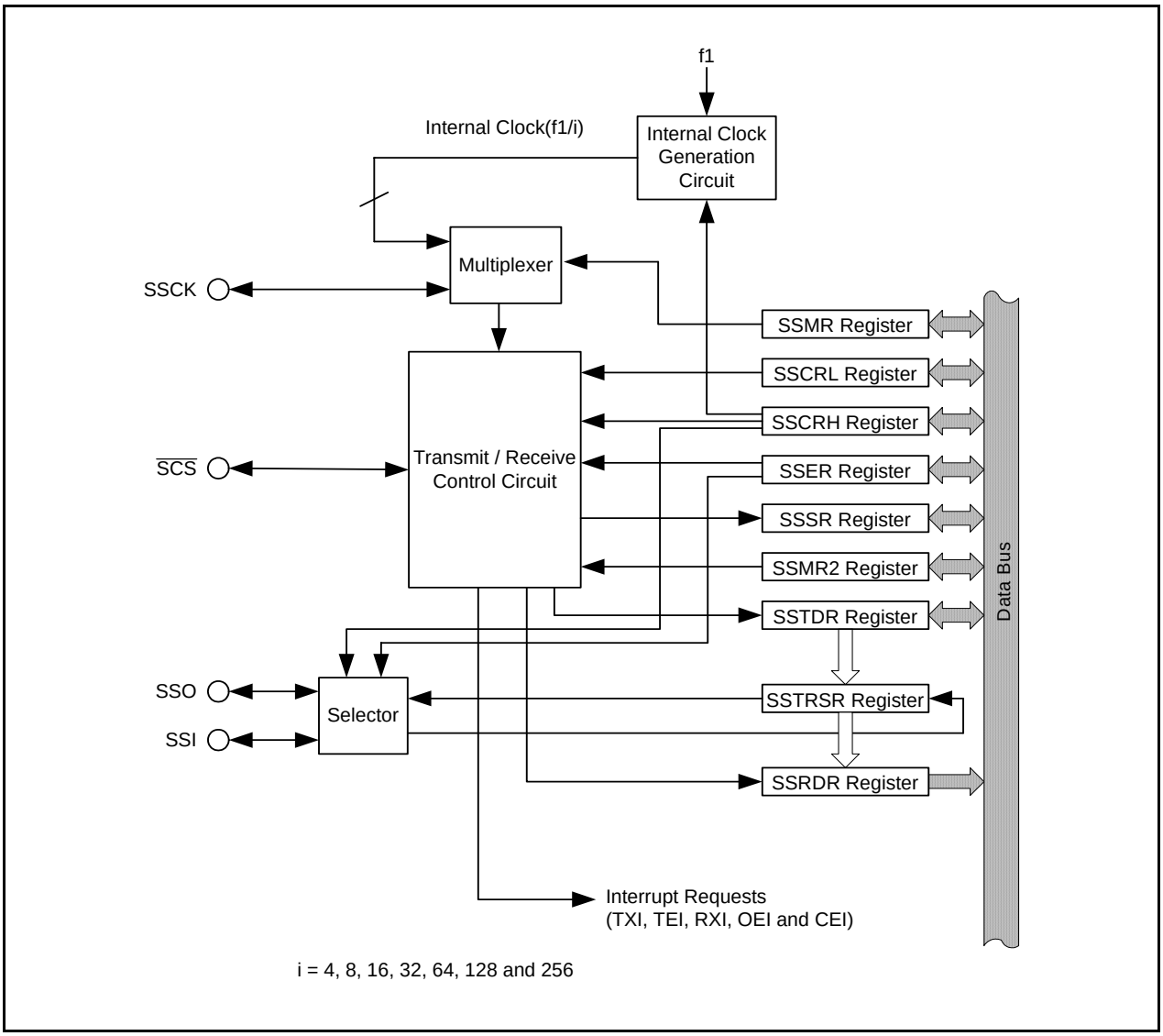

Figure 15.1 Block Diagram of SSU

SS Control Register H[4]

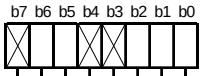

Symbol	Address	After Reset
SSCRH	00B8h	00h

Bit Symbol	Bit Name	Function	RW
CKS0	Transfer Clock Rate Select Bit[1]	b2 b1 b0 0 0 0 : f1/256 0 0 1 : f1/128 0 1 0 : f1/64 0 1 1 : f1/32 1 0 0 : f1/16 1 0 1 : f1/8 1 1 0 : f1/4 1 1 1 : Do not set	RW
CKS1			RW
CKS2			RW
— (b4-b3)	Nothing is assigned. When write, set to “0”. When read, its content is “0”.		—
MSS	Master/Slave Device Select Bit[2]	0 : Operates as slave device 1 : Operates as master device	RW
RSSTP	Receive Single Stop Bit[3]	0 : Maintains receive operation after receiving 1-byte data 1 : Completes receive operation after receiving 1-byte data	RW
— (b7)	Nothing is assigned. When write, set to “0”. When read, its content is “0”.		—

NOTES :

1. The set clock is used when the internal clock is selected.
2. The SSCK pin functions as the transfer clock output pin when the MSS bit is set to “1” (operates as master device). The MSS bit is set to “0” (operates as slave device) when the CE bit in the SSSR register is set to “1” (conflict error occurs).
3. The RSSTP bit is disabled when the MSS bit is set to “0” (operates as slave device).
4. Refer to **20.6.1 Access Registers Associated with SSU** for accessing registers associated with SSU.

Figure 15.2 SSCRH Register

SS Control Register L[4]

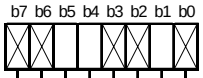

Symbol	Address	After Reset
SSCRL	00B9h	01111101b

Bit Symbol	Bit Name	Function	RW
— (b0)	Nothing is assigned. When write, set to “0”. When read, its content is “1”.		—
SRES	SSU Control Part Reset Bit	When this bit is set to “1”, the SSU control part and SSTRSR register are reset. The values of the registers[1] in the SSU register are maintained.	RW
— (b3-b2)	Nothing is assigned. When write, set to “0”. When read, its content is “1”.		—
SOLP	SOL Write Protect Bit[2]	The output level can be changed by the SOL bit when “0” when this bit is set to “0”. Writing “1” is disabled. When read, its content is “1”.	RW
SOL	Serial Data Output Value Setting Bit	When read, 0 : The last bit of the serial data output is set to “L” 1 : The last bit of the serial data output is set to “H” When write,[2,3] 0 : The data outputs “L” after the serial data output 1 : The data outputs “H” after the serial data output	RW
— (b6)	Nothing is assigned. When write, set to “0”. When read, its content is “1”.		—
— (b7)	Nothing is assigned. When write, set to “0”. When read, its content is “0”.		—

NOTES :

1. SSCRH, SSCRL, SSMR, SSER, SSSR, SSMR2, SSTDR and SSRDR registers.
2. The data output after the serial data is output can be changed when writing to the SOL bit before or after transfer. Set the SOLP bit to “0” and write to the SOLP and SOL bits by the MOV instruction when writing to the SOL bit.
3. Do not write to the SOL bit during the data transfer.
4. Refer to **20.6.1 Access Registers Associated with SSU** for accessing registers associated with SSU.

Figure 15.3 SSCRL Register

SS Mode Register (2)

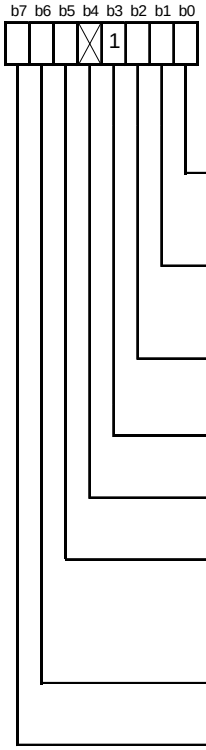

Symbol	Address	After Reset
SSMR	00BAh	00011000b

Bit Symbol	Bit Name	Function	RW
BC0	Bit Counter 2 to 0	b2 b1 b0 0 0 0 : 8-bit left 0 0 1 : 1-bit left 0 1 0 : 2-bit left 0 1 1 : 3-bit left 1 0 0 : 4-bit left 1 0 1 : 5-bit left 1 1 0 : 6-bit left 1 1 1 : 7-bit left	R
BC1			R
BC2			R
— (b3)	Reserved Bit	Set to “1”. When read, its content is “1”.	RW
— (b4)	Nothing is assigned. When write, set to “0”. When read, its content is “1”.		—
CPHS	SSCK Clock Phase Select Bit (1)	0 : Change data at odd edge (Downloads data at even edge) 1 : Change data at even edge (Downloads data at odd edge)	RW
CPOS	SSCK Clock Polarity Select Bit (1)	0 : “H” when clock stops 1 : “L” when clock stops	RW
MLS	MSB First/LSB First Select Bit	0 : Transfers data at MSB first 1 : Transfers data at LSB first	RW

NOTES :

1. Refer to **15.1.1 Association between Transfer Clock Polarity, Phase and Data** for the setting of the CPHS and CPOS bits.
2. Refer to **20.6.1 Access Registers Associated with SSU** for accessing registers associated with SSU.

Figure 15.4 SSMR Register

SS Enable Register(1)

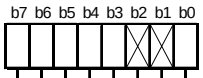

Symbol	Address	After Reset
SSER	00BBh	00h

Bit Symbol	Bit Name	Function	RW
CEIE	Conflict Error Interrupt Enable Bit	0 : Disables conflict error interrupt request 1 : Enables conflict error interrupt request	RW
— (b2-b1)	Nothing is assigned. When write, set to “0”. When read, its content is “0”.		—
RE	Receive Enable Bit	0 : Disables receive 1 : Enables receive	RW
TE	Transmit Enable Bit	0 : Disables transmit 1 : Enables transmit	RW
RIE	Receive Interrupt Enable Bit	0 : Disables receive data full and overrun error interrupt request 1 : Enables receive data full and overrun error interrupt request	RW
TEIE	Transmit End Interrupt Enable Bit	0 : Disables transmit end interrupt request 1 : Enables transmit end interrupt request	RW
TIE	Transmit Interrupt Enable Bit	0 : Disables transmit data empty interrupt request 1 : Enables transmit data empty interrupt request	RW

NOTES :

1. Refer to **20.6.1 Access Registers Associated with SSU** for accessing registers associated with SSU.

Figure 15.5 SSER Register

SS Status Register[7]

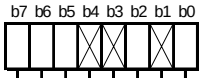

Symbol	Address	After Reset
SSSR	00BCh	00h

Bit Symbol	Bit Name	Function	RW
CE	Conflict Error Flag[1]	0 : No conflict error occurs 1 : Conflict error occurs[2]	RW
— (b1)	Nothing is assigned. When write, set to “0”. When read, its content is “0”.		—
ORER	Overrun Error Flag[1]	0 : No overrun error occurs 1 : Overrun error occurs[3]	RW
— (b4-b3)	Nothing is assigned. When write, set to “0”. When read, its content is “0”.		—
RDRF	Receive Data Register Full[1, 4]	0 : No data in SSRDR register 1 : Data in SSRDR register	RW
TEND	Transmit End[1, 5]	0 : The TDRE bit is set to “0” when transmitting the end of the bit in transmit data 1 : The TDRE bit is set to “1” when transmitting the end of the bit in transmit data	RW
TDRE	Transmit Data Empty[1, 5, 6]	0 : Data is not transferred from the SSTDR to SSTRSR registers 1 : Data is transferred from the SSTDR to SSTRSR registers	RW

NOTES :

1. When reading “1” and writing “0”, the CE, ORER, RDRF, TEND and TDRE bits are set to “0”.
2. When the serial communication is started while the SSUMS bit in the SSMR2 register is set to “1” (four-wire bus communication mode) and the MSS bit in the SSCRH register is set to “1” (operates as master device), the CE bit is set to “1” if “L” is applied to the $\overline{SCS}$ pin input. When the SSUMS bit in the SSMR2 register is set to “1” (four-wire bus communication mode), the MSS bit in the SSCRH register is set to “0” (operates as slave device) is set to “0” (operates as slave device) and the $\overline{SCS}$ pin input changes the level from “L” to “H” during transfer, the CE bit is set to “1”.
3. Indicates overrun error occurs and receive completes by error when receive. When the next serial data receive is completed while the RDRF bit is set to “1” (data in the SSRDR register), the ORER bit is set to “1”. After the ORER bit is set to “1” (overrun error occurs), do not transmit or receive while the ORER bit is set to “1”.
4. The RDRF bit is set to “0” when reading out the data from the SSRDR register.
5. The TEND and TDRE bits are set to “0” when writing the data to the SSTDR register.
6. The TDRE bit is set to “1” when setting the TE bit in the SSER register to “0” (disables transmit).
7. Refer to **20.6.1 Access Registers Associated with SSU** for accessing registers associated with SSU.

Figure 15.6 SSSR Register

SS Mode Register 2[5]

b7 b6 b5 b4 b3 b2 b1 b0

Symbol	Address	After Reset
SSMR2	00BDh	00h

Bit Symbol	Bit Name	Function	RW
SSUMS	SSU Mode Select Bit[1]	0 : Clock Synchronous Communication Mode 1 : Four-Wire Bus Communication Mode	RW
CSOS	$\overline{\text{SCS}}$ Pin Open Drain Output Select Bit	0 : CMOS output 1 : NMOS open drain output	RW
SOOS	SSO Pin Open Drain Output Select Bit[1]	0 : CMOS output 1 : NMOS open drain output	RW
SCKOS	SSCK Pin Open Drain Output Select Bit	0 : CMOS output 1 : NMOS open drain output	RW
CSS0	$\overline{\text{SCS}}$ Pin Select Bit[2]	b5 b4 0 0 : Functions as port 0 1 : Function as $\overline{\text{SCS}}$ input pin 1 0 : Function as $\overline{\text{SCS}}$ output pin[3] 1 1 : Functions as $\overline{\text{SCS}}$ output pin[3]	RW
CSS1			RW
SCKS	SSCK Pin Select Bit	0 : Functions as port 1 : Functions as serial clock pin	RW
BIDE	Bidirectional Mode Enable Bit[1, 4]	0 : Standard mode (communicates using 2 pins of data input and data output) 1 : Bidirectional mode (communicates using 1 pin of data input and data output)	RW

NOTES :

1. Refer to **15.2 Relationship between Data I/O Pin and SS Shift Register** for the combination of the data I/O pin.
2. The $\overline{\text{SCS}}$ pin functions as a port, regardless of the contents of the CSS0 and CSS1 bits when the SSUMS bit is set to “0” (clock synchronous communication mode).
3. This bit functions as the $\overline{\text{SCS}}$ input pin before starting transfer.
4. The BIDE bit is disabled when the SSUMS bit is set to “0” (clock synchronous communication mode).
5. Refer to **20.6.1 Access Registers Associated with SSU** for accessing registers associated with SSU.

Figure 15.7 SSMR2 Register

SS Transmit Data Register (2)

b7 b6 b5 b4 b3 b2 b1 b0

Symbol	Address	After Reset
SSTDR	00BEh	FFh

Function	RW
Store the transmit data. The stored transmit data is transferred to the SSTRSR register and the transmit is started when detecting the SSTRSR register is empty. When the next transmit data is written to the SSTDR register during the data transmit from the SSTRSR register, the data can be transmitted continuously.(1) When the MLS bit in the SSMR register is set to "1" (transfer data with LSB-first), the data in which MSB and LSB are reversed can be read, after writing to the SSTDR register.	RW

NOTES :

1. When setting to the slave device, do not transmit continuously.
2. Refer to **20.6.1 Access Registers Associated with SSU** for accessing registers associated with SSU.

SS Receive Data Register (2)

b7 b6 b5 b4 b3 b2 b1 b0

Symbol	Address	After Reset
SSRDR	00BFh	FFh

Function	RW
Store the receive data.(1) The receive data is transferred to the SSRDR register and the receive operation is completed when receiving 1-byte data to the SSTRSR register. At this time, the following receive is possible. The continuous receive is possible by the SSTRSR and SSRDR registers.	RO

NOTES :

1. The SSRDR register maintains the receive data before the overrun error occurs when the ORER bit in the SSSR register is set to "1" (overrun error occurs). When an overrun error occurs, the receive data may contain errors and therefore, should be discarded.
2. Refer to **20.6.1 Access Registers Associated with SSU** for accessing registers associated with SSU.

Figure 15.8 SSTDR and SSRDR Register

15.1 Transfer Clock

A transfer clock can be selected from 7 internal clocks (ϕ/256, ϕ/128, ϕ/64, ϕ/32, ϕ/16, ϕ/8 and ϕ/4) and an external clock.
When using the SSU, set the SCKS bit in the SSMR2 register to “1” and select the SSCK pin as the serial clock pin.
When the MSS bit in the SSCRH register is set to “1” (operates as master device), an internal clock can be selected and the SSCK pin functions as output. When transfer is started, the SSCK pin outputs clocks of the transfer rate selected in the CKS0 to CKS2 bits in the SSCRH register.
When the MSS bit in the SSCRH register is set to “0” (operates as slave device), an external clock can be selected and the SSCK pin functions as input.

15.1.1 Association between Transfer Clock Polarity, Phase and Data

Association between transfer clock polarity, phase and data changes according to a combination of the SSUMS bit in the SSMR2 register and the CPHS and CPOS bits in the SSMR register. Figure 15.9 shows the Association between Transfer Clock Polarity, Phase and Transfer Data.
Also, the MSB-first transfer or LSB-first transfer can be selected by setting the MLS bit in the SSMR register. When the MLS bit is set to “1”, transfer is started from the LSB to MSB. When the MLS bit is set to “0”, transfer is started from the MSB to LSB.

- When SSUMS=0 (clock synchronous communication mode), CPHS bit=0 (data change at odd edge) and CPOS bit=0 (“H” when clock stops)

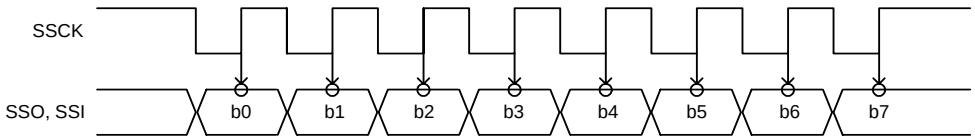

- When SSUMS=1 (4-wire bus communication mode) and CPHS=0 (data change at odd edge)

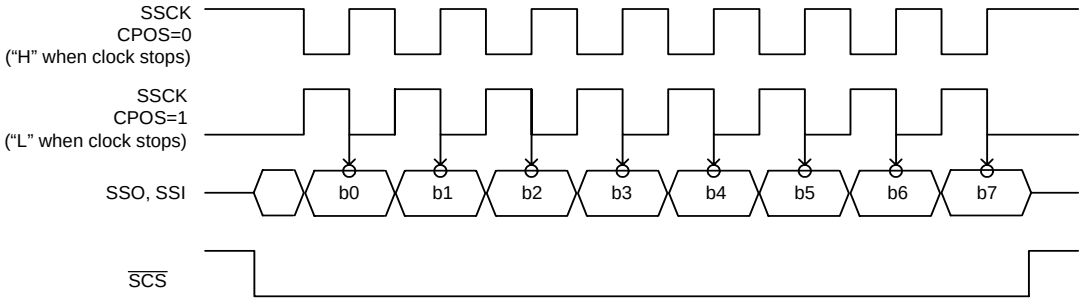

- When SSUMS=1 (4-wire bus communication mode), CPHS=1 (data download at odd edge)

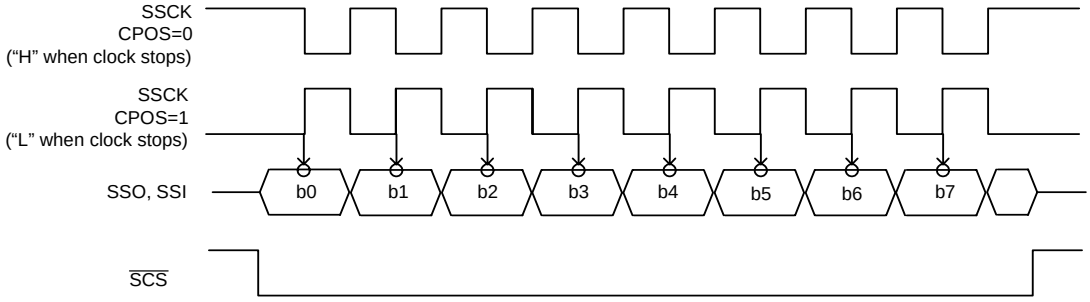

CPHS and CPOS : bits in SSMR register, SSUMS : Bits in SSMR2 register

Figure 15.9 Association between Transfer Clock Polarity, Phase and Transfer Data

15.2 SS Shift Register (SSTRSR)

The SSTRSR register is the shift register to transmit and receive the serial data.
When the transmit data is transferred from the SSTDR register to the SSTRSR register and the MLS bit in the SSMR register is set to “0” (MSB-first), the bit 0 in the SSTDR register is transferred to the bit 0 in the SSTRSR register. When the MLS bit is set to “1” (LSB-first), the bit 7 in the SSTDR register is transferred to the bit 0 in the SSTRSR register.

15.2.1 Association between Data I/O Pin and SS Shift Register

Connecting association between the data I/O pin and SSTRSR register (SS shift register) changes according to a combination of the MSS bit in the SSCRH register and the SSUMS bit in the SSMR2 register. Also, connecting association changes according to the BIDE bit in the SSMR2 register. Figure 15.10 shows a Connecting Association between Data I/O Pin and SSTRSR Register.

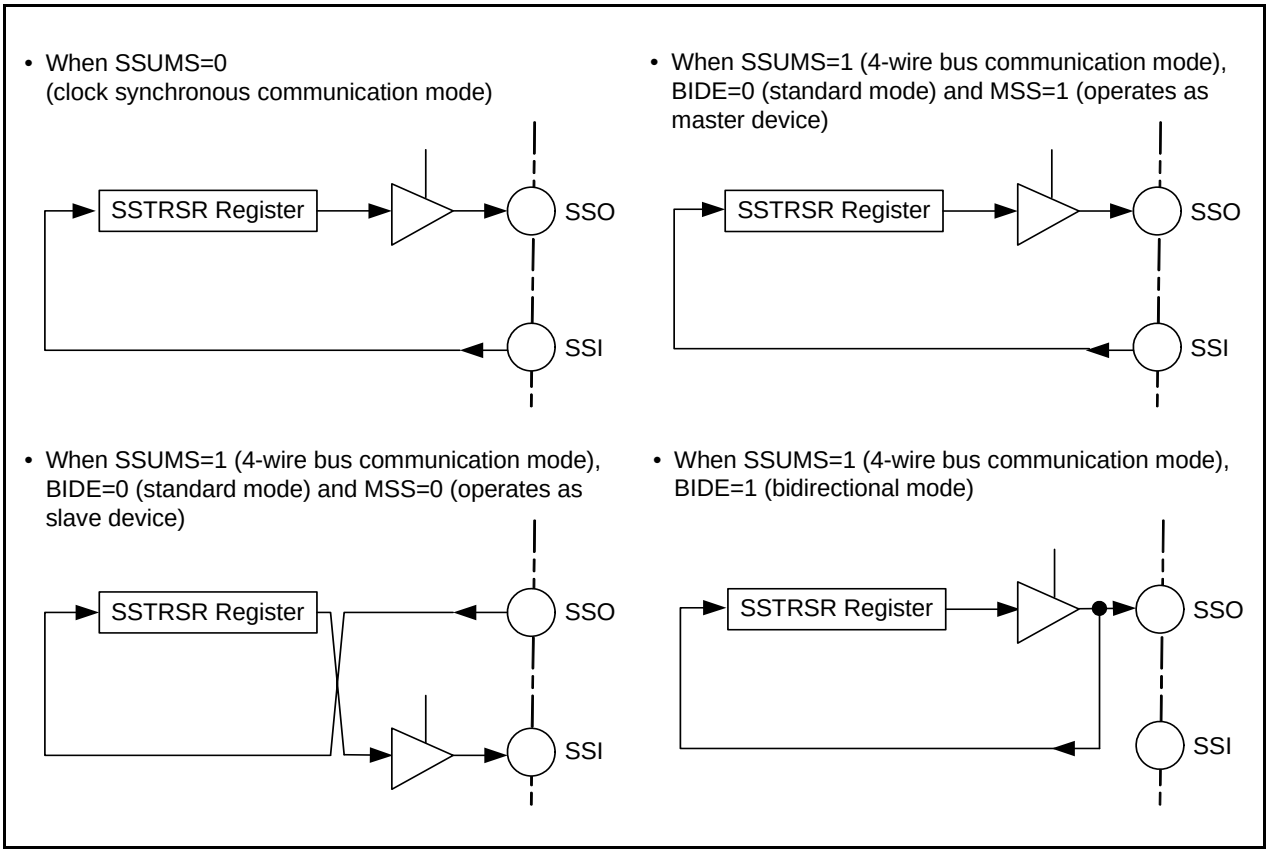

Figure 15.10 Connecting Association between Data I/O Pin and SSTRSR Register

15.3 Interrupt Requests

SSU has five interrupt requests : transmit data empty, transmit end, receive data full, overrun error and conflict error. Since these interrupt requests are assigned to the SSU interrupt vector table, determining interrupt sources by flags is required. Table 15.2 shows the SSU Interrupt Requests.

Table 15.2 SSU Interrupt Requests

Interrupt Request	Abbreviation	Generation Condition
Transmit Data Empty	TXI	TIE=1, TDRE=1
Transmit End	TEI	TEIE=1, TEND=1
Receive Data Full	RXI	RIE=1, RDRF=1
Overrun Error	OEI	RIE=1, ORER=1
Conflict Error	CEI	CEIE=1, CE=1

CEIE, RIE, TEIE and TIE : Bits in SSER register
ORER, RDRF, TEND and TDRE : Bits in SSSR register

Generation conditions of Table 15.2 are met, a SSU interrupt request is generated.Set the each interrupt source to “0” by a SSU interrupt routine.

However, the TDRE and TEND bits are automatically set to “0” by writing the transmit data to the SSTDR register and the RDRF bit is automatically set to “0” by reading the SSRDR register. When writing the transmit data to the SSTDR register, at the same time the TDRE bit is set to “1” (data is transmitted from the SSTDR to SSTRSR registers) again and when setting the TDRE bit to “0” (data is not transmitted from the SSTDR to SSTRSR registers), additional 1-byte data may be transmitted.

15.4 Communication Modes and Pin Functions

SSU switches functions of the I/O pin in each communication mode according to the setting of the MSS bit in the SSCRH register and the RE and TE bits in the SSER register. Table 15.3 shows the Association between Communication Modes and I/O Pins.

Table 15.3 Association between Communication Modes and I/O Pins

Communication Mode	Bit Setting					Pin State		
	SSUMS	BIDE	MSS	TE	RE	SSI	SSO	SSCK
Clock Synchronous Communication Mode	0	Disabled	0	0	1	Input	–(1)	Input
				1	0	–(1)	Output	Input
					1	Input	Output	Input
			1	0	1	Input	–(1)	Output
				1	0	–(1)	Output	Output
					1	Input	Output	Output
4-Wire Bus Communication Mode	1	0	0	0	1	–(1)	Input	Input
				1	0	Output	–(1)	Input
					1	Output	Input	Input
			1	0	1	Input	–(1)	Output
				1	0	–(1)	Output	Output
					1	Input	Output	Output
4-Wire Bus (Bidirectional) Communication Mode(2)	1	1	0	0	1	–(1)	Input	Input
				1	0	–(1)	Output	Input
			1	0	1	–(1)	Input	Output
				1	0	–(1)	Output	Output

NOTES:
1. This pin can be used as programmable I/O port.
2. Do not set both the TE and RE bits to “1” in 4-wire bus (bidirectional) communication mode.

SSUMS and BIDE : Bits in SSMR2 register
MSS : Bit in SSCRH register
TE and RE : Bits in SSER register

15.5 Clock Synchronous Communication Mode

15.5.1 Initialization in Clock Synchronous Communication Mode

Figure 15.11 shows an Initialization in Clock Synchronous Communication Mode. Set the TE bit in the SSER register to “0” (disables transmit) and the RE bit to “0” (disables receive) before data transmit / receive as an initialization.
When communication mode and format are changed, set the TE bit to “0” and the RE bit to “0” before changing.
Setting the RE bit to “0” does not change the contents of the RDRF and ORER flags, and the contents of the SSRDR register.

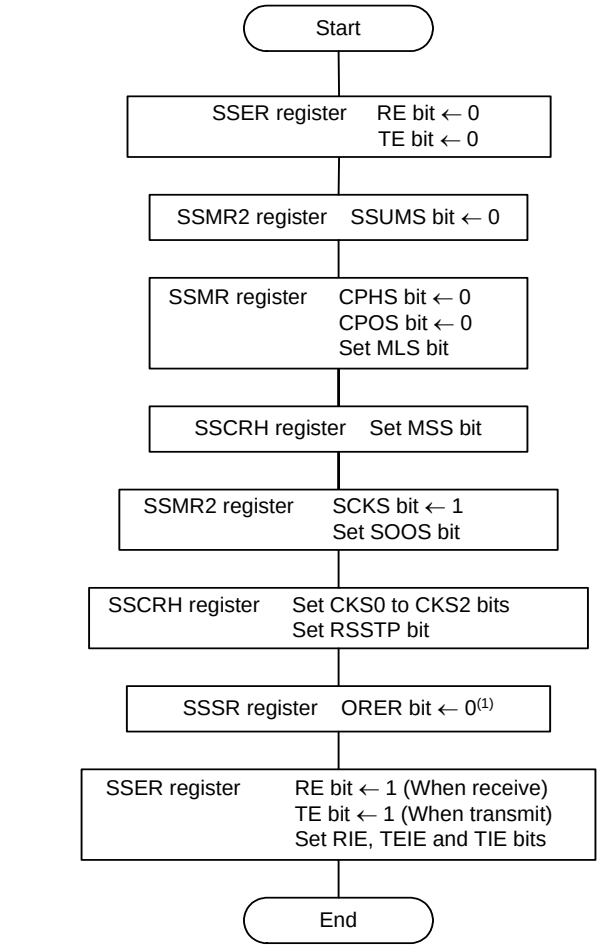

NOTES:
1. Write “0” after reading “1” to set the ORER bit to “0”.

Figure 15.11 Initialization in Clock Synchronous Communication Mode

15.5.2 Data Transmit

Figure 15.12 shows an Example of SSU Operation for Data Transmit (Clock Synchronous Communication Mode). During the data transmit, the SSU operates as described below.
When the SSU is set as a master device, it outputs a synchronous clock and data.
When the SSU is set as a slave device, it outputs data synchronized with the input clock. When setting the TE bit to “1” (enables transmit) before writing the transmit data to the SSTDR register, the TDRE bit is automatically set to “0” (data is not transferred from the SSTDR to SSTRSR registers) and the data is transferred from the SSTDR to SSTRSR registers.
After the TDRE bit is set to “1” (data is transferred from the SSTDR to SSTRSR registers), a transmit is started. When the TIE bit in the SSER register is set to “1”, the TXI interrupt request is generated. When one frame of data is transferred while the TDRE bit is set to “0”, data is transferred from the SSTDR to SSTRSR registers and a transmit of the next frame is started. If the 8th bit is transmitted while the TDRE bit is set to “1”, the TEND bit in the SSSR register is set to “1” (the TDRE bit is set to “1” when the last bit of the transmit data is transmitted) and the state is retained. The TEI interrupt request is generated when the TEIE bit in the SSER register is set to “1” (enables transmit-end interrupt request). The SSCK pin is retained “H” after transmit-end.
Transmit can not be performed while the ORER bit in the SSRR register is set to “1” (overrun error occurs). Confirm that the ORER bit is set to “0” before transmit.
When setting the microcomputer to the slave device, ensure the TEND bit is set to “1” (data transmit ends) and write the following transmit data to the SSTDR register. When setting the microcomputer to the master device, continuous transmit is enabled.
Figure 15.13 shows a Sample Flowchart for Data Transmit (Clock Synchronous Communication Mode).

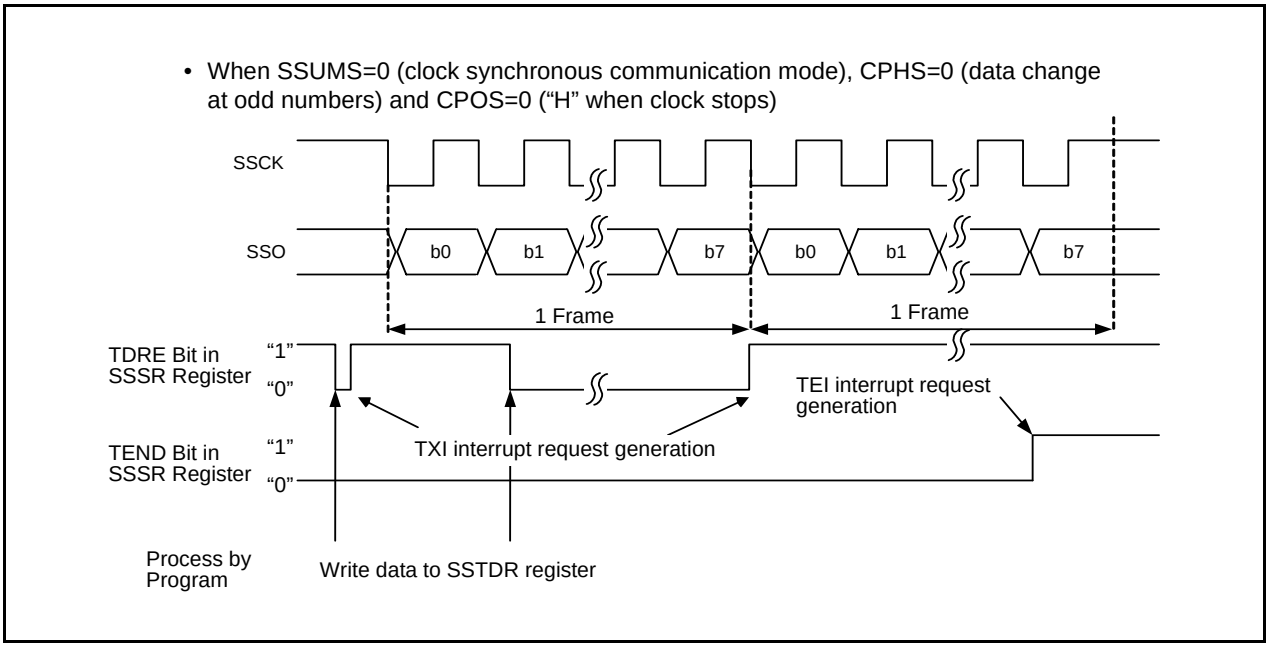

Figure 15.12 Example of SSU Operation for Data Transmit (Clock Synchronous Communication Mode)

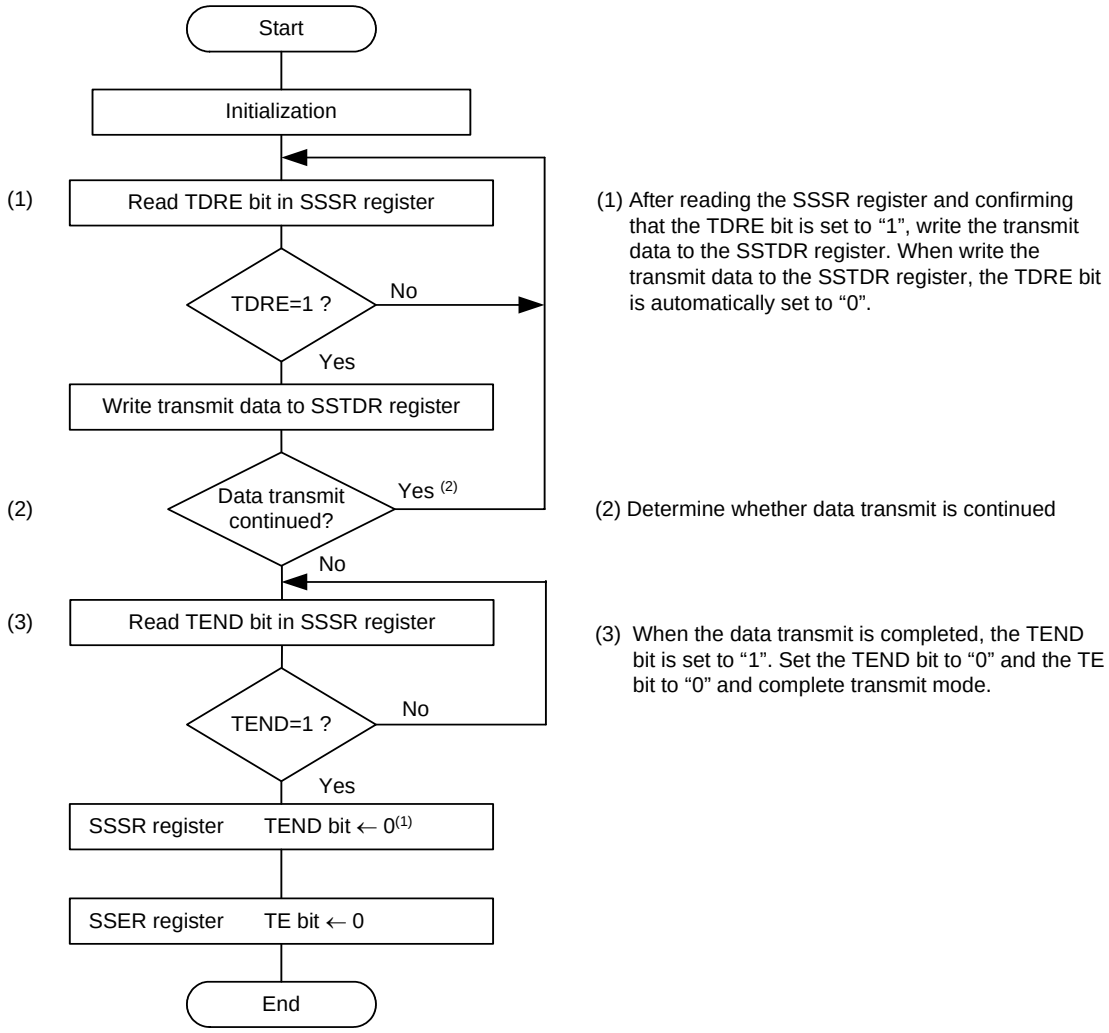

NOTES:
1. Write "0" after reading "1" to set the TEND bit to "0".
2. When setting the microcomputer to the slave device, ensure the TEND bit is set to "1" (data transmit ends) and write the following transmit data to the SSTDR register. When setting the microcomputer to the master device, continuous transmit is enabled.

Figure 15.13 Sample Flowchart for Data Transmit (Clock Synchronous Communication Mode)

15.5.3 Data Receive

Figure 15.14 shows an Example of Operation for Data Receive (Clock Synchronous Communication Mode).

During the data receive, the SSU operates as described below. When the SSU is set as a master device, it outputs a synchronous clock and inputs data.

When the SSU is set as a salve device, it outputs data synchronized with the input clock. When the SSU is set as a master device, it outputs a receive clock and starts receiving by performing dummy read on the SSRDR register.

After the 8-bit data is received, the RDRF bit in the SSSR register is set to “1” (data in the SSRDR register) and receive data is stored in the SSRDR register. When the RIE bit in the SSER register is set to “1” (enables RXI and OEI interrupt request), the RXI interrupt request is generated. If the SSDR register is read, the RDRF bit is automatically set to “0” (no data in the SSRDR register).

Read the receive data after setting the RSSTP bit in the SSCRH register to “1” (after receiving 1-byte data, the receive operation is completed). The SSU outputs a clock for receiving 8-bit data and stops. After that, set the RE bit in the SSER register to “0” (disables receive) and the RSSTP bit to “0” (receive operation is continued after receiving the 1-byte data) and read the receive data. If the SSRDR register is read while the RE bit is set to “1” (enables receive), a receive clock is output again.

When the 8th clock rises while the RDRF bit is set to “1”, the ORER bit in the SSSR register is set to “1” (overrun error occurs : OEI) and the operation is stopped. When the ORER bit is set to “1”, receive can not be performed. Confirm that the ORER bit is set to “0” before restarting receive.

Figure 15.15 shows a Sample Flowchart for Data Receive (MSS=1) (Clock Synchronous Communication Mode).

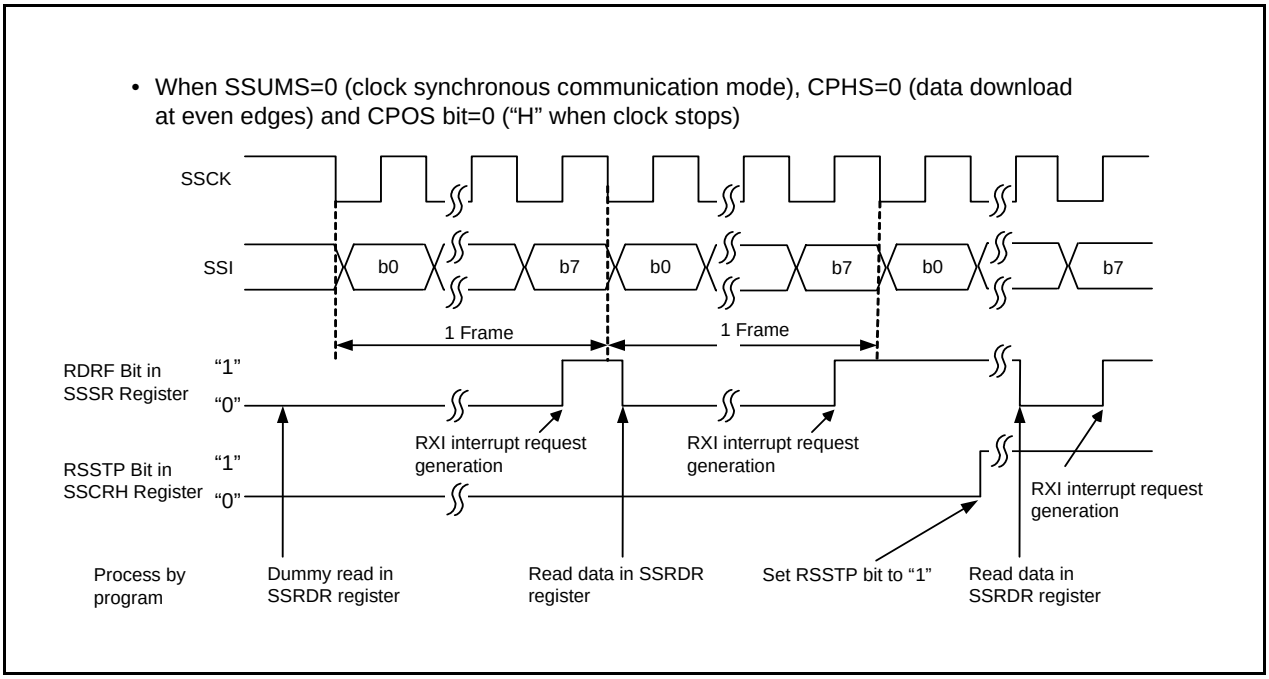

Figure 15.14 Example of Operation for Data Receive (Clock Synchronous Communication Mode)

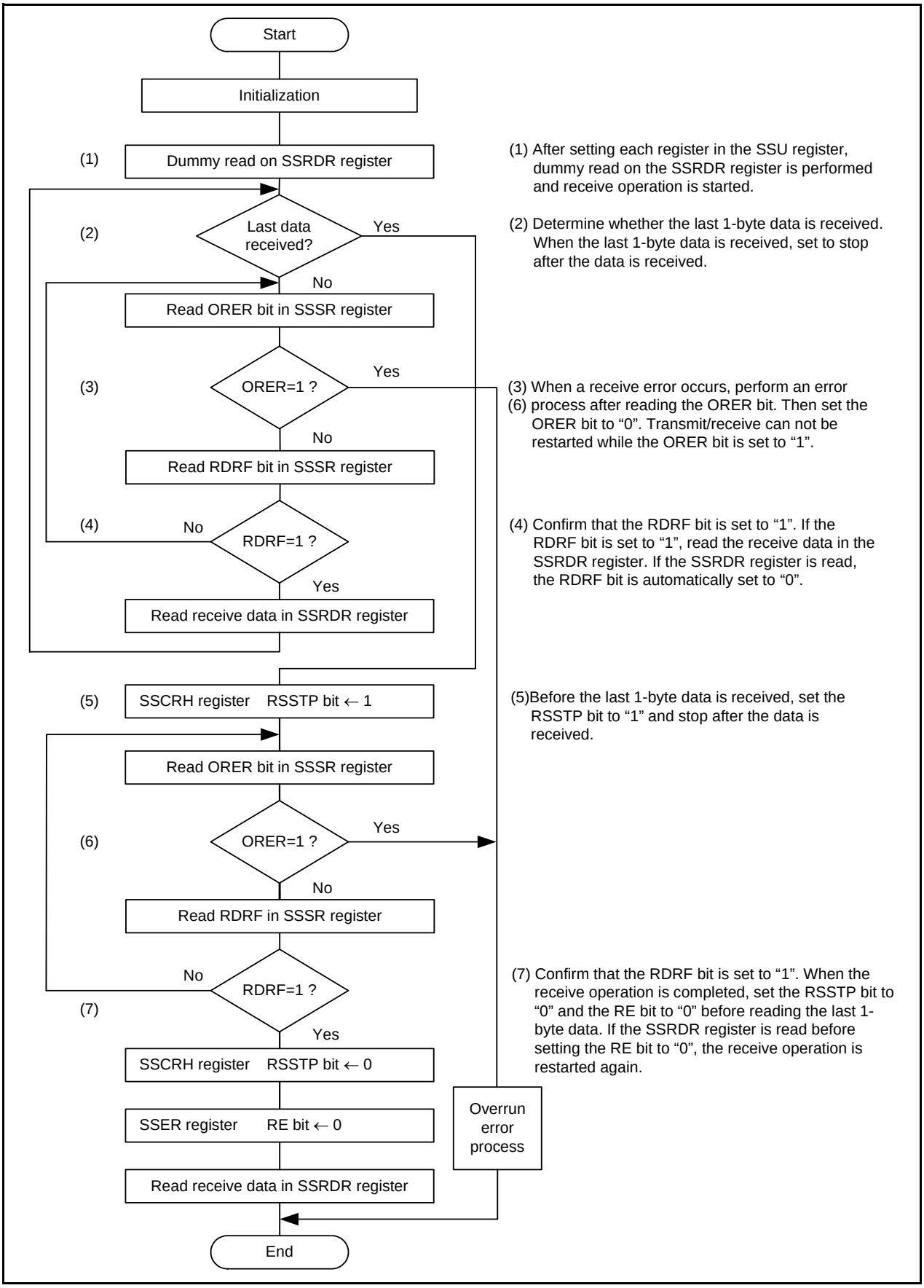

Figure 15.15 Sample Flowchart for Data Receive (MSS=1) (Clock Synchronous Communication Mode)

15.5.4 Data Transmit/Receive

Data transmit/receive is a combined operation of data transmit and receive which are described before. Transmit/receive is started by writing data in the SSTDR register.

When the 8th clock rises or the ORER bit is set to “1” (overrun error occurs) while the TDRE bit is set to “1” (data is transferred from the SSTDR to SSTRSR registers), the transmit/receive operation is stopped.

When switching from transmit mode (TE=1) or receive mode (RE=1) to transmit/receive mode (Te=RE=1), set the TE bit to “0” and RE bit to “0” before switching. After confirming that the TEND bit is set to “0” (the TDRE bit is set to “0” when the last bit of the transmit data is transmitted), the RERF bit is set to “0” (no data in the SSRDR register) and the ORER bit is set to “0” (no overrun error), set the TE and RE bits to “1”.

When setting the microcomputer to the slave device, ensure the TEND bit is set to “1” (data transmit ends) and write the following transmit data to the SSTDR register. When setting the microcomputer to the master device, continuous transmit is enabled.

Figure 15.16 shows a Sample Flowchart for Data Transmit/Receive (Clock Synchronous Communication Mode).

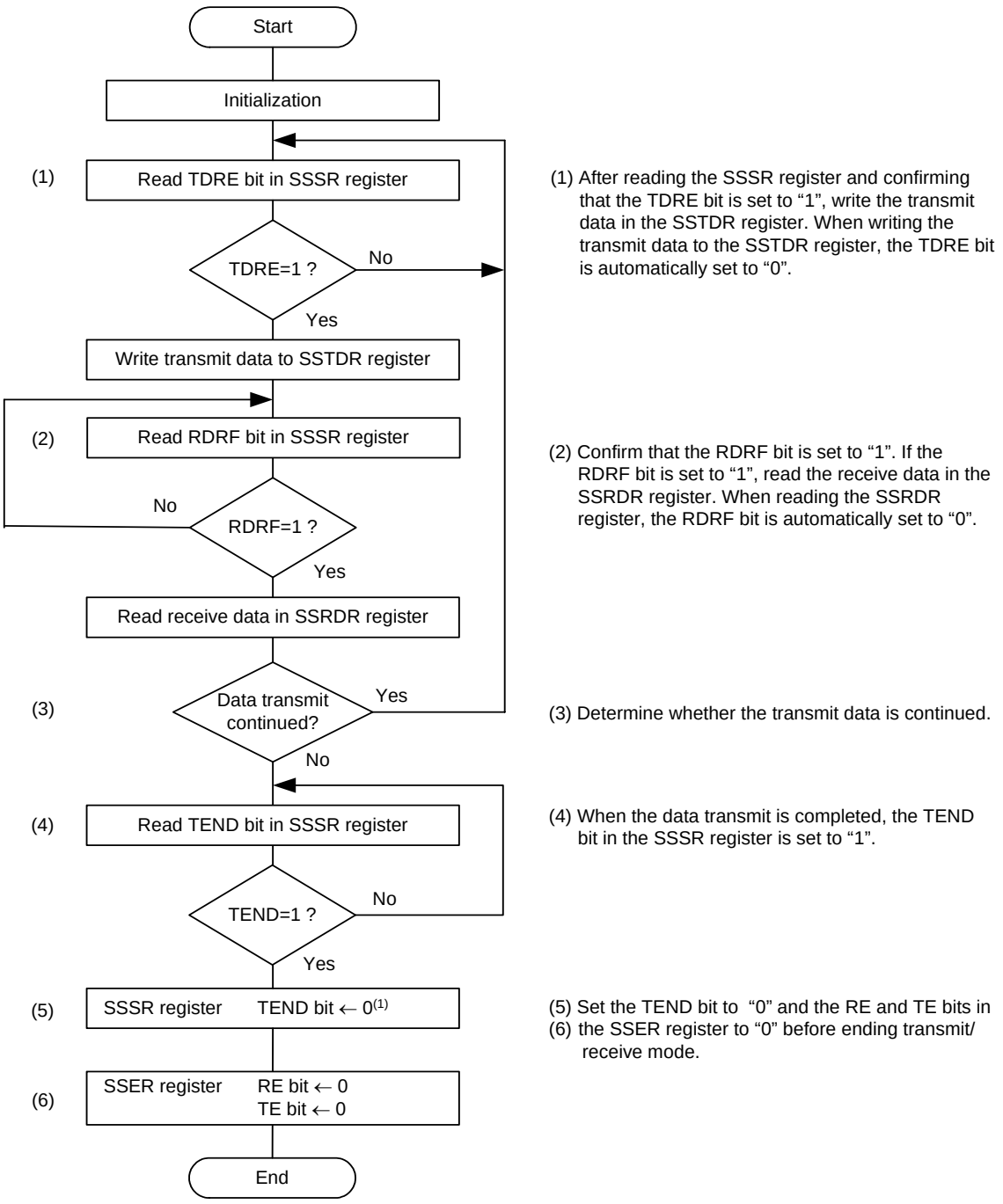

NOTES:
1. Write "0" after reading "1" to set the TEND bit to "0".

Figure 15.16 Sample Flowchart for Data Transmit/Receive (Clock Synchronous Communication Mode)

15.6 Operation in 4-Wire Bus Communication Mode

4-wire bus communication mode is a mode which communicates with the 4-wire bus; a clock line, data input line, data output line and chip select line. This mode includes bidirectional mode in which the data input line and data output line function as a single pin.

The data input line and output line are changed according to the setting of the MSS bit in the SSCRH register and the BIDE bit in the SSMR2 register. For details, refer to **15.2.1 Association between Data I/O Pin and SS Shift Register**. In this mode, association between the clock polarity, phase and data can be set by the CPOS and CPHS bits in the SSMR register. For details, refer to **15.1.1 Association between Transfer Clock Polarity, Phase and Data**.

When the SSU is set as a master device, the chip select line controls output. When the SSU is set as a slave device, the chip select line controls input. When the SSU is set as master device, the chip select line controls output of the $\overline{\text{SCS}}$ pin or controls output of a general port by setting the CSS1 bit in the SSMR2 register. When the SSU is set as a slave device, the chip select line set the $\overline{\text{SCS}}$ pin as an input pin by setting the CSS1 and CSS0 bits in the SSMR2 register to “01b”.

In 4-wire bus communication mode, the MLS bit in the SSMR register is set to “0” and communication is performed using the MSB-first.

15.6.1 Initialization in 4-Wire Bus Communication Mode

Figure 15.17 shows an Initialization in 4-Wire Bus Communication Mode. Before the data transit/receive, set the TE bit in the SSER register to “0” (disables transmit) and the RE bit in the SSER register to “0” (disables receive) and initialize the SSU.

When communication mode and format are changed, set the TE bit to “0” and the RE bit to “0” before changing.

Setting the RE bit to “0” does not change the contents of the RDRF and ORER flags, and the contents of the SSRDR register.

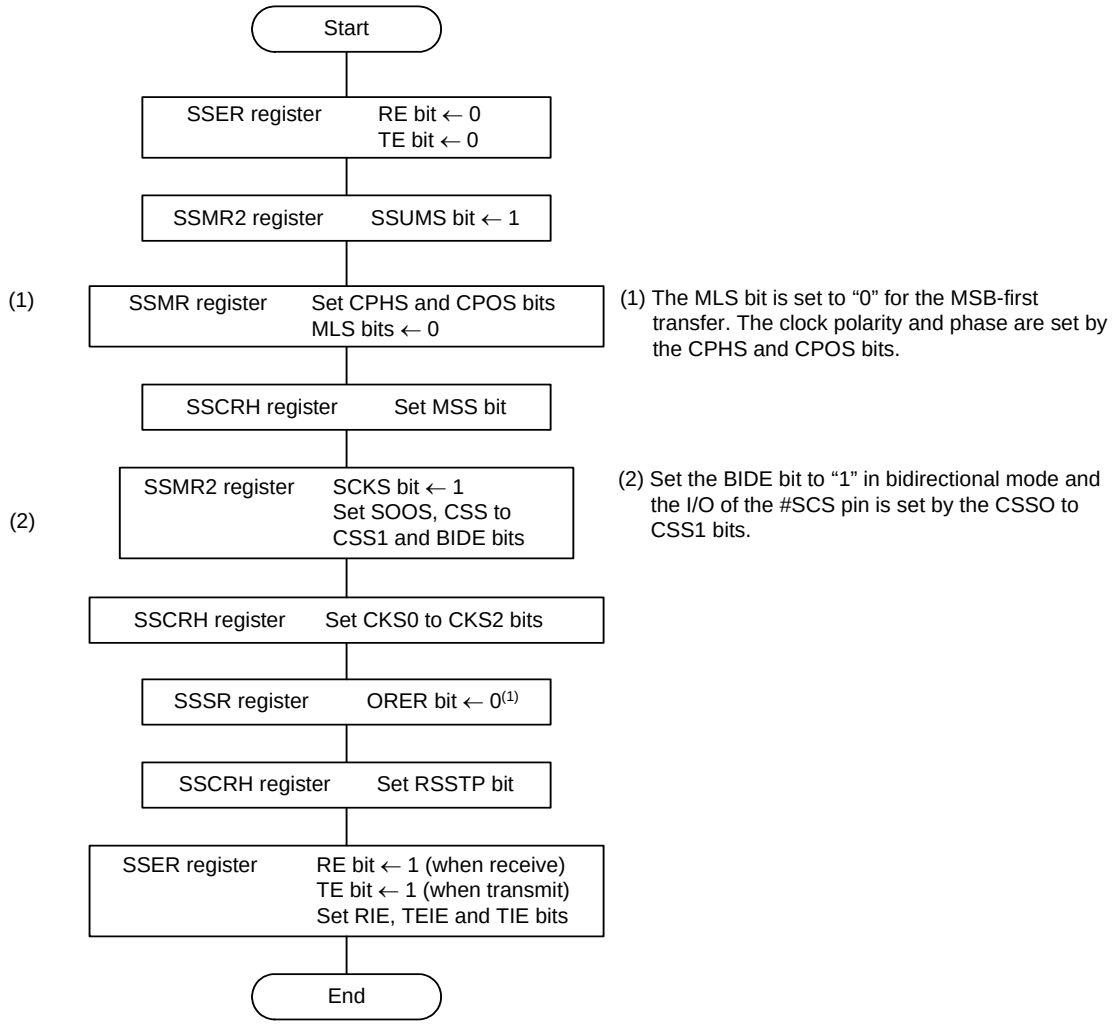

NOTES:
1. Write "0" after reading "1" to set the ORER bit to "0".

Figure 15.17 Initialization in 4-Wire Bus Communication Mode

15.6.2 Data Transmit

Figure 15.18 shows an Example of Operation in Data Transmit (4-Wire Bus Communication Mode). During the data transmit, the SSU operates as described below.

When the SSU is set as a master device, it outputs a synchronous clock and data. When the UUSA is set as a slave device, it outputs data in synchronized with the input clock while “L” applies to the $\overline{\text{SCS}}$ pin.

When writing the transmit data to the SSTDR register after setting the TE bit to “1” (enables transmit), the TDRE bit is automatically set to “0” (data is not transferred from the SSTDR to SSTRSR registers) and the data is transferred from the SSTDR to SSTRSR registers. After the TDRE bit is set to “1” (data is transferred from the SSTDR to SSTRSR registers), a transmit is started. When the TIE bit in the SSER register is set to “1”, the TXI interrupt request is generated.

When the 1-frame data is transferred while the TDRE bit is set to “0”, the data is transferred from the SSTDR to SSTRSR registers and the next frame transmit is started. If the 8th bit is transmitted while the TDRE is set to “1”, the TEND in the SSSR register is set to “1” (when the last bit of the transmit data is transmitted, the TDRE bit is set to “1”) and the state is retained. If the TEIE bit in the SSER register is set to “1” (enables transmit-end interrupt request), the TEI interrupt request is generated. The SSCK pin is retained “H” after transmit-end and the $\overline{\text{SCS}}$ pin is held “H”. When the $\overline{\text{SCS}}$ pin is transmitted When transmitting continuously while the $\overline{\text{SCS}}$ pin is held “L”, write the next transmit data to the SSTDR register before transmitting the 8th bit.

Transmit can not be performed while the ORER bit in the SSSR register is set to “1” (overrun error occurs). Confirm that the ORER bit is set to “0” before transmit.

When setting the microcomputer to the slave device, ensure the TEND bit is set to “1” (data transmit ends) and write the following transmit data to the SSTDR register. When setting the microcomputer to the master device, continuous transmit is enabled.

The difference from the clock synchronous communication mode is that the SSO pin is placed in high-impedance state while the $\overline{\text{SCS}}$ pin is placed in high-impedance state when operating as a master device and the SSI pin is placed in high-impedance state while the $\overline{\text{SCS}}$ pin is placed in “H” input state when operating as a slave device.

A sample flowchart is the same as the clock synchronous communication mode (Refer to **Figure 15.13 Sample Flowchart for Data Transmit (Clock Synchronous Communication Mode)**).

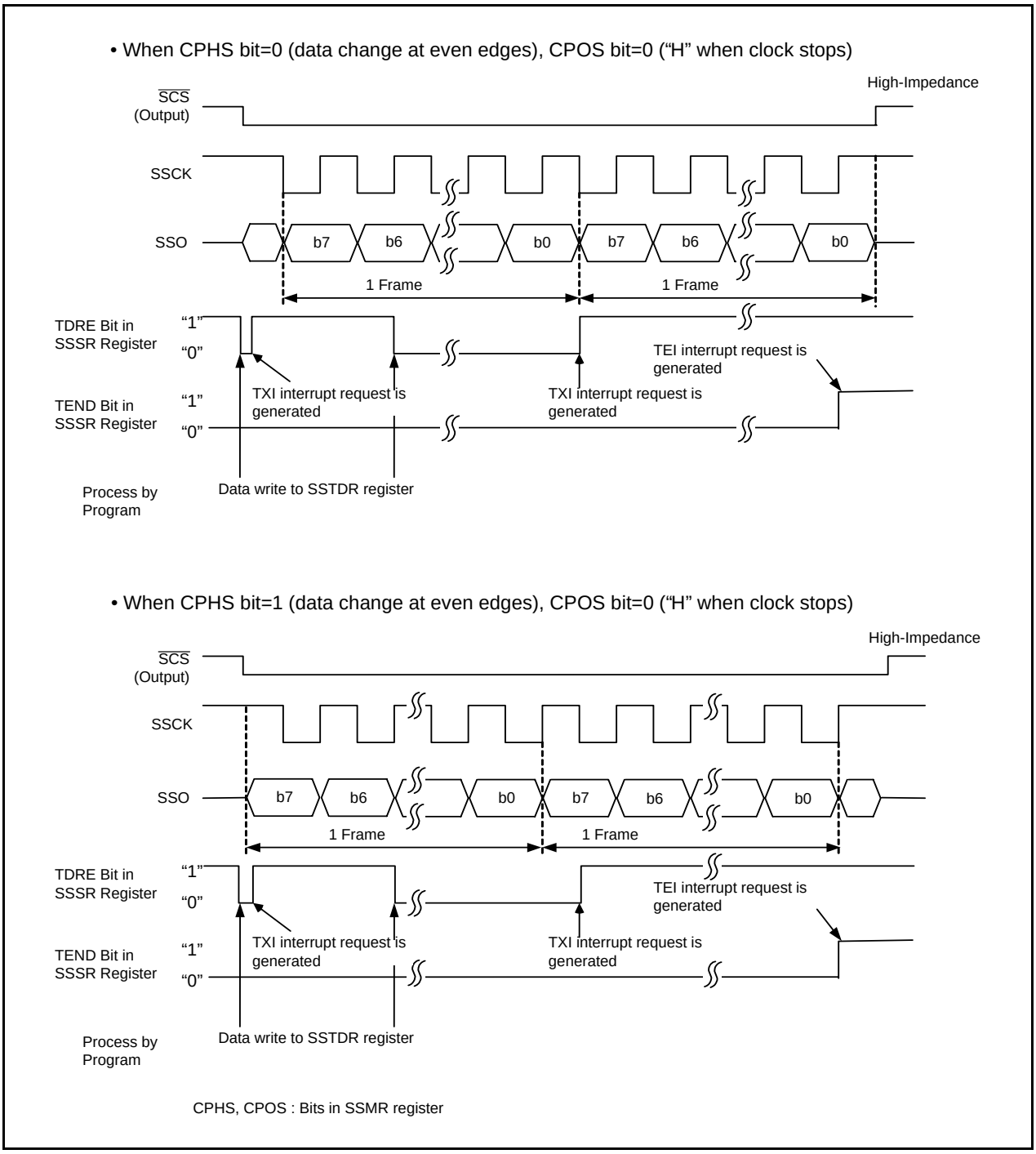

Figure 15.18 Example of Operation in Data Transmit (4-Wire Bus Communication Mode)

15.6.3 Data Receive

Figure 15.19 shows an example of the SSU operation for the data receive. During the data receive, the SSU operates as described below.

When the SSU is set as a master device, it outputs a synchronous clock and inputs data. When the SSU is set as a salve device, it outputs data synchronized with the input clock while the $\overline{SCS}$ pin is held “L” input. When the SSU is set as a master device, it outputs a receive clock and starts receiving by performing dummy read on the SSRDR register.

After the 8-bit data is received, the RDRF bit in the SSSR register is set to “1” (data in the SSRDR register) and receive data is stored in the SSRDR register. When the RIE bit in the SSER register is set to “1” (enables RXI and OEI interrupt request), the RXI interrupt request is generated. If the SSRDR register is read, the RDRF bit is automatically set to “0” (no data in the SSRDR register).

Read the receive data after setting the RSSTP bit in the SSCRH register to “1” (after receiving 1-byte data, the receive operation is completed). The SSU outputs a clock for receiving 8-bit data and stops. After that, set the RE bit in the SSER register to “0” (disables receive) and the RSSTP bit to “0” (receive operation is continued after receiving 1-byte data) and read the receive data. If the SSRDR register is read while the RE bit is set to “1” (enables receive), a receive clock is output again.

When the 8th clock rises while the RDRF bit is set to “1”, the ORER bit in the SSSR register is set to “1” (overrun error occurs : OEI) and the operation is stopped. When the ORER bit is set to “1”, receive can not be performed. Confirm that the ORER bit is set to “0” before restarting receive.

When the RDRF and ORER bits are set to “1”, it varies depending on setting the CPHS bit in the SSMR register. Figure 15.19 shows when the RDRF and ORER bits are set to “1”.

When the CPHS bit is set to “1” (data download at the odd edges), the RDRF and ORER bits are set to “1” at one point of a frame.

A sample flowchart is the same as the clock synchronous communication mode (Refer to **Figure 15.15 Sample Flowchart for Data Receive (MSS=1) (Clock Synchronous Communication Mode)**).

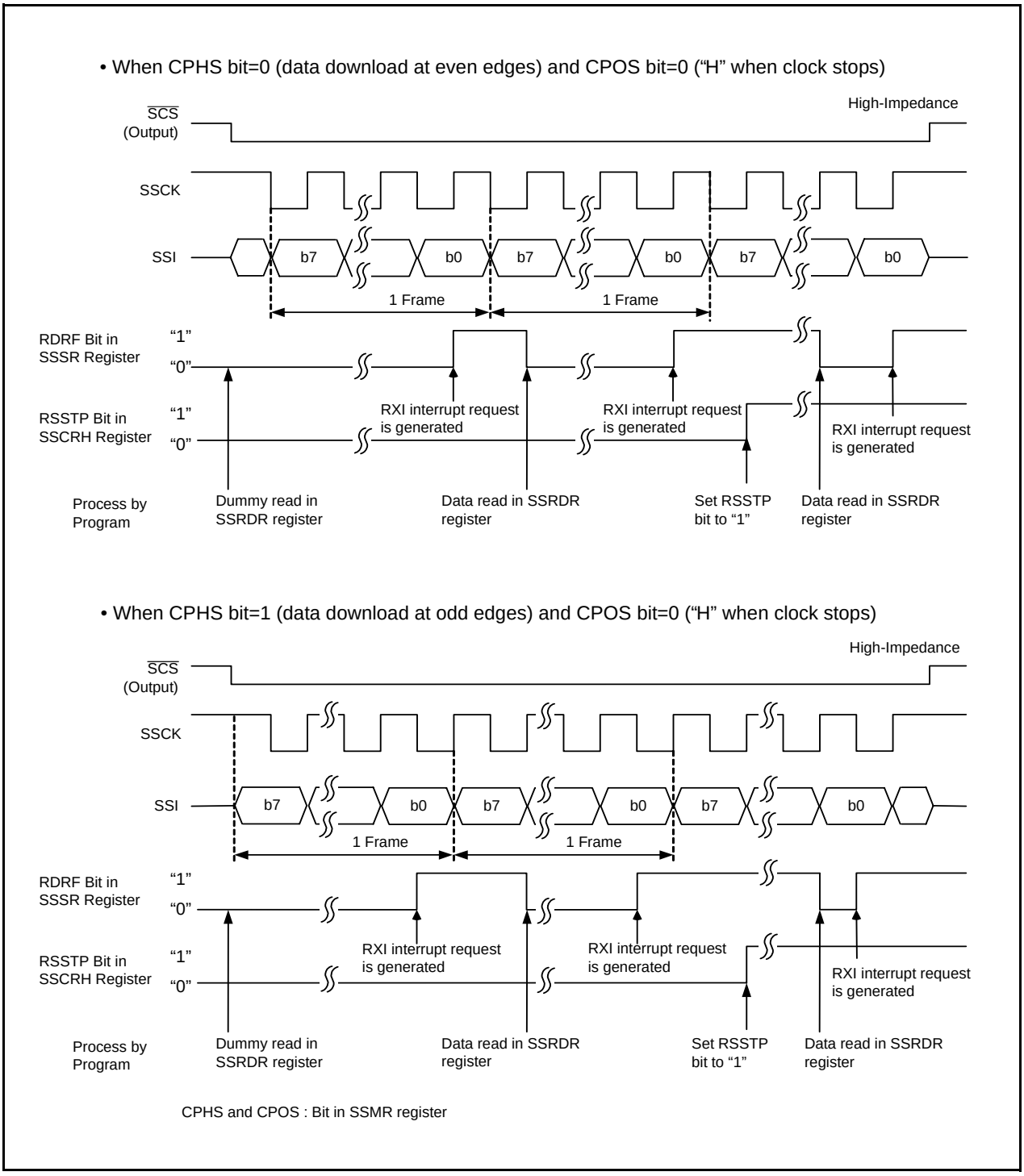

Figure 15.19 Example of Operation in Data Receive (4-Wire Bus Communication Mode)

15.6.4 $\overline{\text{SCS}}$ Pin Control and Arbitration

When setting the SSUMS bit in the SSMR2 register to “1” (4-wire bus communication mode).and the CSS1 bit in the SSMR2 register to “1” (functions as $\overline{\text{SCS}}$ output pin), Set the MSS bit in the SSCRH register to “1” (operates as a master device) and check the arbitration of the $\overline{\text{SCS}}$ pin before starting serial transfer. If the SSU detects that the synchronized internal $\overline{\text{SCS}}$ signal is held “L” in this period, the CE bit in the SSSR register to “1” (a conflict error occurs) and the MSS bit is automatically set to “0” (operates as a slave device).
Figure 15.20 shows an Arbitration Check Timing.

A future transmit operation is not performed while the CE bit is set to “1”. Set the CE bit to “0” (a conflict error does not occur) before a transmit is started.

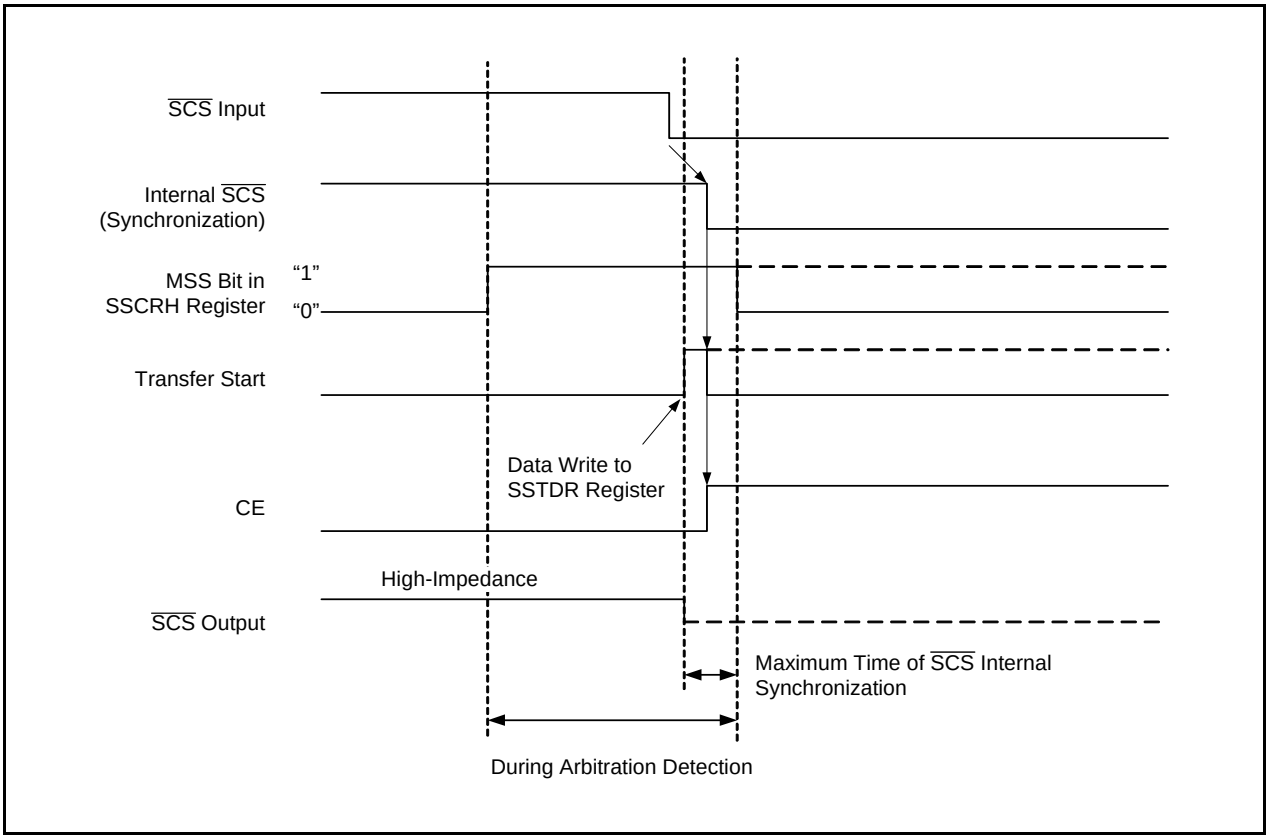

Figure 15.20 Arbitration Check Timing

16. A/D Converter

The A/D converter consists of one 10-bit successive approximation A/D converter circuit with a capacitive coupling amplifier. The analog input shares the pins with P1_0 to P1_3. Therefore, when using these pins, ensure the corresponding port direction bits are set to “0” (input mode).
When not using the A/D converter, set the VCUT bit in the ADCON1 register to “0” (Vref unconnected), so that no current will flow from the VREF pin into the resistor ladder, helping to reduce the power consumption of the chip.
The result of A/D conversion is stored in the AD register.
Table 16.1 lists the Performance of A/D converter. Figure 16.1 shows the Block Diagram of A/D Converter. Figures 16.2 and 16.3 show the A/D converter-related registers.

Table 16.1 Performance of A/D converter

Item	Performance
A/D Conversion Method	Successive approximation (with capacitive coupling amplifier)
Analog Input Voltage(1)	0V to Vref
Operating Clock ϕAD(2)	4.2V ≤ AVCC ≤ 5.5V f1, f2, f4 2.7V ≤ AVCC < 4.2V f2, f4
Resolution	8 bit or 10 bit is selectable
Absolute Accuracy	AVCC = Vref = 5V • 8-bit resolution ±2 LSB • 10-bit resolution ±3 LSB AVCC = Vref = 3.3 V • 8-bit resolution ±2 LSB • 10-bit resolution ±5 LSB
Operating Mode	One-shot and repeat modes(3)
Analog Input Pin	4 pins (AN8 to AN11)
A/D Conversion Start Condition	• Software trigger Set the ADST bit in the ADCON0 register to “1” (A/D conversion starts) • Capture Timer Z interrupt request is generated while the ADST bit is set to “1”
Conversion Rate Per Pin	• Without sample and hold function 8-bit resolution: 49ϕAD cycles, 10-bit resolution: 59ϕAD cycles • With sample and hold function 8-bit resolution: 28ϕAD cycles, 10-bit resolution: 33ϕAD cycles

NOTES:
1. Analog input voltage does not depend on use of sample and hold function.
2. The frequency of ϕAD must be 10 MHz or below.
   Without sample and hold function, the ϕAD frequency should be 250 kHz or above.
   With the sample and hold function, the ϕAD frequency should be 1 MHz or above.
3. In repeat mode, only 8-bit mode can be used.

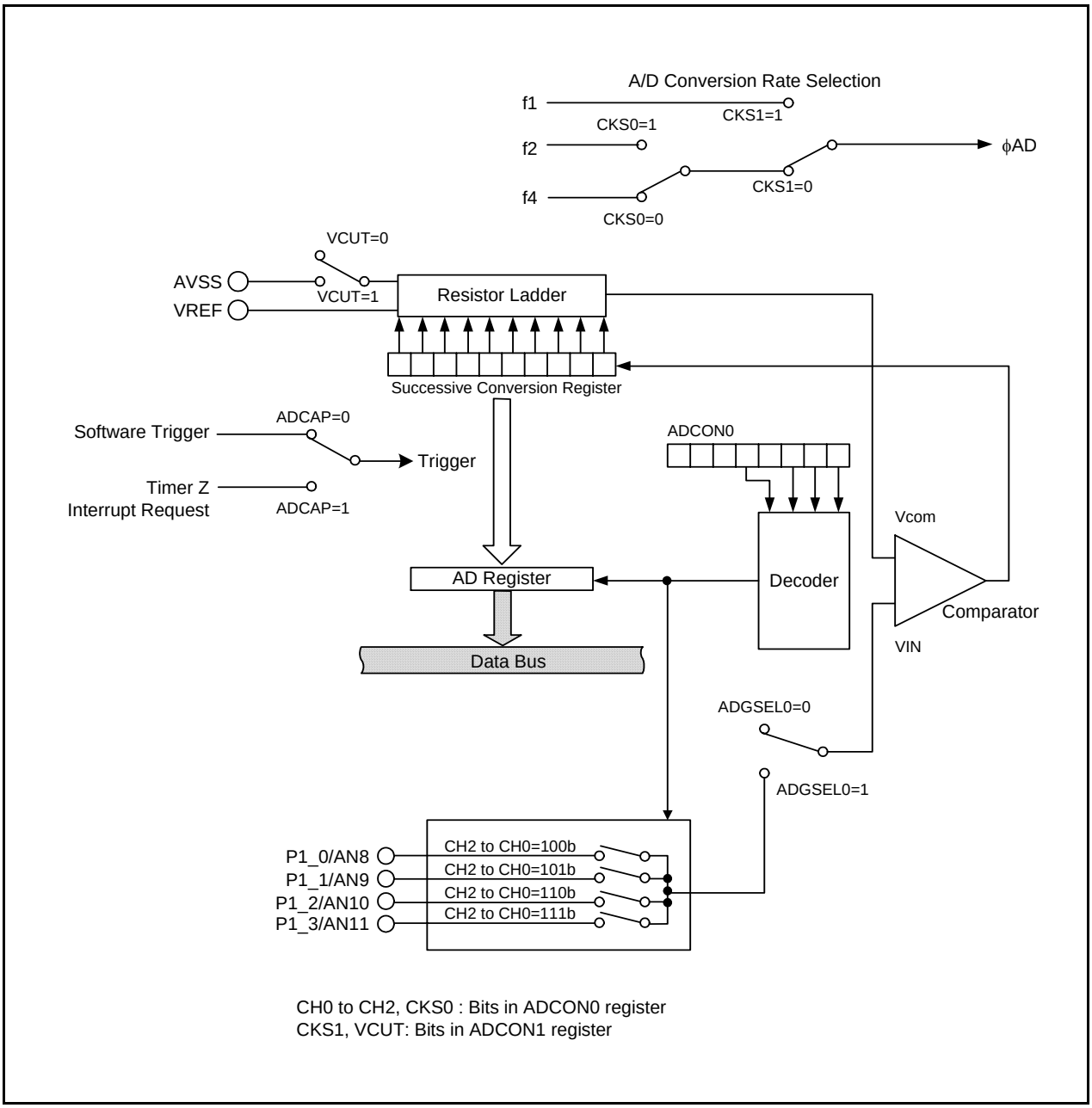

Figure 16.1 Block Diagram of A/D Converter

A/D Control Register 0[1]

b7	b6	b5	b4	b3	b2	b1	b0
			1		1		

Symbol	Address	After Reset
ADCON0	00D6h	00000XXXb

Bit Symbol	Bit Name	Function	RW
CH0	Analog Input Pin Select Bit[2]	b2 b1 b0 1 0 0 : AN8 1 0 1 : AN9 1 1 0 : AN10 1 1 1 : AN11 Other than above : Do not set	RW
CH1			RW
CH2			RW
MD	A/D Operation Mode Select Bit[3]	0 : On-shot mode 1 : Repeat mode	RW
ADGSEL0	A/D Input Group Select Bit	0 : Disabled 1 : Enabled (AN8 to AN11)	RW
ADCAP	A/D Conversion Automatic Start Bit	0 : Starts in software trigger (ADST bit) 1 : Starts in capture (Requests Timer Z interrupt)	RW
ADST	A/D Conversion Start Flag	0 : Disabes A/D conversion 1 : Starts A/D conversion	RW
CKS0	Frequency Select Bit 0	[When CKS1 in ADCON1 register = 0] 0 : Select f4 1 : Select f2 [When CKS1 in ADCON1 register = 1] 0 : Select f1[4] 1 : Do not set	RW

NOTES :

1. If the ADCON0 register is rewritten during A/D conversion, the conversion result is indeterminate.
2. CH0 to CH2 bits are enabled when the ADGSEL0 bit is set to “1”. After setting the ADGSEL0 bit to “1”, write to the CH0 to CH2 bits.
3. When changing A/D operatio mode, set the analog input pin again.
4. Set øAD frequency to 10MHz or below .

A/D Control Register 1[1]

b7	b6	b5	b4	b3	b2	b1	b0
0	0				0	0	0

Symbol	Address	After Reset
ADCON1	00D7h	00h

Bit Symbol	Bit Name	Function	RW
— (b2-b0)	Reserved Bit	Set to “0”	RW
BITS	8/10-bit Mode Select Bit[2]	0 : 8-bit mode 1 : 10-bit mode	RW
CKS1	Frequency Select Bit 1	Refer to a description of the CKS0 bit in the ADCON0 register function	RW
VCUT	Vref Connect Bit[3]	0 : Vref not connected 1 : Vref connected	RW
— (b6-b7)	Reserved Bit	Set to “0”	RW

NOTES :

1. If the ADCON1 register is rewritten during A/D conversion, the conversion result is indeterminate.
2. Set the BITS bit to “0” (8-bit mode) in repeat mode.
3. When the VCUT bit is set to “1”(connected) from “0” (not connected), wait for 1µs or more before starting A/D conversion.

Figure 16.2 ADCON0 and ADCON1 Registers

A/D Control Register 2[1]

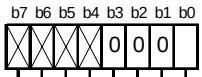

Symbol	Address	After Reset
ADCON2	00D4h	00h

Bit Symbol	Bit Name	Function	RW
SMP	A/D Conversion Method Select Bit	0 : Without sample and hold 1 : With sample and hold	RW
— (b3-b1)	Reserved Bit	Set to “0”	RW
— (b7-b4)	Nothing is assigned. When write, set to “0”. When read, its content is “0”.		—

NOTES :

1. If the ADCON2 register is rewritten during A/D conversion, the conversion result is indeterminate.

A/D Register

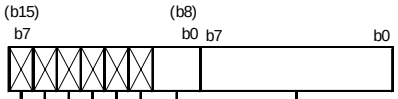

Symbol	Address	After Reset
AD	00C1h-00C0h	Indeterminate

Function		RW
When BITS bit in ADCON1 register is set to “1” (10-bit mode).	When BITS bit in ADCON1 register is set to “0” (8-bit mode).	
8 low-order bits in A/D conversion result	A/D conversion result	RO
2 high-order bits in A/D conversion result	When read, its content is indeterminate.	RO
Nothing is assigned. When write, set to “0”. When read, its content is “0”.		—

Figure 16.3 ADCON2 and AD Registers

16.1 One-Shot Mode

In one-shot mode, the input voltage on one selected pin is A/D converted once. Table 16.2 lists the Specification of One-Shot Mode. Figure 16.4 shows the ADCON0 and ADCON1 Registers in One-Shot Mode.

Table 16.2 Specification of One-Shot Mode

Item	Specification
Function	The input voltage on one selected pin by the CH2 to CH0 bits is A/D converted once
Start Condition	• When the ADCAP bit is set to “0” (software trigger), set the ADST bit to “1” (A-D conversion starts) • When the ADCAP bit is set to “1” (capture), Timer Z interrupt request is generated while the ADST bit is set to “1”
Stop Condition	• A/D conversion completes (ADST bit is set to “0”) • Set the ADST bit to “0”
Interrupt Request Generation Timing	A/D conversion completes
Input Pin	Select one of AN8 to AN11
Reading of A/D Conversion Result	Read AD register

A/D Control Register 0[1]

b7	b6	b5	b4	b3	b2	b1	b0
			1	0	1		

Symbol	Address	After Reset
ADCON0	00D6h	00000XXXb

Bit Symbol	Bit Name	Function	RW
CH0	Analog Input Pin Select Bit[2]	b2 b1 b0 1 0 0 : AN8 1 0 1 : AN9 1 1 0 : AN10 1 1 1 : AN11 Other than above : Do not set	RW
CH1			RW
CH2			RW
MD	A/D Operation Mode Select Bit[3]	0 : One-shot mode	RW
ADGSEL0	A/D Input Group Select Bit	0 : Disabled 1 : Enabled (AN8 to AN11)	RW
ADCAP	A/D Conversion Automatic Start Bit	0 : Starts in software trigger (ADST bit) 1 : Starts in capture (requests Timer Z interrupt)	RW
ADST	A/D Conversion Start Flag	0 : Disables A/D conversion 1 : Starts A/D conversion	RW
CKS0	Frequency Select Bit 0	[When CKS1 in ADCON1 register = 0] 0 : Select f4 1 : Select f2 [When CKS1 in ADCON1 register = 1] 0 : Select f1[4] 1 : Do not set	RW

NOTES :

1. If the ADCON0 register is rewritten during A/D conversion, the conversion result is indeterminate.
2. CH0 to CH2 bits are enabled when the ADGSEL0 bit is set to “1”. After setting the ADGSEL0 bit to “1”, write to the CH0 to CH2 bits.
3. When changing A/D operation mode, set the analog input pin again.
4. Set øAD frequency to 10MHz or below.

A/D Control Register 1[1]

b7	b6	b5	b4	b3	b2	b1	b0
0	0	1			0	0	0

Symbol	Address	After Reset
ADCON1	00D7h	00h

Bit Symbol	Bit Name	Function	RW
— (b2-b0)	Reserved Bit	Set to “0”	RW
BITS	8/10-bit Mode Select Bit	0 : 8-bit mode 1 : 10-bit mode	RW
CKS1	Frequency Select Bit 1	Refer to a description of the CKS0 bit in the ADCON0 register function	RW
VCUT	Vref Connect Bit[2]	1 : Vref connected	RW
— (b6-b7)	Reserved Bit	Set to “0”	RW

NOTES :

1. If the ADCON1 register is rewritten during A/D conversion, the conversion result is indeterminate.
2. When the VCUT bit is set to “1”(connected) from “0” (not connected), wait for 1µs or more before starting A/D conversion.

Figure 16.4 ADCON0 and ADCON1 Registers in One-Shot Mode

16.2 Repeat Mode

In repeat mode, the input voltage on one selected pin is A/D converted repeatedly. Table 16.3 lists the Repeat Mode Specifications. Figure 16.5 shows the ADCON0 and ADCON1 Registers in Repeat Mode.

Table 16.3 Repeat Mode Specifications

Item	Specification
Function	The Input voltage on one pin selected by CH2 to CH0 and ADGSEL0 bits is A/D converted repeatedly
Start condition	• When the ADCAP bit is set to “0” (software trigger) Set the ADST bit to “1” (A-D conversion starts) • When the ADCAP bit is set to “1” (capture) Timer Z interrupt request is generated while the ADST bit is set to “1”
Stop condition	Set the ADST bit to “0”
Interrupt request generation timing	Not generated
Input pin	Select one of AN8 to AN11
Reading of result of A/D converter	Read AD register

A/D Control Register 0[1]

b7	b6	b5	b4	b3	b2	b1	b0
			1	1	1		

Symbol	Address	After Reset
ADCON0	00D6h	00000XXXb

Bit Symbol	Bit Name	Function	RW
CH0	Analog Input Pin Select Bit[2]	b2 b1 b0 1 0 0 : AN8 1 0 1 : AN9 1 1 0 : AN10 1 1 1 : AN11 Other than above : Do not set	RW
CH1			RW
CH2			RW
MD	A/D Operating Mode Select Bit[3]	1 : Repeat mode	RW
ADGSEL0	A/D Input Group Select Bit	0 : Disabled 1 : Enabled (AN8 to AN11)	RW
ADCAP	A/D Conversion Automatic Start Bit	0 : Starts in software trigger (ADST bit) 1 : Starts in capture (requests Timer Z interrupt)	RW
ADST	A/D Conversion Start Flag	0 : Disables A/D conversion 1 : Starts A/D conversion	RW
CKS0	Frequency Select Bit 0	[When CKS1 in ADCON1 register = 0] 0 : Select f4 1 : Select f2 [When CKS1 in ADCON1 register = 1] 0 : Select f1[4] 1 : Do not set	RW

NOTES :
1. If the ADCON0 register is rewritten during A/D conversion, the conversion result is indeterminate.
2. CH0 to CH2 bits are enabled when the ADGSEL0 bit is set to “1”. After setting the ADGSEL0 bit to “1”, write to the CH0 to CH2 bits.
3. When changing A/D operating mode, set the analog input pin again.
4. Set øAD frequency to 10MHz or below.

A/D Control Register 1[1]

b7	b6	b5	b4	b3	b2	b1	b0
0	0	1		0	0	0	0

Symbol	Address	After Reset
ADCON1	00D7h	00h

Bit Symbol	Bit Name	Function	RW
— (b2-b0)	Reserved Bit	Set to “0”	RW
BITS	8/10-bit Mode Select Bit[2]	0 : 8-bit mode	RW
CKS1	Frequency Select Bit 1	Refer to a description of the CKS0 bit in the ADCON0 register function	RW
VCUT	Vref Connect Bit[3]	1 : Vref connected	RW
— (b6-b7)	Reserved Bit	Set to “0”	RW

NOTES :
1. If the ADCON1 register is rewritten during A/D conversion, the conversion result is indeterminate.
2. Set the BITS bit to “0” (8-bit mode) in repeat mode.
3. When the VCUT bit is set to “1”(connected) from “0” (not connected), wait for 1µs or more before starting A/D conversion.

Figure 16.5 ADCON0 and ADCON1 Registers in Repeat Mode

16.3 Sample and Hold

When the SMP bit in the ADCON2 register is set to “1” (with sample and hold function), A/D conversion rate per pin increases to 28ϕAD cycles for 8-bit resolution or 33ϕAD cycles for 10-bit resolution. The sample and hold function is available in all operating modes. Start the A/D conversion after selecting whether the sample and hold circuit is to be used or not.
When performing the A/D conversion, charge the comparator capacitor in the microcomputer.
Figure 16.6 shows the Timing Diagram of A/D Conversion.

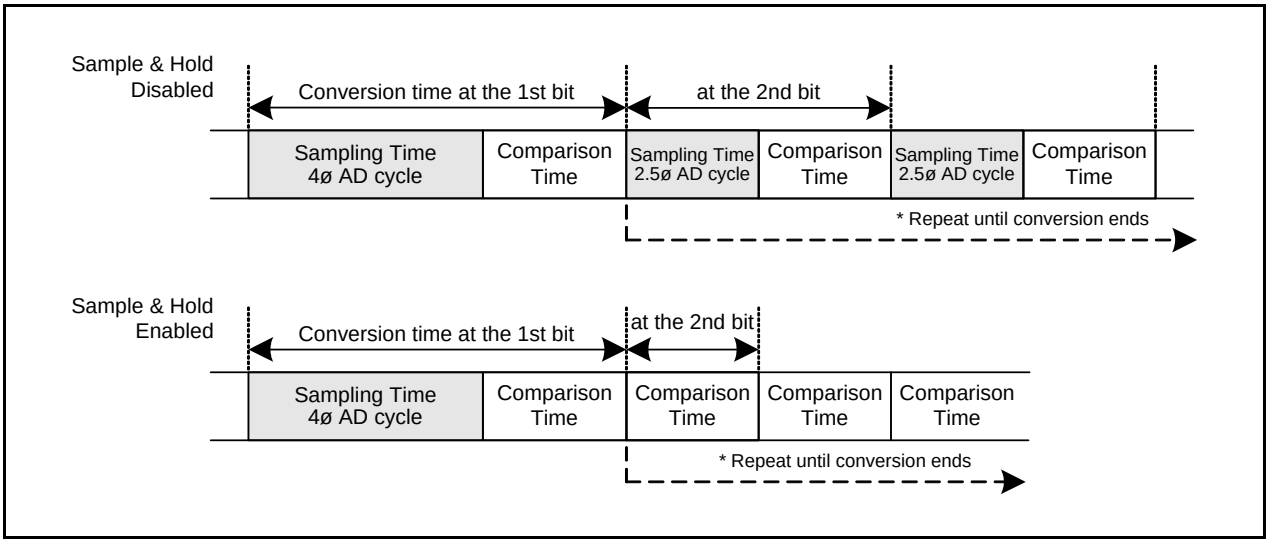

Figure 16.6 Timing Diagram of A/D Conversion

16.4 A/D Conversion Cycles

Figure 16.7 shows the A/D Conversion Cycles.

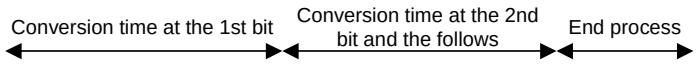

A/D Conversion Mode		Conversion Time	Sampling Time	Comparison Time	Sampling Time	Comparison Time	End process
Without Sample & Hold	8 bits	49ϕAD	4ϕAD	2.0ϕAD	2.5ϕAD	2.5ϕAD	8.0ϕAD
Without Sample & Hold	10 bits	59ϕAD	4ϕAD	2.0ϕAD	2.5ϕAD	2.5ϕAD	8.0ϕAD
With Sample & Hold	8 bits	28ϕAD	4ϕAD	2.5ϕAD	0.0ϕAD	2.5ϕAD	4.0ϕAD
With Sample & Hold	10 bits	33ϕAD	4ϕAD	2.5ϕAD	0.0ϕAD	2.5ϕAD	4.0ϕAD

Figure 16.7 A/D Conversion Cycles

16.5 Internal Equivalent Circuit of Analog Input

Figure 16.8 shows the Internal Equivalent Circuit of Analog Input.

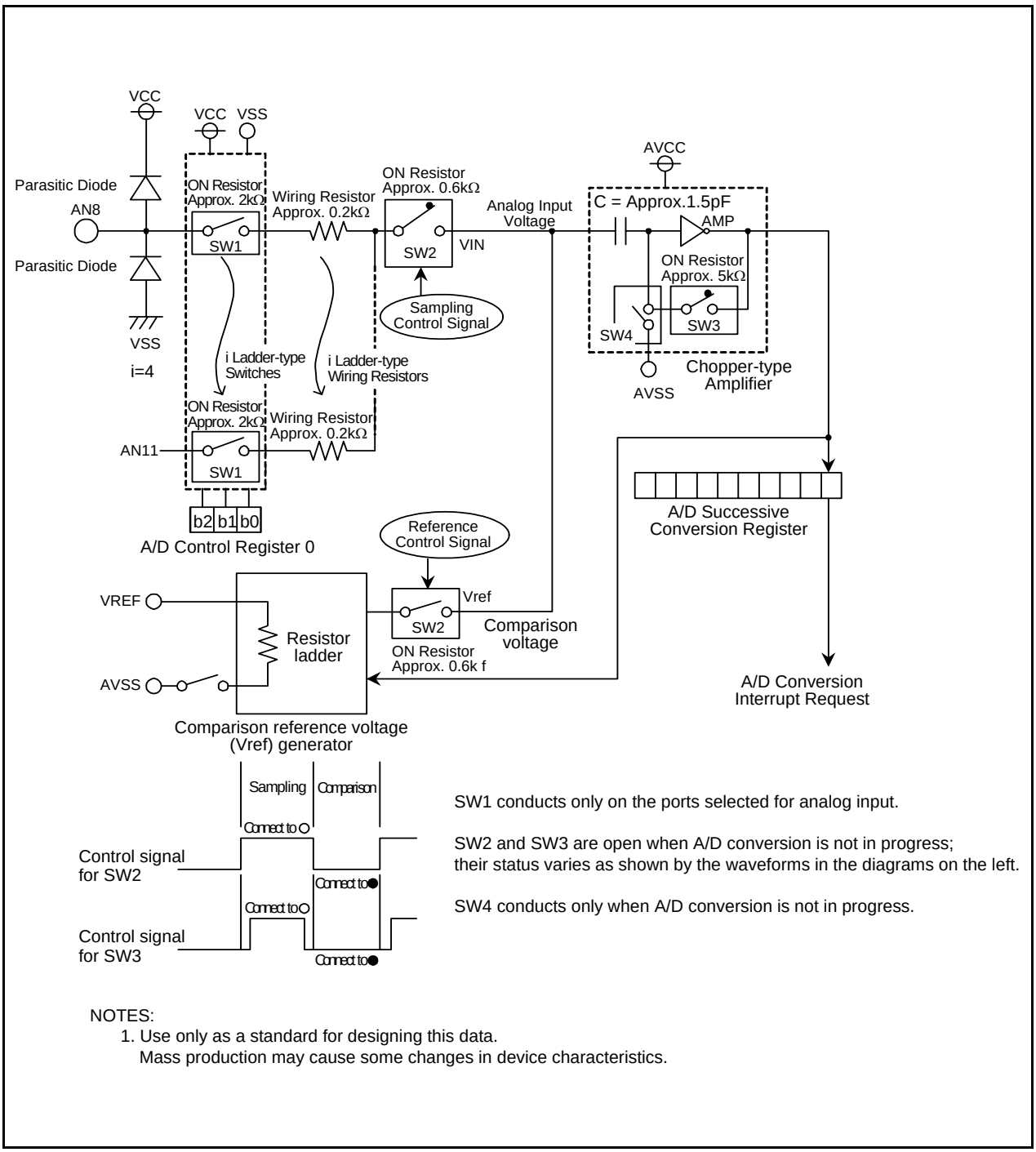

NOTES:
1. Use only as a standard for designing this data.
   Mass production may cause some changes in device characteristics.

Figure 16.8 Internal Equivalent Circuit of Analog Input

16.6 Inflow Current Bypass Circuit

Figure 16.9 shows the Configuration of the Inflow Current Bypass Circuit, Figure 16.10 shows the Example of an Inflow Current Bypass Circuit where VCC or More is Applied.

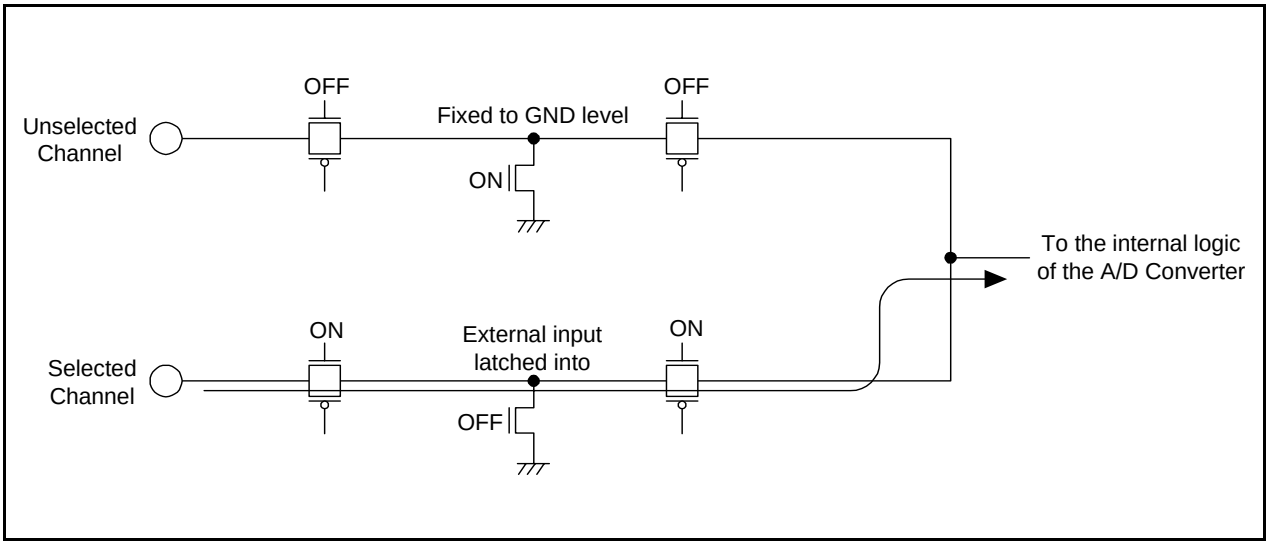

Figure 16.9 Configuration of the Inflow Current Bypass Circuit

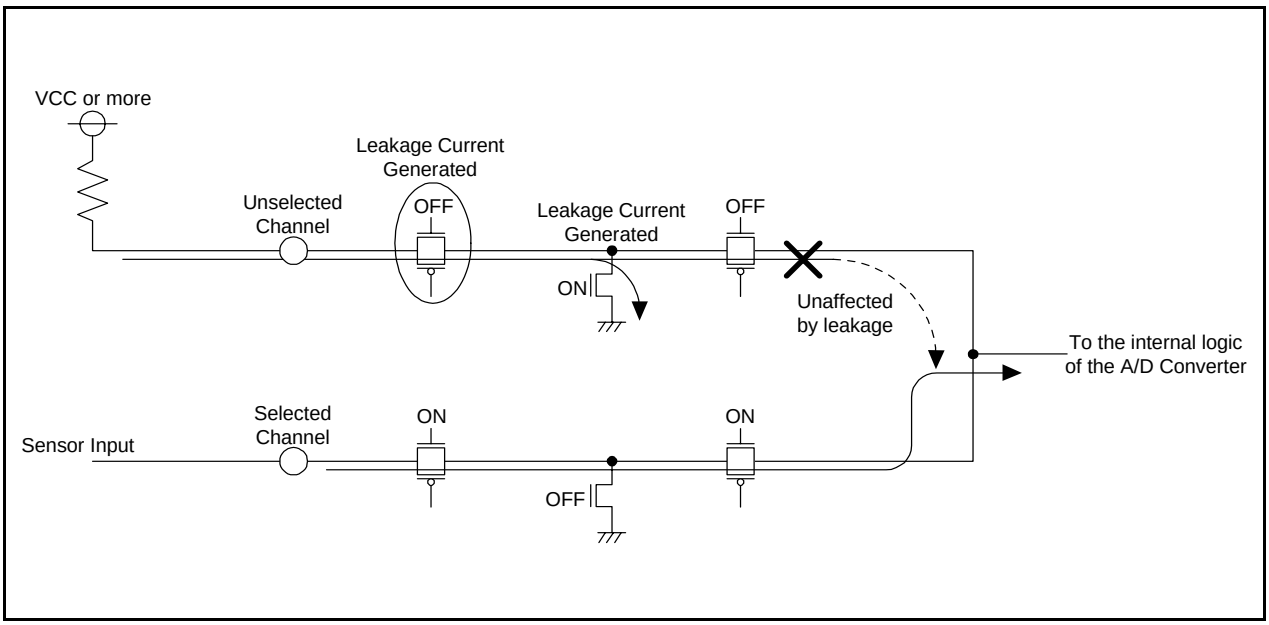

Figure 16.10 Example of an Inflow Current Bypass Circuit where VCC or More is Applied

17. Programmable I/O Ports

Programmable Input/Output ports (hereafter referred to as “I/O ports”) have 13 ports of the P1, P3_3 to P3_5, P3_7, and P4_5. Also, the main clock oscillation circuit is not used, the P4_6 and P4_7 can be used as the input port only. Table 17.1 lists the Overview of Programmable I/O Ports.

Table 17.1 Overview of Programmable I/O Ports

Ports	I/O	Output Form	I/O Setting	Internal Pull-Up Resistor	Drive Capacity Selection
P1	I/O	CMOS3 State	Set every bit	Set every 4 bits(1)	Set every bit(2) of P1_0 to P1_3
P3_3, P4_5	I/O	CMOS3 State	Set every bit	Set every bit(1)	None
P3_4, P3_5, P3_7	I/O	CMOS3 State	Set every bit	Set every 3 bits(1)	None
P4_6, P4_7(3)	I	(Without output function)	None	None	None

NOTES:
1. In input mode, whether the internal pull-up resistor is connected or not can be selected by the PUR0 and PUR1 registers.
2. This port can be used as the LED drive port by setting the DRR register to “1” (High).
3. When the main clock oscillation circuit is not used, these ports can be used as the input port only.

17.1 Functions of Programmable I/O Ports

The PDi_j (j=0 to 7) bit in the PDi (i=1,3 and 4) register controls I/O of the ports P1, P3_3 to P3_5, P3_7 and P4_5. The Pi register consists of a port latch to hold output data and a circuit to read pin state. Figures 17.1 to 17.3 show the Configurations of Programmable I/O Ports.
Table 17.2 lists the Functions of Programmable I/O Ports. Also, Figure 17.5 shows the PD1, PD3 and PD4 Registers. Figure 17.6 shows the P1, P3 and P4 Registers, Figure 17.7 shows the PUR0 and PUR1 Registers and Figure 17.8 shows the DRR Register.

Table 17.2 Functions of Programmable I/O Ports

Operation When Accessing Pi Register	Value of PDi_j Bit in PDi Register(1)	
	When PDi_j bit is set to “0” (input mode)	When PDi_j bit is set to “1” (output mode)
Reading	Read pin input level	Read the port latch
Writing	Write to the port latch	Write to the port latch. The value written in the port latch, it is output from the pin.

NOTES:
1. Nothing is assigned to the PD3_0 to PD3_2, PD3_6, PD4_0 to PD4_4, PD4_6 and PD4_7 bits.

17.2 Effect on Peripheral Functions

Programmable I/O ports function as I/O of peripheral functions (Refer to **Table 1.6** Pin Name Information by Pin Number). Table 17.3 lists the Setting of PDi_j Bit When Functioning as I/O of Peripheral Functions. Refer to descriptions of each function for how to set peripheral functions.

Table 17.3 Setting of PDi_j Bit When Functioning as I/O of Peripheral Functions

I/O of Peripheral Functions	PDi_j Bit Setting of Port shared with Pin
Input	Set this bit to “0” (input mode).
Output	This bit can be set to both “0” and “1” (output regardless of the port setting)

17.3 Pins Other than Programmable I/O Ports

Figure 17.4 shows the Configuration of I/O Pins.

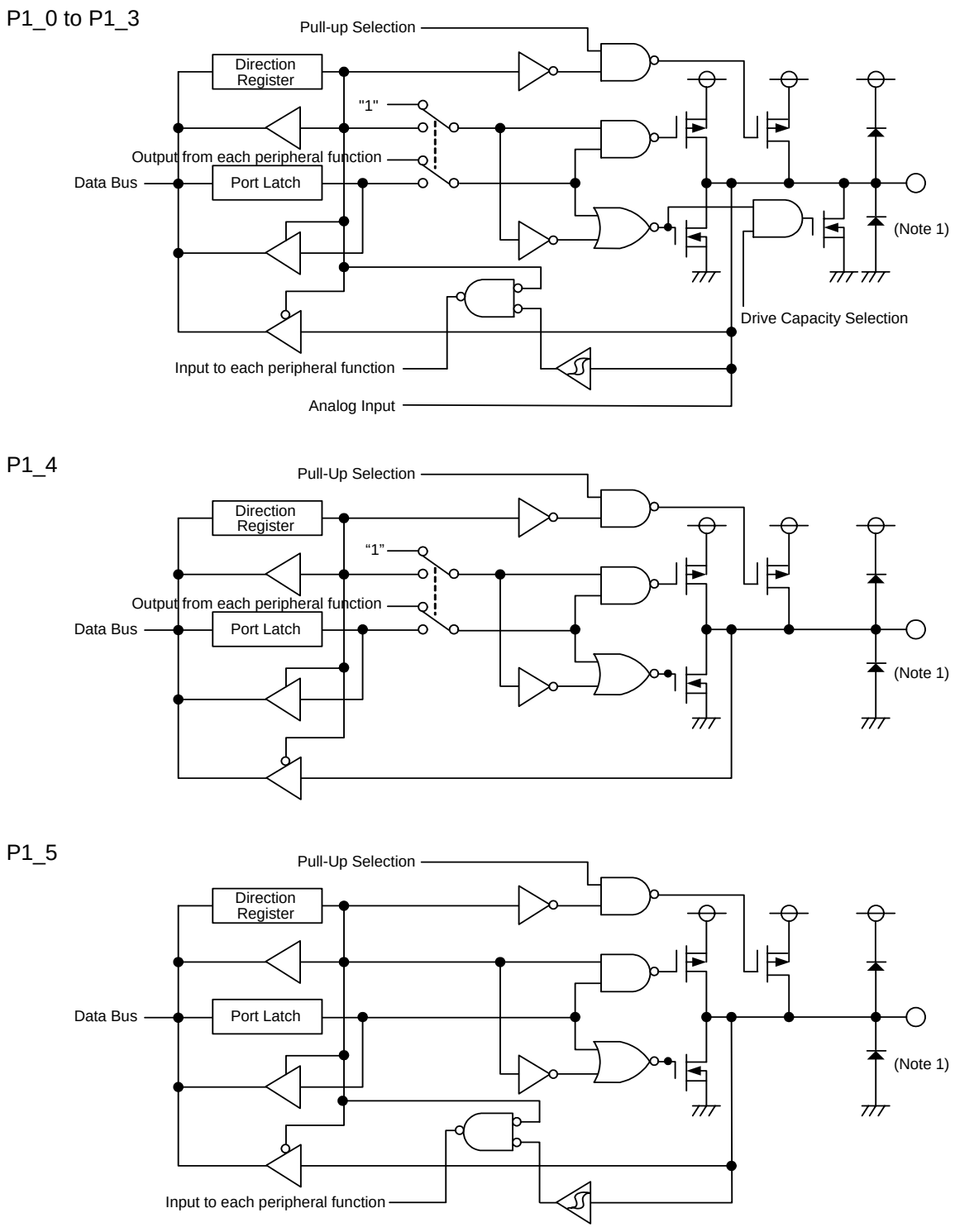

NOTES :
1. symbolizes a parasitic diode.
Ensure the input voltage on each port will not exceed VCC.

Figure 17.1 Configuration of Programmable I/O Ports (1)

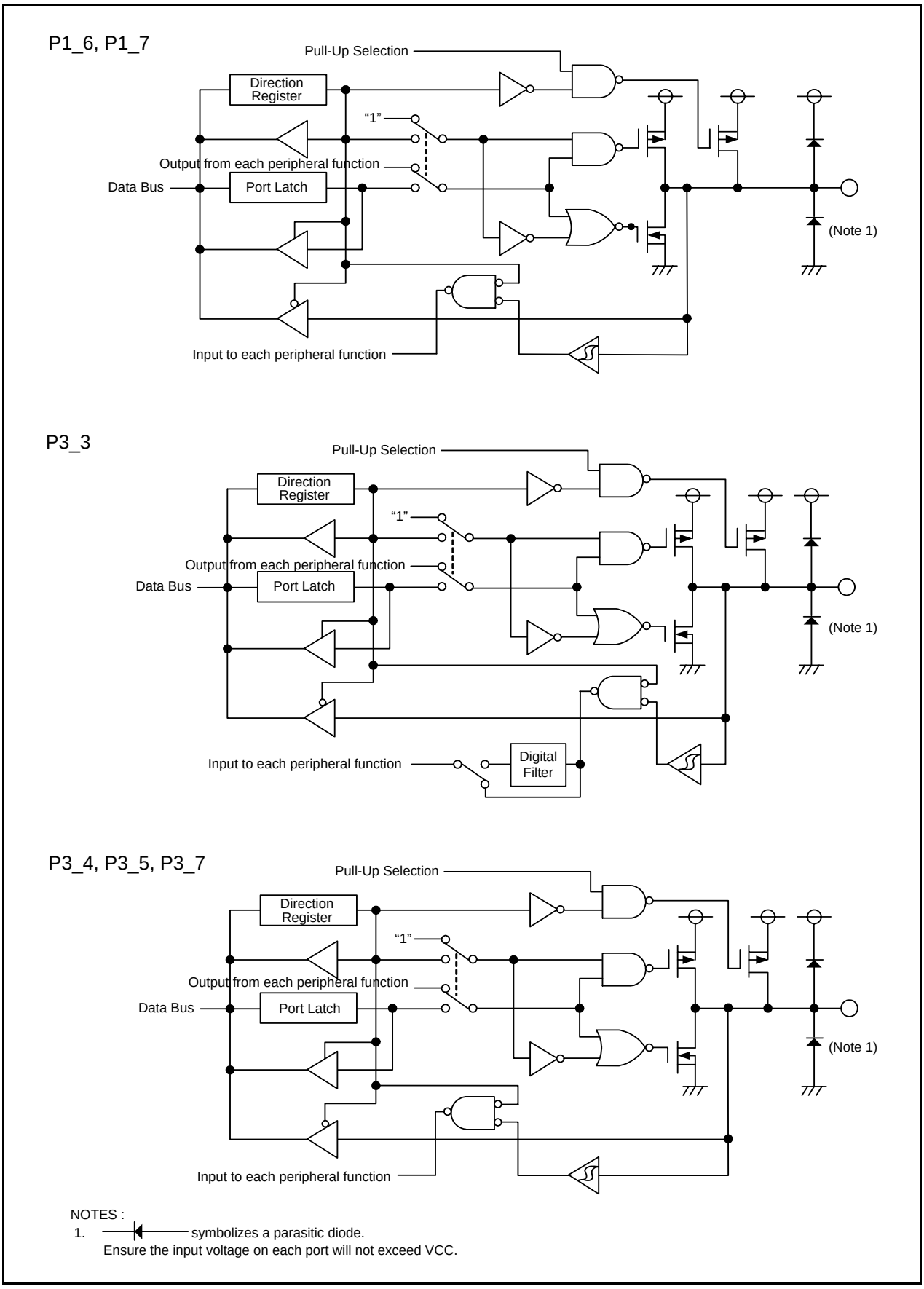

NOTES :
1. symbolizes a parasitic diode.
Ensure the input voltage on each port will not exceed VCC.

Figure 17.2 Configuration of Programmable I/O Ports (2)

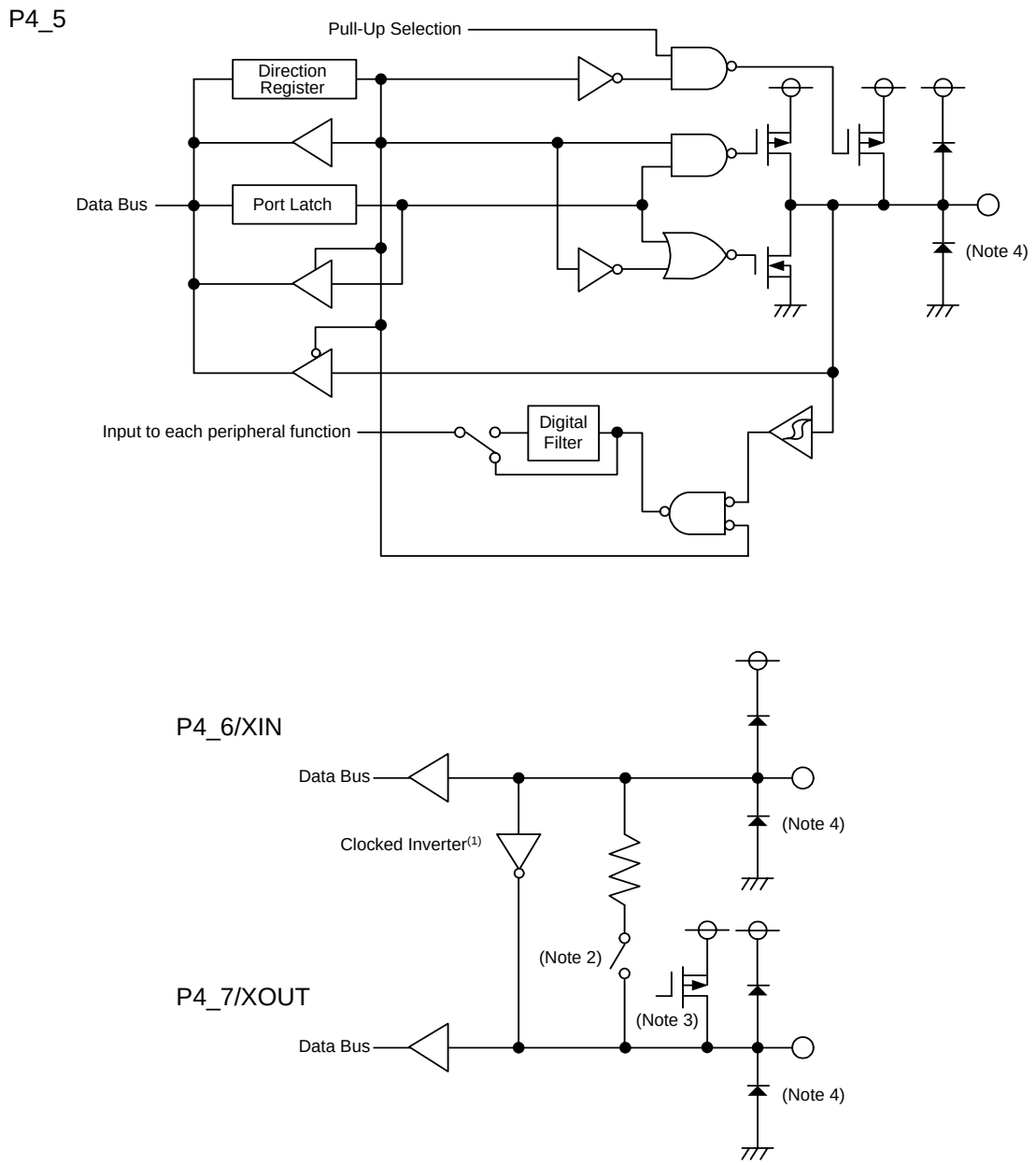

NOTES:
1. When CM05=1, CM10=1, or CM13=0, the clocked inverter is cutoff.
2. When CM10=1 or CM13=0, the feedback resistor is unconnected.
3. When CM05=CM13=1 or CM10=CM13=1, this pin is pulled up.
4. ⊣◀ symbolizes a parasitic diode.
Ensure the input voltage on each port will not exceed VCC.

Figure 17.3 Configuration of Programmable I/O Ports (3)

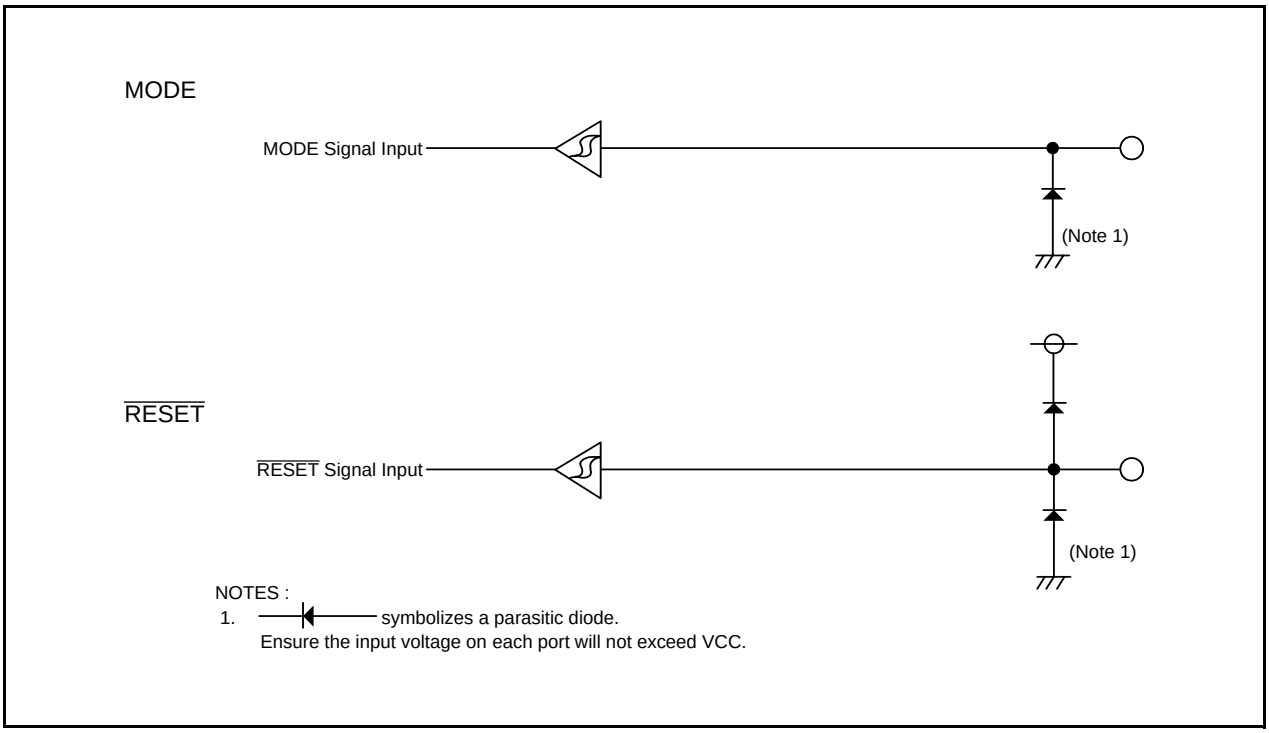

Figure 17.4 Configuration of I/O Pins

Port Pi Direction Register (i=1, 3, 4)[1, 2]

b7 b6 b5 b4 b3 b2 b1 b0

Symbol	Address	After Reset
PD1	00E3h	00h
PD3	00E7h	00h
PD4	00EAh	00h

Bit Symbol	Bit Name	Function	RW
PDi_0	Port Pi0 Direction Bit	0 : Input mode (Functions as an input port) 1 : Output mode (Functions as an output port)	RW
PDi_1	Port Pi1 Direction Bit		RW
PDi_2	Port Pi2 Direction Bit		RW
PDi_3	Port Pi3 Direction Bit		RW
PDi_4	Port Pi4 Direction Bit		RW
PDi_5	Port Pi5 Direction Bit		RW
PDi_6	Port Pi6 Direction Bit		RW
PDi_7	Port Pi7 Direction Bit		RW

NOTES :

1. Bits PD3_0 to PD3_2 and PD3_6 in the PD3 register are unavailable on this MCU. If it is necessary to set bits PD3_0 to PD3_2 and PD3_6, set to “0” (input mode). When read, the content is “0”.
2. Bits PD4_0 to PD4_4, PD4_6 and PD4_7 in the PD4 register are unavailable on this MCU. If it is necessary to set bits PD4_0 to PD4_4, PD4_6 and PD4_7, set to “0” (input mode). When read, the content is “0”.

Figure 17.5 PD1, PD3 and PD4 Registers

Port Pi Register (i=1, 3, 4)[1, 2]

b7 b6 b5 b4 b3 b2 b1 b0

Symbol	Address	After Reset
P1	00E1h	Indeterminate
P3	00E5h	Indeterminate
P4	00E8h	Indeterminate

Bit Symbol	Bit Name	Function	RW
Pi_0	Port Pi0 Bit	The pin level on any I/O port which is set for input mode can be read by reading the corresponding bit in this register. The pin level on any I/O port which is set for output mode can be controlled by writing to the corresponding bit in this register. 0 : “L” level 1 : “H” level[1]	RW
Pi_1	Port Pi1 Bit		RW
Pi_2	Port Pi2 Bit		RW
Pi_3	Port Pi3 Bit		RW
Pi_4	Port Pi4 Bit		RW
Pi_5	Port Pi5 Bit		RW
Pi_6	Port Pi6 Bit		RW
Pi_7	Port Pi7 Bit		RW

NOTES :

1. Bits P3_0 to P3_2 and P3_6 in the P3 register are unavailable on this MCU. If it is necessary to set bits P3_0 to P3_2 and P3_6, set to “0” (“L” level). When read, the content is “0”.
2. Bits P4_0 to P4_4 in the P4 register are unavailable on this MCU. If it is necessary to set bits P4_0 to P4_4, set to “0” (“L” level). When read, the content is “0”.

Figure 17.6 P1, P3 and P4 Registers

Pull-Up Control Register 0

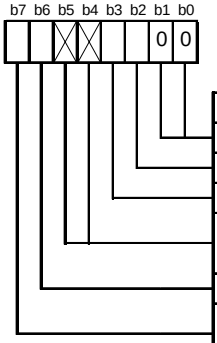

Symbol	Address	After Reset
PUR0	00FCh	00XX0000b

Bit Symbol	Bit Name	Function	RW
(b1-b0)	Reserved Bit	Set to “0”	RW
PU02	P1_0 to P1_3 pull-up(1)	0 : Not pulled up 1 : Pulled up	RW
PU03	P1_4 to P1_7 pull-up(1)		RW
— (b5-b4)	Nothing is assigned. When w rite, set to “0”. When read, its content is indeterminate.		—
PU06	P3_3 pull-up(1)	0 : Not pulled up 1 : Pulled up	RW
PU07	P3_4 to P3_5 and P3_7 pll-up(1)		RW

NOTES :

1. When this bit is set to “1” (pulled up), the pin w hose direct bit is set to “0” (input mode) is pulled up.

Pull-up Control Register 1

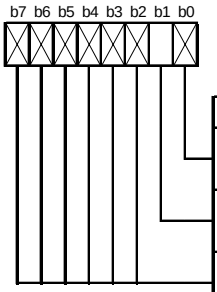

Symbol	Address	After Reset
PUR1	00FDh	XXXXXX0Xb

Bit Symbol	Bit Name	Function	RW
— (b0)	Nothing is assigned. When w rite, set to “0”. When read, its content is indeterminate.		—
PU11	P4_5 pull-up(1)	0 : Not pulled up 1 : Pulled up	RW
— (b7-b2)	Nothing is assigned. When w rite, set to “0”. When read, its content is indeterminate.		—

NOTES :

1. When the PU11 bit is set to “1” (pulled up) and the PD4_5 bit is set to “0” (input mode), the P4_5 pin is pulled up.

Figure 17.7 PUR0 and PUR1 Registers

Port P1 Drive Capacity Control Register

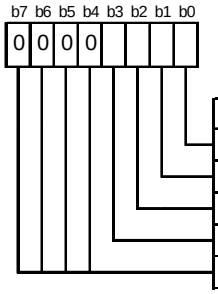

Symbol	Address	After Reset
DRR	00FEh	00h

Bit Symbol	Bit Name	Function	RW
DRR0	P1_0 Drive Capacity	Set P1 N-channel output transistor drive capacity 0 : Low 1 : High	RW
DRR1	P1_1 Drive Capacity		RW
DRR2	P1_2 Drive Capacity		RW
DRR3	P1_3 Drive Capacity		RW
(b7-b4)	Reserved Bit	Set to “0”	RW

Figure 17.8 DRR Register

17.4 Port setting

Table 17.4 to Table 17.17 list the port setting.

Table 17.4 Port P1_0/$\overline{\text{KI0}}$/AN8/CMP0_0 Setting

Register	PD1	PUR0	DRR	KIEN	ADCON0	TCOUT	Function
Bit	PD1_0	PU02	DRR0	KI0EN	CH2, CH1, CH0, ADGSEL0	TCOUT0	
Setting Value	0	0	X	X	XXXXb	0	Input port (not pulled up)
	0	1	X	X	XXXXb	0	Input port (pulled up)
	0	0	X	1	XXXXb	0	$\overline{\text{KI0}}$ input
	0	0	X	X	1001b	0	A/D Converter input (AN8)
	1	X	0	X	XXXXb	0	Output port
	1	X	1	X	XXXXb	0	Output port (High drive)
	X	X	X	X	XXXXb	1	CMP0_0 output

X: “0” or “1”

Table 17.5 Port P1_1/$\overline{\text{KI1}}$/AN9/CMP0_1 Setting

Register	PD1	PUR0	DRR	KIEN	ADCON0	TCOUT	Function
Bit	PD1_1	PU02	DRR1	KI1EN	CH2, CH1, CH0, ADGSEL0	TCOUT1	
Setting Value	0	0	X	X	XXXXb	0	Input port (not pulled up)
	0	1	X	X	XXXXb	0	Input port (pulled up)
	0	0	X	1	XXXXb	0	$\overline{\text{KI1}}$ input
	0	0	X	X	1011b	0	A/D Converter input (AN9)
	1	X	0	X	XXXXb	0	Output port
	1	X	1	X	XXXXb	0	Output port (High drive)
	X	X	X	X	XXXXb	1	CMP0_1 output

X: “0” or “1”

Table 17.6 Port P1_2/$\overline{\text{KI2}}$/AN10/CMP0_2 Setting

Register	PD1	PUR0	DRR	KIEN	ADCON0	TCOUT	Function
Bit	PD1_2	PU02	DRR2	KI2EN	CH2, CH1, CH0, ADGSEL0	TCOUT2	
Setting Value	0	0	X	X	XXXXb	0	Input port (not pulled up)
	0	1	X	X	XXXXb	0	Input port (pulled up)
	0	0	X	1	XXXXb	0	$\overline{\text{KI2}}$ input
	0	0	X	X	1101b	0	A/D Converter input (AN10)
	1	X	0	X	XXXXb	0	Output port
	1	X	1	X	XXXXb	0	Output port (High drive)
	X	X	X	X	XXXXb	1	CMP0_2 input

X: “0” or “1”

Table 17.7 Port P1_3/$\overline{\text{KI3}}$/AN11/TZOUT Setting

Register	PD1	PUR0	DRR	KIEN	ADCON0	TZMR	TZOC	Function
Bit	PD1_3	PU02	DRR3	KI3EN	CH2, CH1, CH0, ADGSEL0	TZMOD1, TZMOD0	TZOCNT	
Setting Value	0	0	X	X	XXXXb	00b	X	Input port (not pulled up)
	0	1	X	X	XXXXb	00b	X	Input port (pulled up)
	0	0	X	1	XXXXb	00b	X	$\overline{\text{KI3}}$ input
	0	0	X	X	1111b	00b	X	A/D Converter input (AN11)
	1	X	0	X	XXXXb	00b	X	Output port
	1	X	1	X	XXXXb	00b	X	Output port (High drive)
	X	X	0	X	XXXXb	01b	1	Output port
	X	X	1	X	XXXXb	01b	1	Output port (High drive)
	X	X	X	X	XXXXb	01b	0	TZOUT output
	X	X	X	X	XXXXb	1Xb	X	TZOUT output

X: “0” or “1”

Table 17.8 Port P1_4/TXD0 Setting

Register	PD1	PUR0	U0MR	U0C0	Function
Bit	PD1_4	PU03	SMD2, SMD1, SMD0	NCH	
Setting Value	0	0	000b	X	Input port (not pulled up)
	0	1	000b	X	Input port (pulled up)
	1	X	000b	X	Output port
	X	X	001b	0	TXD0 output, CMOS output
			100b		
			101b		
			110b		
	X	X	001b	1	TXD0 output, N-channel open output
			100b		
			101b		
			110b		

X: “0” or “1”

Table 17.9 Port P1_5/RXD0/CNTR01/$\overline{\text{INT11}}$ Setting

Register	PD1	PUR0	UCON	TXMR	Function
Bit	PD1_5	PU03	CNTRSEL	TXMOD1, TXMOD0	
Setting Value	0	0	X	XXb	Input port (not pulled up)
	0	1	X	XXb	Input port (pulled up)
	0	X	X	Other than 01b	RXD0 input
	0	X	1	Other than 01b	CNTR01/$\overline{\text{INT11}}$ input
	1	X	X	Other than 01b	Output port
	1	X	1	Other than 01b	CNTR01 output

Table 17.10 Port P1_6/CLK0/SSI Setting

Register	PD1	PUR0	U0MR	Function
Bit	PD1_6	PU03	SMD2, SMD1, SMD0, CKDIR	
Setting Value	0	0	Other than 0X10b	Input port (not pulled up)
	0	1	Other than 0X10b	Input port (pulled up)
	0	0	XXX1b	CLK0 (external clock) input
	1	X	Other than 0X10b	Output port
	X	X	0X10b	CLK0 (internal clock) output

X: “0” or “1”

Table 17.11 Port P1_7/CNTR00/$\overline{\text{INT10}}$ Setting

Register	PD1	PUR0	TXMR	UCON	Function
Bit	PD1_7	PU03	TXMOD1, TXMOD0	CNTRSEL	
Setting Value	0	0	Other than 01b	X	Input port (not pulled up)
	0	1	Other than 01b	X	Input port (pulled up)
	0	0	Other than 01b	0	CNTR00/$\overline{\text{INT10}}$ input
	1	X	Other than 01b	X	Output port
	X	X	Other than 01b	0	CNTR00 output

X: “0” or “1”

Table 17.12 Port P3_3/TCIN/$\overline{\text{INT3}}$/SSI/CMP1_0 Setting

Register	PD3	PUR0	SSU (Refer to **Table 15.3** Association between Communication Modes and I/O Pins)		TCOUT	Function
Bit	PD3_3	PU06	SSI Output Control	SSI Input Control	TCOUT3	
Setting Value	0	0	0	0	0	Input port (not pulled up)
	0	1	0	0	0	Input port (pulled up)
	X	0	0	1	X	SSI input
	1	X	0	0	0	Output port
	X	X	0	0	1	CMP1_0 output
	X	X	1	0	X	SSI output
	0	X	1	1	0	TCIN input/$\overline{\text{INT3}}$

X: “0” or “1”

Table 17.13 Port P3_4/$\overline{\text{SCS}}$/CMP1_1 Setting

Register	PD3	PUR0	SSU (Refer to **Table 15.3** Association between Communication Modes and I/O Pins)		TCOUT	Function
Bit	PD3_4	PU07	$\overline{\text{SCS}}$ Output Control	$\overline{\text{SCS}}$ Input Control	TCOUT4	
Setting Value	0	0	0	0	0	Input port (not pulled up)
	0	1	0	0	0	Input port (pulled up)
	0	0	0	1	0	$\overline{\text{SCS}}$ input
	1	X	0	0	0	Output port
	X	X	0	0	1	CMP1_1 output
	X	X	1	0	X	$\overline{\text{SCS}}$ output

X: “0” or “1”

Table 17.14 Port P3_5/SSCK/CMP1_2 Setting

Register	PD3	PUR0	SSU (Refer to **Table 15.3** Association between Communication Modes and I/O Pins)		TCOUT	Function
Bit	PD3_5	PU07	SSCK Output Control	SSCK Input Control	TCOUT5	
Setting Value	0	0	0	0	0	Input port (not pulled up)
	0	1	0	0	0	Input port (pulled up)
	0	0	0	1	0	SSCK input
	1	X	0	0	0	Output port
	X	X	0	0	1	CMP1_2 output
	X	X	1	0	X	SSCK output

X: “0” or “1”

Table 17.15 Port P3_7/$\overline{\text{CNTR0}}$/SSO Setting

Register	PD3	PUR0	SSU (Refer to **Table 15.3** Association between Communication Modes and I/O Pins)		TXMR	UCON	Function
Bit	PD3_7	PU07	SSO Output Control	SSO Input Control	TXOCNT	U1SEL1, U1SEL0	
Setting Value	0	0	0	0	0	0Xb	Input port (not pulled up)
	0	1	0	0	0	0Xb	Input port (pulled up)
	1	X	0	0	0	0Xb	Output port
	X	X	0	0	1	XXb	$\overline{\text{CNTR0}}$ output pin
	X	X	0	1	X	XXb	SSO input pin
	X	X	1	0	X	XXb	SSO output pin

X: “0” or “1”

Table 17.16 Port XIN/P4_6, XOUT/P4_7 Setting

Register	CM1	CM1	CM0	Circuit Specification		Function
Bit	CM13	CM10	CM05	Oscillation Buffer	Feedback Resistance	
Setting Value	1	1	1	OFF	OFF	XIN-XOUT oscillation stop
	1	0	1	OFF	ON	External input to XIN pin, “H” output from XOUT pin
	1	0	1	OFF	ON	XIN-XOUT oscillation stop
	1	0	0	ON	ON	XIN-XOUT oscillation
	0	X	X	OFF	OFF	Input port

X: “0” or “1”

Table 17.17 Port P4_5/$\overline{\text{INT0}}$ Setting

Register	PD4	PUR1	INTEN	Function
Bit	PD4_5	PU11	INT0EN	
Setting Value	0	0	0	Input port (not pulled up)
	0	1	0	Input port (pulled up)
	0	0	1	$\overline{\text{INT0}}$ input
	1	X	X	Output port

X: “0” or “1”

17.5 Unassigned Pin Handling

Table 17.18 lists the Unassigned Pin Handling. Figure 17.9 show the Unassigned Pin Handling.

Table 17.18 Unassigned Pin Handling

Pin Name	Connection
Ports P1, P3_3 to P3_5, P3_7, P4_5	• After setting to input mode, connect every pin to VSS via a resistor (pull-down) or connect every pin to VCC via a resistor (pull-up).(2) • After setting to output mode, leave these pins open.(1, 2)
Ports P4_6, P4_7	Connect to VCC via a resistor (pull-up)(2)
AVCC, VREF	Connect to VCC
$\overline{\text{RESET}}$ (3)	Connect to VCC via a resistor (pull-up)(2)

NOTES:

1. When setting these ports to output mode and leaving them open, they remain input mode until they are switched to output mode by a program. The voltage level of these pins may be indeterminate and the power current may increase while the ports remain input mode.
   The content of the direction registers may change due to noise or out of control caused by noise. In order to enhance program reliability, set the direction registers periodically by a program.
2. Connect these unassigned pins to the microcomputer using the shortest wire length (within 2 cm) as possible.
3. When power-on reset function is used.

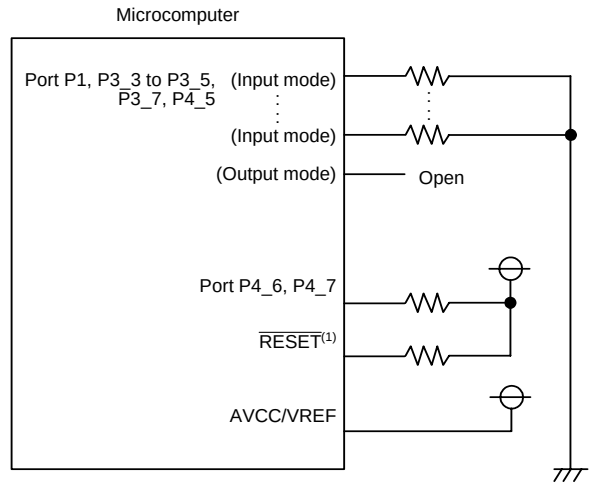

NOTES:
1. When power-on reset function is used.

Figure 17.9 Unassigned Pin Handling

18. Flash Memory Version

18.1 Overview

In the flash memory version, rewrite operations to the flash memory can be performed in three modes; CPU rewrite, standard serial I/O, parallel I/O modes.
Table 18.1 lists the Flash Memory Version Performance (see **Table 1.1** Performance Outline of the R8C/14 Group and **Table 1.2** Performance Outline of the R8C/15 Group for the items not listed on Table 18.1).

Table 18.1 Flash Memory Version Performance

Item		Specification
Flash Memory Operating Mode		3 modes (CPU rewrite, standard serial I/O, and parallel I/O mode)
Division of Erase Block		See **Figure 18.1** and **Figure 18.2**
Program Method		Byte unit
Erase Method		Block erase
Program, Erase Control Method		Program and erase control by software command
Rewrite Control Method		Rewrite control for Block 0 and 1 by FMR02 bit in FMR0 register
		Rewrite control for Block 0 by FMR16 bit and Block 1 by FMR16 bit
Number of Commands		5 commands
Program and Erase Endurance(1)	Block0 and 1 (Program ROM)	R8C/14 Group : 100 times ; R8C/15 Group : 1,000 times
	BlockA and B (Data flash)(2)	10,000 times
ID Code Check Function		Standard serial I/O mode supported
ROM Code Protect		For parallel I/O mode supported

NOTES:

1. Definition of program and erase endurance.
   The program and erase endurance is defined to be per-block. When the program and erase endurance is n times (n=100 or 10,000 times), to erase n times per block is possible. For example, if performing one-byte write to the distinct addresses on Block A of 1K-byte block 1,024 times and then erasing that block, the program and erase endurance is counted as one time. If rewriting more than 100 times, execute the program until the blank areas are all used to reduce the substantial rewrite endurance and then erase. Do not rewrite only particular blocks and rewrite to average the program and erase endurance to each block. Also keep the erase endurance as information and set up the limit endurance.
2. Blocks A and B are embedded only in the R8C/15 group.

Table 18.2 Flash Memory Rewrite Modes

Flash Memory Rewrite mode	CPU Rewrite Mode	Standard Serial I/O Mode	Parallel I/O mode
Function	User ROM area is rewritten by executing software commands from the CPU. EW0 mode: Rewritable in any area other than flash memory EW1 mode: Rewritable in flash memory	User ROM area is rewritten by using a dedicated serial programmer.	User ROM area is rewritten by using a dedicated parallel programmer.
Areas which can be rewritten	User ROM area	User ROM area	User ROM area
Operating Mode	Single chip mode	Boot mode	Parallel I/O mode
ROM Programmer	None	Serial programmer	Parallel programmer

18.2 Memory Map

The flash memory contains a user ROM area and a boot ROM area (reserved area). Figure 18.1 shows the Flash Memory Block Diagram for R8C/14 Group. Figure 18.2 shows the Flash Memory Block Diagram for R8C/15 Group.

The user ROM area of R8C/15 group contains an area (program ROM) which stores a microcomputer operating program and the 1-Kbyte Block A and B (data flash).

The user ROM area is divided into several blocks. The user ROM area can be rewritten in CPU rewrite and standard serial I/O and parallel I/O modes.

When rewriting the Block 0 and Block 1 in CPU rewrite mode, set the FMR02 bit in the FMR0 register to “1” (rewrite enables), and when setting the FMR15 bit in the FMR1 register to “0” (rewrite enables), Block 0 is rewritable. When setting the FMR16 bit to “0” (rewrite enables), Block 1 is rewritable.

The rewrite control program for standard serial I/O mode is stored in boot ROM area before shipment. The boot ROM area and the user ROM area share the same address, but have an another memory.

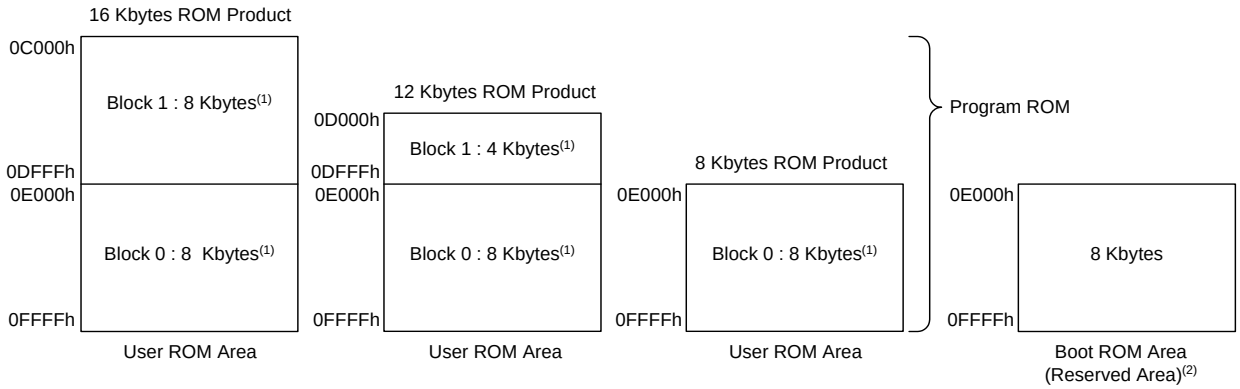

NOTES:
1. When setting the FMR02 bit in the FMR0 register to “1” (enables to rewrite) and the FMR15 bit in the FMR1 register to “0” (enable to rewrite), Block 0 is rewritable. When setting the FMR16 bit to “0” (enables to rewrite), Block 1 is rewritable (only for CPU rewrite mode).
2. This area is to store the boot program provided by Renesas Technology.

Figure 18.1 Flash Memory Block Diagram for R8C/14 Group

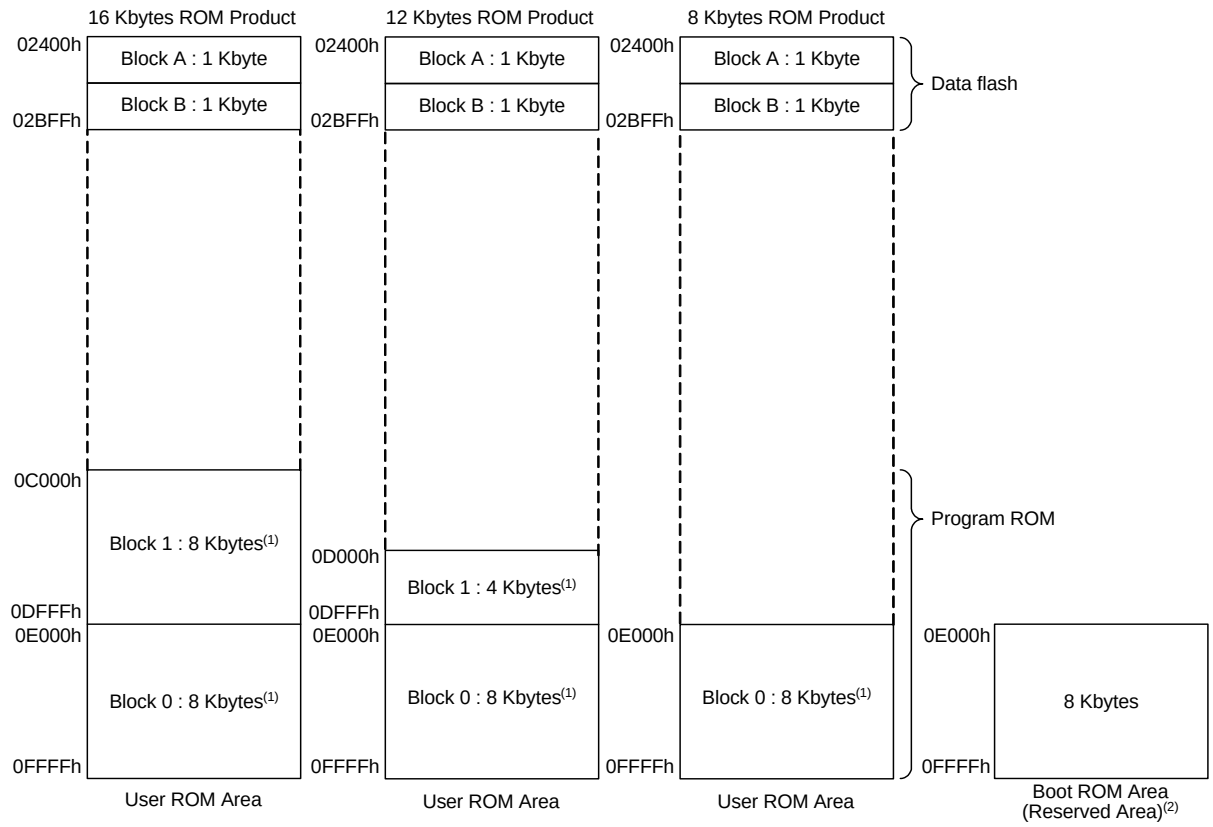

NOTES:
1. When setting the FMR02 bit in the FMR0 register to “1” (enables to rewrite) and the FMR15 bit in the FMR1 register to “0” (enables to rewrite), Block 0 is rewritable. When setting the FMR16 bit to “0” (enables to rewrite), Block 1 is rewritable (only for CPU rewrite mode).
2. This area is to store the boot program provided by Renesas Technology.

Figure 18.2 Flash Memory Block Diagram for R8C/15 Group

18.3 Functions To Prevent Flash Memory from Rewriting

Standard serial I/O mode contains an ID code check function, and the parallel I/O mode contains a ROM code protect function to prevent the flash memory from reading or rewriting easily.

18.3.1 ID Code Check Function

Use this function in standard serial I/O mode. Unless the flash memory is blank, the ID codes sent from the programmer and the ID codes written in the flash memory are determined whether they match. If the ID codes do not match, the commands sent from the programmer are not acknowledged. The ID code consists of 8-bit data, the areas of which, beginning with the first byte, are 00FFDFh, 00FFE3h, 00FFEBh, 00FFEFh, 00FFF3h, 00FFF7h, and 00FFFBh. Write a program in which the ID codes are set at these addresses and write it in the flash memory.

Address		
00FFDFh to 00FFDCh	ID1	Undefined Instruction Vector
00FFE3h to 00FFE0h	ID2	Overflow Vector
00FFE7h to 00FFE4h		BRK Instruction Vector
00FFEBh to 00FFE8h	ID3	Address Match Vector
00FFEFh to 00FFECh	ID4	Single Step Vector
00FFF3h to 00FFF0h	ID5	Oscillation Stop Detection/Watchdog Timer/Voltage Monitor 2 Vector
00FFF7h to 00FFF4h	ID6	Address Break
00FFFBh to 00FFF8h	ID7	(Reserved)
00FFFFh to 00FFFCh	(Note 1)	Reset Vector

4 bytes

NOTES:
1. The OFS register is assigned to 00FFFFh. Refer to Figure 12.2 OFS, WDC, WDTR and WDTS registers for the OFS register details.

Figure 18.3 Address for ID Code Stored

18.3.2 ROM Code Protect Function

The ROM code protect function disables to read and change the internal flash memory by the OFS register in parallel I/O mode. Figure 18.4 shows the OFS Register.

The ROM code protect function is enabled by writing “0” to the ROMCP1 bit and “1” to the ROMCR bit and disables to read and change the internal flash memory. Once the ROM code protect is enabled, the content in the internal flash memory cannot be rewritten in parallel I/O mode. To disable ROM code protect, erase the block including the OFS register with CPU rewrite mode or standard serial I/O mode.

Option Function Select Register(1)

b7	b6	b5	b4	b3	b2	b1	b0
	1	1	1			1	

Symbol	Address	Before Shipment
OFS	0FFFFh	FFh(2)

Bit Symbol	Bit Name	Function	RW
WDTON	Watchdog Timer Start Select Bit	0 : Starts watchdog timer automatically after reset 1 : Watchdog timer is inactive after reset	RW
— (b1)	Reserved Bit	Set to “1”	RW
ROMCR	ROM Code Protect Disabled Bit	0 : ROM code protect disabled 1 : ROMCP1enabled	RW
ROMCP1	ROM Code Protect Bit	0 : ROM code protect enabled 1 : ROM code protect disabled	RW
— (b6-b4)	Reserved Bit	Set to “1”	RW
CSPROINI	Count Source Protect Mode After Reset Select Bit	0 : Count source protect mode after reset enabled 1 : Count source protect mode after reset disabled	RW

NOTES :

1. The OFS register is on the flash memory. Write to the OFS register with a program.
2. If the block including the OFS register is erased, “FFh” is set to the OFS register.

Figure 18.4 OFS Register

18.4 CPU Rewrite Mode

In CPU rewrite mode, user ROM area can be rewritten by executing software commands from the CPU. Therefore, the user ROM area can be rewritten directly while the microcomputer is mounted on a board without using such as a ROM programmer. Execute the program and block erase commands only to each block in user ROM area.

When an interrupt request is generated during an erase operation in CPU rewrite mode, the flash module contains an erase-suspend function which performs the interrupt process after the erase operation is halted temporarily. During the erase-suspend, user ROM area can be read by a program.

CPU rewrite mode contains erase write 0 mode(EW0 mode) and erase write 1 mode(EW1 mode). Table 18.3 lists the Differences between EW0 Mode and EW1 Mode.

Table 18.3 Differences between EW0 Mode and EW1 Mode

Item	EW0 Mode	EW1 Mode
Operating Mode	Single chip mode	Single chip mode
Area in which rewrite control program can be located	User ROM area	User ROM area
Area in which rewrite control program can be executed	Necessary to transfer to any areas other than the flash memory (e.g., RAM) before executing	Executing directly on user ROM area is possible
Area which can be rewritten	User ROM area	User ROM area However, other than the blocks which contain a rewrite control program(1)
Software Command Restriction	None	• Program, block erase command Disable to execute on any block which contains a rewrite control program • Disables to execute the read status register command
Mode after Program or Erase	Read status register mode	Read array mode
CPU Status during Auto-Write and Auto-Erase	Operating	Hold state (I/O ports hold state before the command is executed)
Flash Memory Status Detection	• Read the FMR00, FMR06, and FMR07 bits in the FMR0 register by a program • Execute the read status register command and read the SR7, SR5, and SR4 bits in the status register.	Read the FMR00, FMR06, and FMR07 bits in the FMR0 register by a program
Condition for Transition to Erase-Suspend	Set the FMR40 and FMR41 bits in the FMR4 register to “1” by a program.	The FMR40 bit in the FMR4 register is set to “1” and the interrupt request of the enabled maskable interrupt is generated
CPU Clock	5MHz or below	No restriction to the following (clock frequency to be used)

NOTES:

1. When setting the FMR02 bit in the FMR0 register to “1” (rewrite enables) and rewriting Block 0 is enabled by setting the FMR15 bit in the FMR1 register to “0” (rewrite enables). Rewriting Block 1 is enabled by setting the FMR16 bit to “0” (rewrite enables).

18.4.1 EW0 Mode

The microcomputer enters CPU rewrite mode and software commands can be acknowledged by setting the FMR01 bit in the FMR0 register to “1” (CPU rewrite mode enabled). In this case, since the FMR11 bit in the FMR1 register is set to “0”, EW0 mode is selected.
Use software commands to control a program and erase operations. The FMR0 register or the status register can determine status when program and erase operation complete.
When entering an erase-suspend, set the FMR40 bit to “1” (enables erase-suspend) and the FMR41 bit to “1” (requests erase-suspend). Wait for td(SR-ES) and ensure that the FMR46 bit is set to “1” (enables reading) before accessing the user ROM area. The auto-erase operation restarts by setting the FMR41 bit to “0” (erase restarts).

18.4.2 EW1 Mode

The microcomputer enters EW1 mode by setting the FMR11 bit to “1” (EW1 mode) after setting the FMR01 bit to “1” (CPU rewrite mode enabled).
The FMR0 register can determine status when program and erase operation complete. Do not execute the read status register command in EW1 mode.
To enable the erase-suspend function, execute the block erase command after setting the FMR40 bit to “1” (enables erase-suspend). The interrupt to enter an erase-suspend should be in interrupt enabled status. After passing td(SR-ES) since the block erase command is executed, an interrupt request is acknowledged.
When an interrupt request is generated, the FMR41 bit is automatically set to "1" (requests erase-suspend) and the auto-erase operation is halted. If the auto-erase operation does not complete (FMR00 bit is “0”) when the interrupt process completes, the auto-erase operation restarts by setting the FMR41 bit to “0” (erase restarts)

Figure 18.5 shows the FMR0 Register. Figure 18.6 shows the FMR1 and FMR4 Registers.

18.4.2.1 FMR00 Bit

This bit indicates the operating status of the flash memory. The bit is “0” during programming, erasing, or erase-suspend mode; otherwise, the bit is “1”.

18.4.2.2 FMR01 Bit

The microcomputer is made ready to accept commands by setting the FMR01 bit to “1” (CPU rewrite mode).

18.4.2.3 FMR02 Bit

The Block1 and Block0 do not accept the Program and Block Erase commands if the FMR02 bit is set to “0” (rewrite disabled).
The Block0 and Block1 are controlled rewriting in the FMR15 and FMR16 bits if the FMR02 bit is set to “1” (rewrite enabled).

18.4.2.4 FMSTP Bit

This bit is provided for initializing the flash memory control circuits, as well as for reducing the amount of current consumed in the flash memory. The flash memory is disabled against access by setting the FMSTP bit to “1”. Therefore, the FMSTP bit must be written to by a program in other than the flash memory.
In the following cases, set the FMSTP bit to “1”:

- When flash memory access resulted in an error while erasing or programming in EW0 mode (FMR00 bit not reset to “1” (ready))
- When entering on-chip oscillator mode (main clock stop)

Figure 18.10 shows a flow chart to be followed before and after entering on-chip oscillator mode (main clock stop). Note that when going to stop or wait mode while the CPU rewrite mode is disabled, the FMR0 register does not need to be set because the power for the flash memory is automatically turned off and is turned back on again after returning from stop or wait mode.

18.4.2.5 FMR06 Bit

This is a read-only bit indicating the status of auto program operation. The bit is set to “1” when a program error occurs; otherwise, it is cleared to “0”. For details, refer to the description of the **18.4.5 Full Status Check**.

18.4.2.6 FMR07 Bit

This is a read-only bit indicating the status of auto erase operation. The bit is set to “1” when an erase error occurs; otherwise, it is set to “0”. Refer to **18.4.5 Full Status Check** for the details.

18.4.2.7 FMR11 Bit

Setting this bit to “1” (EW1 mode) places the microcomputer in EW1 mode.

18.4.2.8 FMR15 Bit

When the FMR02 bit is set to “1” (rewrite enabled) and the FMR15 bit is set to “0” (rewrite enabled), the Block0 accepts the program command and block erase command.

18.4.2.9 FMR16 Bit

When the FMR02 bit is set to “1” (rewrite enabled) and the FMR16 bit is set to “0” (rewrite enabled), the Block1 accepts the program command and block erase command.

18.4.2.10 FMR40 bit

The erase-suspend function is enabled by setting the FMR40 bit to “1” (enable).

18.4.2.11 FMR41 bit

In EW0 mode, the microcomputer enters erase-suspend mode when setting the FMR41 bit to “1” by a program. The FMR41 bit is automatically set to “1” (requests erase-suspend) when an interrupt request of an enabled interrupt is generated in EW1 mode, and then the microcomputer enters erase-suspend mode.
Set the FMR41 bit to “0” (erase restart) when the auto-erase operation restarts.

18.4.2.12 FMR46 bit

The FMR46 bit is set to “0” (disable reading) during auto-erase execution and set to “1” (enables reading) in erase-suspend mode. Do not access to the flash memory while this bit is set to “0”.

Flash Memory Control Register 0

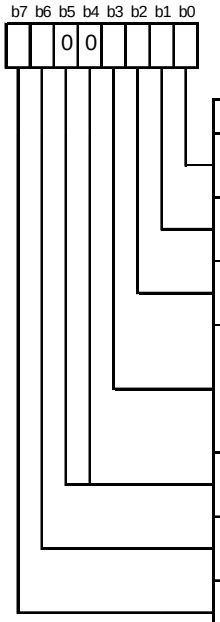

Symbol	Address	After Reset
FMR0	01B7h	00000001b

Bit Symbol	Bit Name	Function	RW
FMR00	RY/$\overline{BY}$ Status Flag	0 : Busy (During writing or erasing) 1 : READY	RO
FMR01	CPU Rewrite Mode Select Bit(1)	0 : CPU rewrite mode disabled 1 : CPU rewrite mode enabled	RW
FMR02	Block 0, 1 Rewrite Enable Bit(2, 6)	0 : Disables rewrite 1 : Enables rewrite	RW
FMSTP	Flash Memory Stop Bit(3, 5)	0 : Enables flash memory operation 1 : Stops flash memory (Enters low-power consumption state and flash memory is reset)	RW
— (b5-b4)	Reserved Bit	Set to “0”	RW
FMR06	Program Status Flag(4)	0 : Completed successfully 1 : Terminated by error	RO
FMR07	Erase Status Flag(4)	0 : Completed successfully 1 : Terminated by error	RO

NOTES :

1. When setting this bit to “1”, set to “1” immediately after setting it first to “0”. Do not generate an interrupt between setting the bit to “0” and setting it to “1”. Enter read array mode and set this bit to “0”.
2. Set this bit to “1” immediately after setting this bit first to “0” while the FMR01 bit is set to “1”. Do not generate an interrupt between setting the bit to “0” and setting it to “1”.
3. Set this bit by a program in a space other than the flash memory.
4. This bit is set to “0” by executing the clear status command.
5. This bit is enabled when the FMR01 bit is set to “1” (CPU rewrite mode). When the FMR01 bit is set to “0” and writing “1” to the FMSTP bit, the FMSTP bit is set to “1”. The flash memory does not enter low-power consumption stat nor is reset.
6. When setting the FMR01 bit to “0” (CPU rewrite mode disabled), the FMR02 bit is set to “0” (disables rewrite).

Figure 18.5 FMR0 Register

Flash Memory Control Register 1

b7	b6	b5	b4	b3	b2	b1	b0
1			0	0	0		

Symbol	Address	After Reset
FMR1	01B5h	1000000Xb

Bit Symbol	Bit Name	Function	RW
— (b0)	Reserved Bit	When read, its content is indeterminate.	RO
FMR11	EW1 Mode Select Bit(1, 2)	0 : EW0 mode 1 : EW1 mode	RW
— (b4-b2)	Reserved Bit	Set to “0”	RW
FMR15	Block 0 Rewrite Disable Bit(2,3)	0 : Enables rewrite 1 : Disables rewrite	RW
FMR16	Block 1 Rewrite Disable Bit(2,3)	0 : Enables rewrite 1 : Disables rewrite	RW
— (b7)	Reserved Bit	Set to “1”	RW

NOTES :

1. When setting this bit to “1”, set to “1” immediately after setting it first to “0” while the FMR01 bit is set to “1” (CPU rewrite mode enable) . Do not generate an interrupt between setting the bit to “0” and setting it to “1”.
2. This bit is set to “0” by setting the FMR01 bit to “0” (CPU rewrite mode disabled).
3. When the FMR01 bit is set to “1” (CPU rewrite mode enabled), the FMR15 and FMR16 bits can be written.
   When setting this bit to “0”, set to “0” immediately after setting it first to “1”.
   When setting this bit to “1”, set it to “1”.

Flash Memory Control Register 4

b7	b6	b5	b4	b3	b2	b1	b0
0		0	0	0	0		

Symbol	Address	After Reset
FMR4	01B3h	01000000b

Bit Symbol	Bit Name	Function	RW
FMR40	Erase-Suspend Function Enable Bit(1)	0 : Disable 1 : Enable	RW
FMR41	Erase-Suspend Request Bit(2)	0 : Erase restart 1 : Erase-suspend request	RW
— (b5-b2)	Reserved Bit	Set to “0”	RO
FMR46	Read Status Flag	0 : Disables reading 1 : Enables reading	RO
— (b7)	Reserved Bit	Set to “0”	RW

NOTES :

1. When setting this bit to “1”, set to “1” immediately after setting it first to “0”. Do not generate an interrupt between setting the bit to “0” and setting it to “1”.
2. This bit is enabled when the FMR40 bit is set to “1” (enable) and this bit can be written during the period between issuing an erase command and completing an erase (This bit is set to “0” during the periods other than above).
   In EW0 mode, this can be set to “0” and “1” by a program.
   In EW1 mode, this bit is automatically set to “1” if a maskable interrupt is generated during an erase operation while the FMR40 bit is set to “1”. Do not set this bit to “1” by a program (“0” can be written).

Figure 18.6 FMR1 and FMR4 Registers

Figure 18.7 shows the Timing on Suspend Operation.

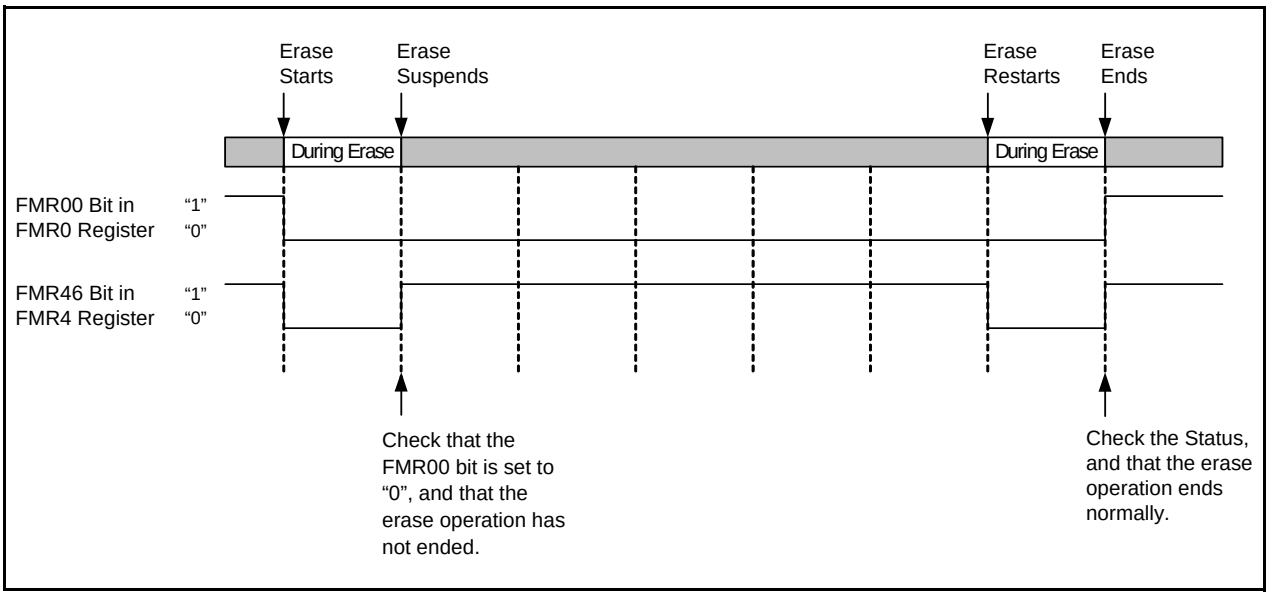

Figure 18.7 Timing on Suspend Operation

Figure 18.8 shows the How to Set and Exit EW0 Mode. Figure 18.9 shows the How to Set and Exit EW1 Mode.

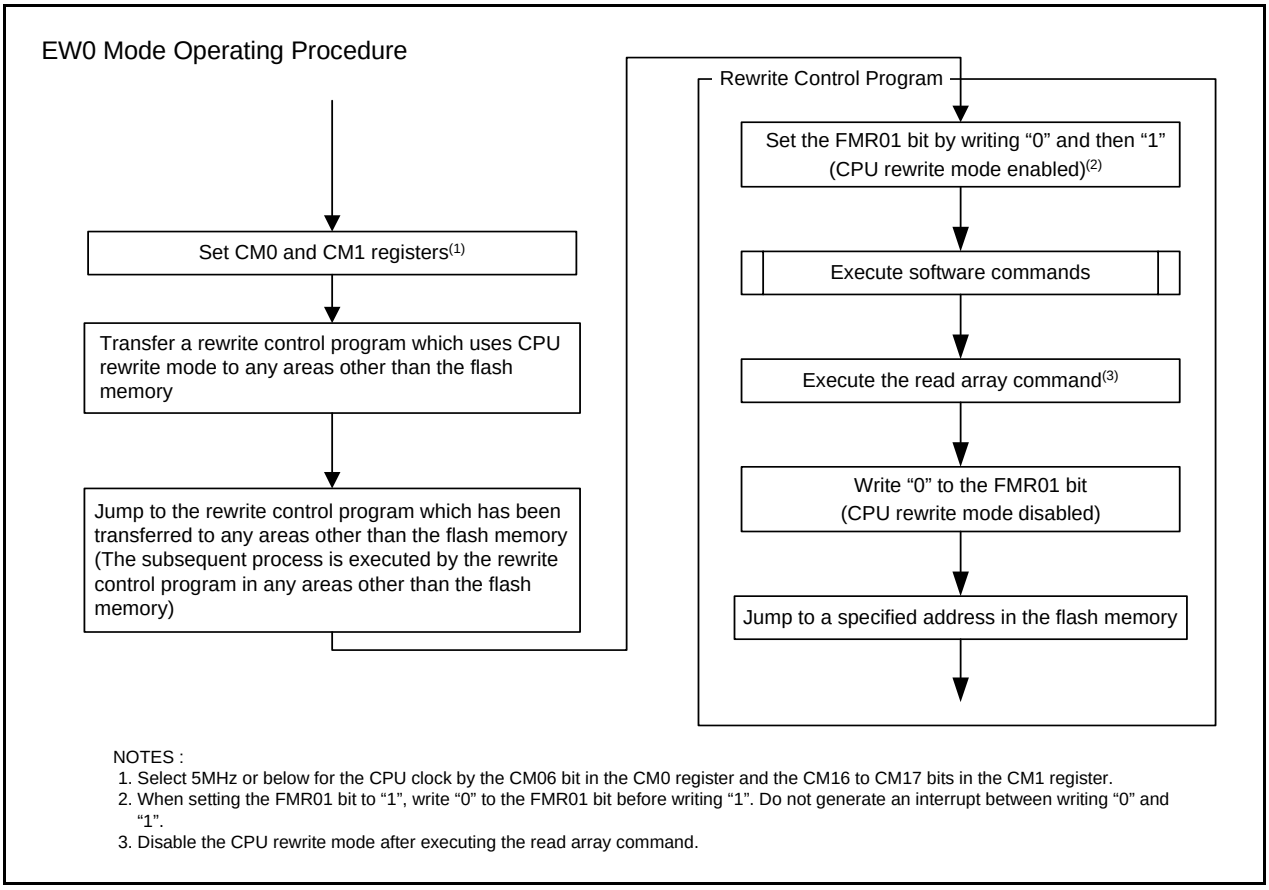

Figure 18.8 How to Set and Exit EW0 Mode

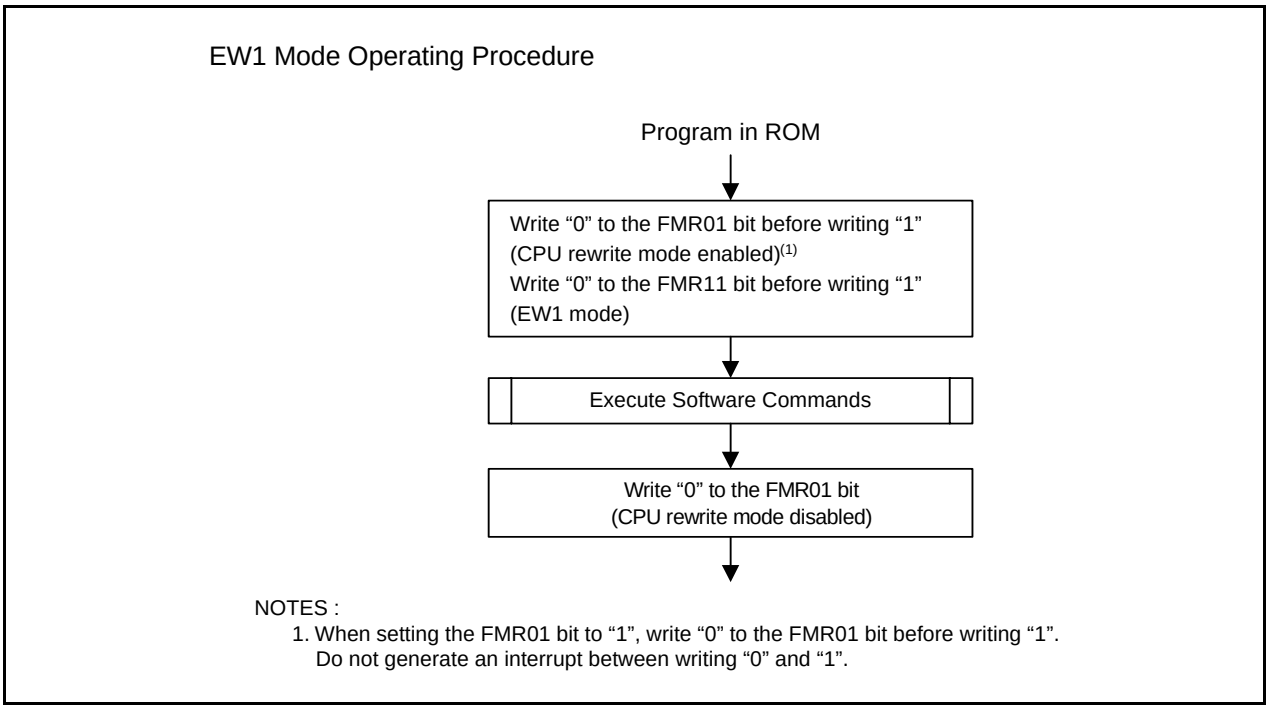

Figure 18.9 How to Set and Exit EW1 Mode

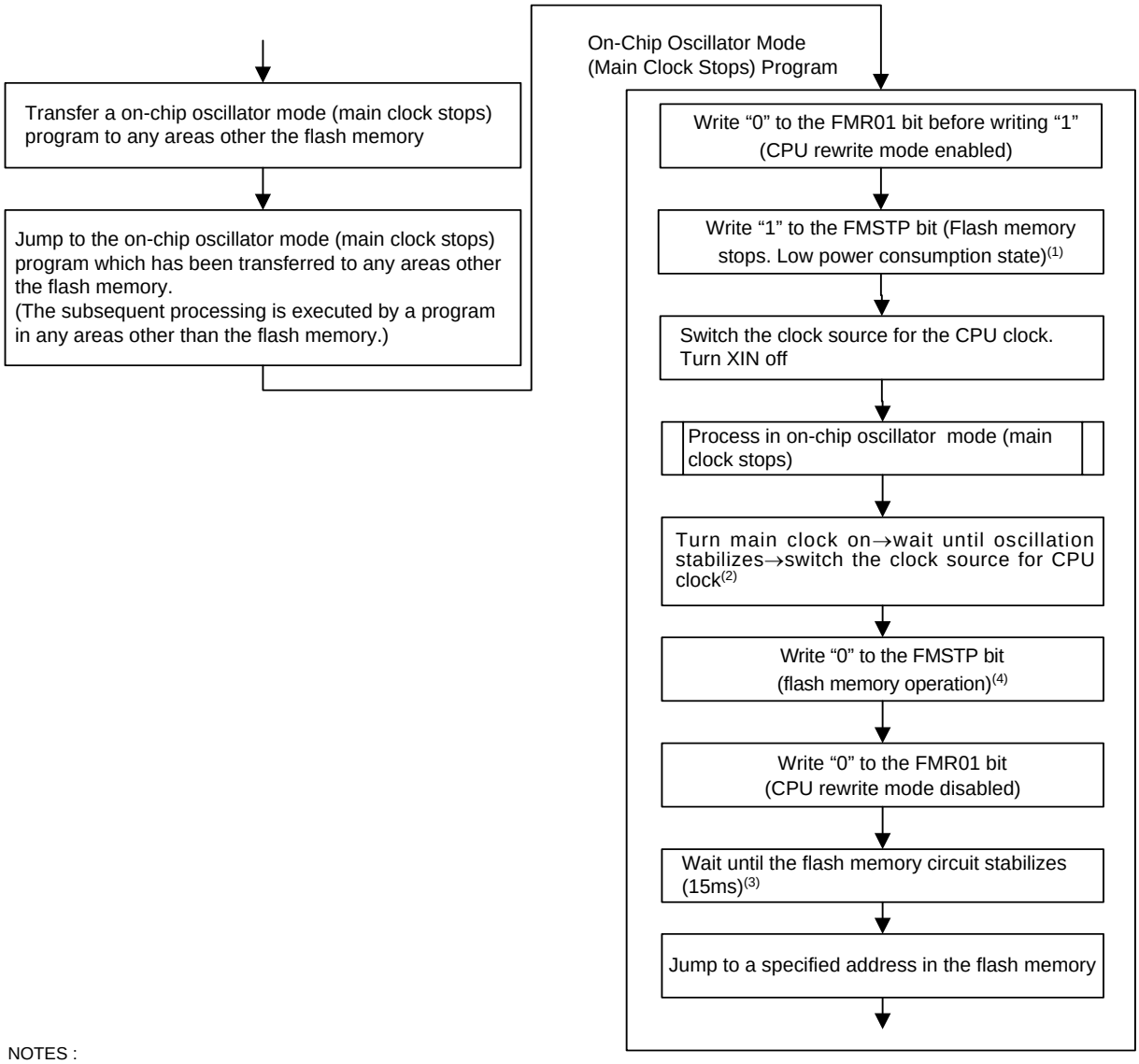

NOTES :
1. Set the FMR01 bit to "1" (CPU rewrite mode) before setting the FMSTP bit to "1" .
2. Before the clock source for CPU clock can be changed, the clock to which to be changed must be stable.
3. Insert a 15us wait time in a program. Do not access to the flash memory during this wait time.
4. Ensure 10us until setting "0" (flash memory operates) after setting the FMSTP bit to "1" (flash memory stops).

Figure 18.10 Process to Reduce Power Consumption in On-Chip Oscillator Mode (Main Clock Stops)

18.4.3 Software Commands

Software commands are described below. Read or write commands and data from or to in 8-bit units.

Table 18.4 Software Commands

Command	First Bus Cycle			Second Bus Cycle		
	Mode	Address	Data (D7 to D0)	Mode	Address	Data (D7 to D0)
Read Array	Write	×	FFh			
Read Status Register	Write	×	70h	Read	×	SRD
Clear Status Register	Write	×	50h			
Program	Write	WA	40h	Write	WA	WD
Block Erase	Write	×	20h	Write	BA	D0h

SRD: Status register data (D7 to D0)
WA: Write address (Ensure the address specified in the first bus cycle is the same address as the address specified in the second bus cycle.)
WD: Write data (8 bits)
BA: Given block address
×: Any specified address in the user ROM area

18.4.3.1 Read Array Command

The read array command reads the flash memory.
The microcomputer enters read array mode by writing “FFh” in the first bus cycle. If entering the read address after the following bus cycles, the content of the specified address can be read in 8-bit units. Since the microcomputer remains in read array mode until another command is written, the contents of multiple addresses can be read continuously.

18.4.3.2 Read Status Register Command

The read status register command reads the status register.
If writing “70h” in the first bus cycle, the status register can be read in the second bus cycle. (Refer to **18.4.4 Status Register**) When reading the status register, specify an address in the user ROM area. Do not execute this command in EW1 mode.

18.4.3.3 Clear Status Register Command

The clear status register command sets the status register to “0”.
If writing “50h” in the first bus cycle, the FMR06 to FMR07 bits in the FMR0 register and SR4 to SR5 in the status register will be set to “0”.

18.4.3.4 Program Command

The program command writes data to the flash memory in 1-byte units.
Write “40h” in the first bus cycle and write data to the write address in the second bus cycle, and an auto program operation (data program and verify) will start. Make sure the address value specified in the first bus cycle is the same address as the write address specified in the second bus cycle.
The FMR00 bit in the FMR0 register can determine whether auto programming has completed. The FMR00 bit is set to “0” during auto programming and set to “1” when auto programming completes.
The FMR06 bit in the FMR0 register can determine the result of auto programming after it has been finished.(Refer to **18.4.5 Full Status Check**)
Do not write additions to the already programmed address.
When the FMR02 bit in the FMR0 register is set to “0” (disable rewriting), or the FMR02 bit is set to “1” (rewrite enables) and the FMR15 bit in the FMR1 register is set to “1” (disable rewriting), the program command on Block 0 is not acknowledged. When the FMR16 bit is set to “1” (disable rewriting), the program command on Block 1 is not acknowledged.
In EW1 mode, do not execute this command on any address at which the rewrite control program is allocated.
In EW0 mode, the microcomputer enters read status register mode at the same time auto programming starts and the status register can be read. The status register bit 7 (SR7) is set to “0” at the same time auto programming starts and set back to “1” when auto programming completes. In this case, the microcomputer remains in read status register mode until a read array command is written next. Reading the status register can determine the result of auto programming after auto programming has completed.

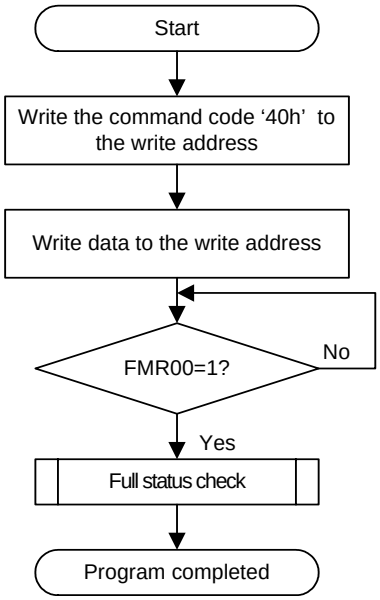

Figure 18.11 Program Command

18.4.3.5 Block Erase

If writing ”20h” in the first bus cycle and “D0h” to the given address of a block in the second bus cycle, and an auto erase operation (erase and verify) will start.
The FMR00 bit in the FMR0 register can determine whether auto erasing has completed.
The FMR00 bit is set to “0” during auto erasing and set to “1” when auto erasing completes.
The FMR07 bit in the FMR0 register can determine the result of auto erasing after auto erasing has completed. (Refer to **18.4.5 Full Status Check**)
When the FMR02 bit in the FMR0 register is set to “0” (disable rewriting) or the FMR02 bit is set to “1” (rewrite enables) and the FMR15 bit in the FMR1 register is set to “1” (disable rewriting), the block erase command on Block 0 is not acknowledged. When the FMR16 bit is set to “1” (disable rewriting), the block erase command on Block 1 is not acknowledged.
Figure 18.12 shows the Block Erase Command (When Not Using Erase-Suspend Function). Figure 18.13 shows the Block Erase Command (When Using Erase-Suspend Function).
In EW1 mode, do not execute this command on any address at which the rewrite control program is allocated.
In EW0 mode, the microcomputer enters read status register mode at the same time auto erasing starts and the status register can be read. The status register bit 7 (SR7) is set to “0” at the same time auto erasing starts and set back to “1” when auto erasing completes. In this case, the microcomputer remains in read status register mode until the read array command is written next.

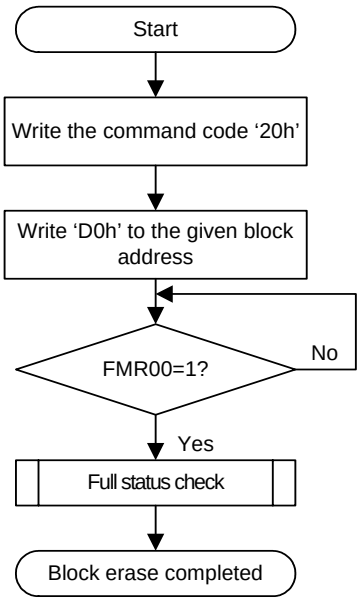

Figure 18.12 Block Erase Command (When Not Using Erase-Suspend Function)

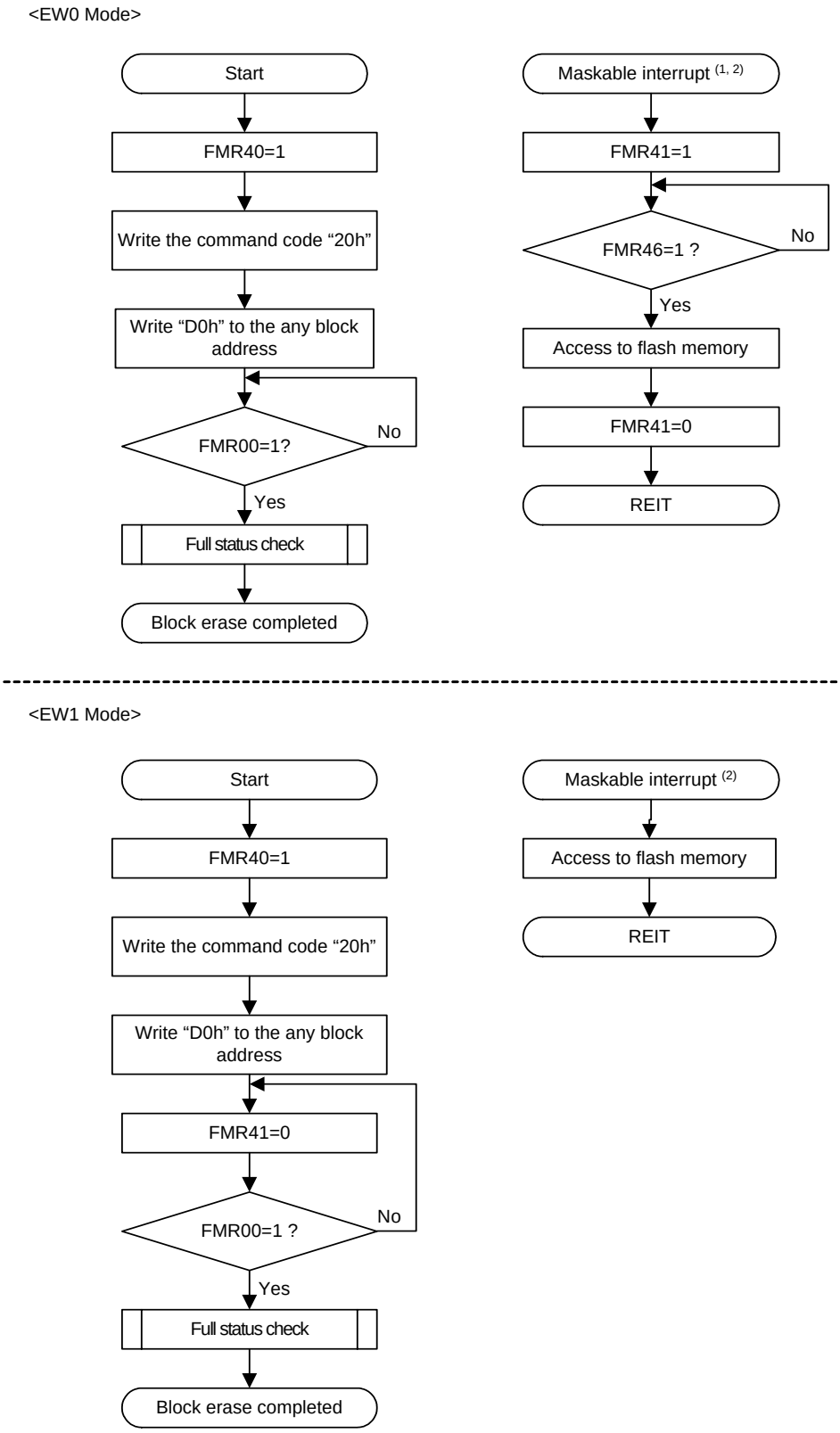

NOTES :
1. In EW0 mode, interrupt vector table and interrupt routine for an interrupt to be used should be allocated in RAM area.
2. td(SR-ES) is needed until the interrupt request is acknowledged after it is generated. The interrupt to enter an erase-suspend should be in interrupt enabled status.

Figure 18.13 Block Erase Command (When Using Erase-Suspend Function)

18.4.4 Status Register

The status register indicates the operating status of the flash memory and whether an erasing or programming operation completes normally or in error. Status of the status register can be read by the FMR00, FMR06, and FMR07 bits in the FMR0 register.
Table 18.5 lists the Status Register.
In EW0 mode, the status register can be read in the following cases:

- When a given address in the user ROM area is read after writing the read status register command
- When a given address in the user ROM area is read after executing the program or block erase command but before executing the read array command.

18.4.4.1 Sequencer Status (SR7 and FMR00 Bits)

The sequencer status indicates operating status of the flash memory. SR7 = 0 (busy) during auto programming and auto erasing, and is set to “1” (ready) at the same time the operation completes.

18.4.4.2 Erase Status (SR5 and FMR07 Bits)

Refer to **18.4.5 Full Status Check**.

18.4.4.3 Program Status (SR4 and FMR06 Bits)

Refer to **18.4.5 Full Status Check**.

Table 18.5 Status Register

Status Register Bit	FMR0 Register Bit	Status Name	Contents		Value after Reset
			“0”	“1”	
SR0 (D0)	–	Reserved	–	–	–
SR1 (D1)	–	Reserved	–	–	–
SR2 (D2)	–	Reserved	–	–	–
SR3 (D3)	–	Reserved	–	–	–
SR4 (D4)	FMR06	Program status	Completed normally	Error	0
SR5 (D5)	FMR07	Erase status	Completed normally	Error	0
SR6 (D6)	–	Reserved	–	–	–
SR7 (D7)	FMR00	Sequencer status	Busy	Ready	0

- D0 to D7: Indicates the data bus which is read when the read status register command is executed.
- The FMR07 (SR5) to FMR06 bits (SR4) are set to “0” by executing the clear status register command.
- When the FMR07 bit (SR5) or FMR06 bit (SR4) is set to “1”, the program and block erase command cannot be accepted.

18.4.5 Full Status Check

When an error occurs, the FMR06 to FMR07 bits in the FMR0 register are set to “1”, indicating occurrence of each specific error. Therefore, Checking these status bits (full status check) can determine the executed result.

Table 18.6 lists the Errors and FMR0 Register Status. Figure 18.14 shows the Full Status Check and Handling Procedure for Each Error.

Table 18.6 Errors and FMR0 Register Status

FRM00 Register (Status Register) Status		Error	Error occurrence condition
FMR07(SR5)	FMR06(SR4)		
1	1	Command Sequence Error	• When any command is not written correctly • When invalid data other than those that can be written in the second bus cycle of the block erase command is written (i.e., other than “D0h” or “FFh”)(1) • When executing the program command or block erase command while rewriting is disabled using the FMR02 bit in the FMR0 register, the FMR15 or FMR16 bit in the FMR1 register. • When inputting and erasing the address in which the Flash memory is not allocated during the erase command input • When executing to erase the block which disables rewriting during the erase command input. • When inputting and writing the address in which the Flash memory is not allocated during the write command input. • When executing to write the block which disables rewriting during the write command input.
1	0	Erase Error	• When the block erase command is executed but not automatically erased correctly
0	1	Program Error	• When the program command is executed but not automatically programmed correctly.

NOTES:

1. The microcomputer enters read array mode by writing “FFh” in the second bus cycle of these commands, at the same time the command code written in the first bus cycle will disabled.

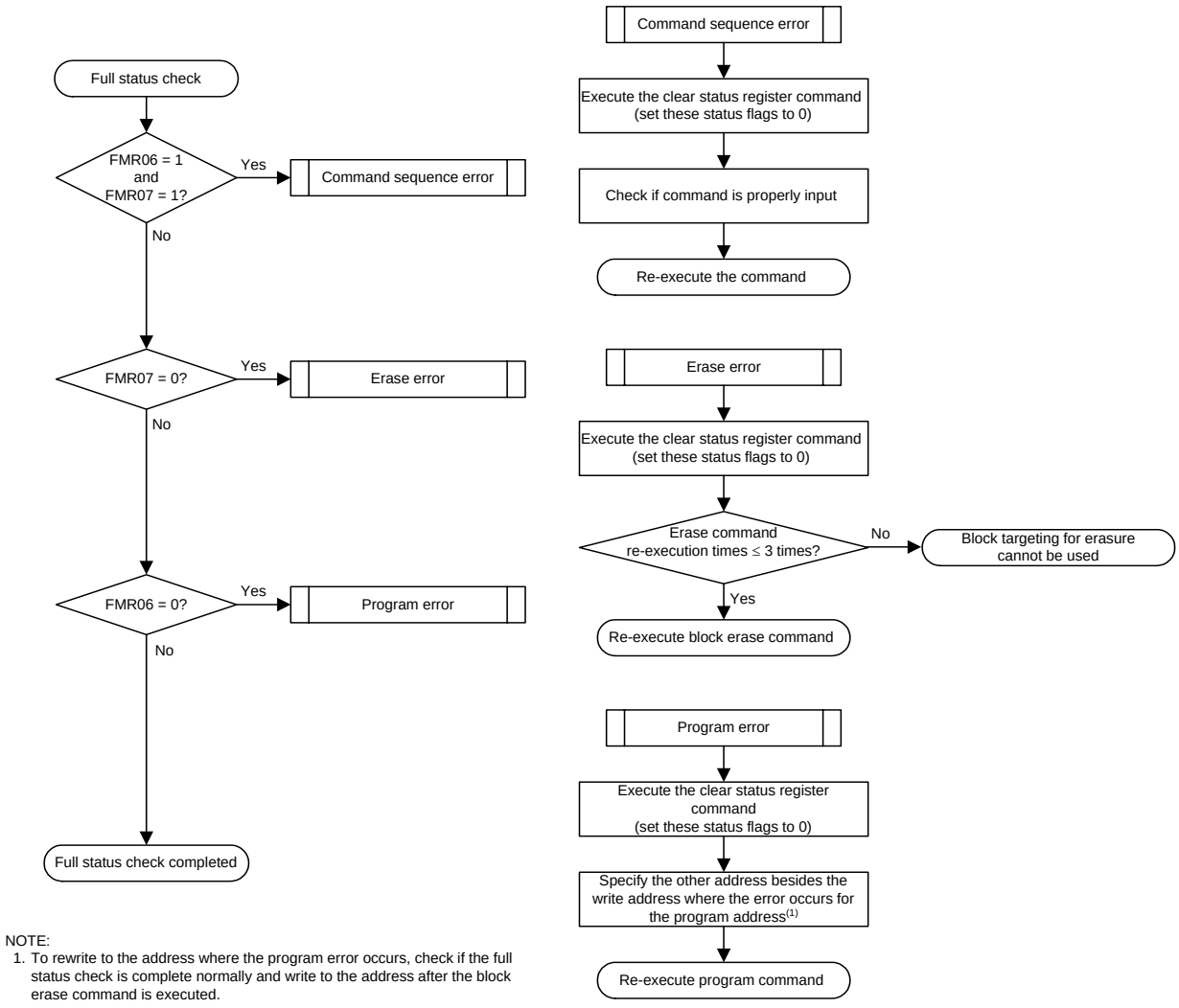

NOTE:
1. To rewrite to the address where the program error occurs, check if the full status check is complete normally and write to the address after the block erase command is executed.

Figure 18.14 Full Status Check and Handling Procedure for Each Error

18.5 Standard Serial I/O Mode

In standard serial I/O mode, the user ROM area can be rewritten while the microcomputer is mounted on-board by using a serial programmer which is applicable for this microcomputer.
Standard serial I/O mode is used to connect with a serial writer using a special clock asynchronous serial I/O.
There are three types of Standard serial I/O modes:

- Standard serial I/O mode 1 ..... Clock synchronous serial I/O used to connect with a serial programmer
- Standard serial I/O mode 2 ..... Clock asynchronous serial I/O used to connect with a serial programmer
- Standard serial I/O mode 3 ..... Special clock asynchronous serial I/O used to connect with a serial programmer

This microcomputer uses Standard serial I/O mode 2 and Standard serial I/O mode 3.

Refer to **Appendix 2. Connecting Example between Serial Writer and On-Chip Debugging Emulator.** Contact the manufacturer of your serial programmer for serial programmer. Refer to the user's manual of your serial programmer for details on how to use it.

Table 18.7 lists the Pin Functions (Flash Memory Standard Serial I/O Mode 2), Table 18.8 lists the Pin Functions (Flash Memory Standard Serial I/O Mode 3). Figure 18.15 show Pin Connections for Standard Serial I/O Mode 3.
After processing the pins shown in Table 18.8 and rewriting a flash memory using a writer, apply "H" to the MODE pin and reset a hardware if a program is operated on the flash memory in single-chip mode.

18.5.1 ID Code Check Function

The ID code check function determines whether the ID codes sent from the serial programmer and those written in the flash memory match (refer to **18.3 Functions To Prevent Flash Memory from Rewriting**).

Table 18.7 Pin Functions (Flash Memory Standard Serial I/O Mode 2)

Pin	Name	I/O	Description
VCC,VSS	Power input		Apply the voltage guaranteed for program and erase to VCC pin and 0V to VSS pin.
$\overline{\text{RESET}}$	Reset input	I	Reset input pin.
P4_6/XIN	P4_6 input/clock input	I	Connect ceramic resonator or crystal oscillator between XIN and XOUT pins.
P4_7/XOUT	P4_7 input/clock output	I/O	
AVCC, AVSS	Analog power supply input	I	Connect AVSS to VSS and AVCC to VCC, respectively.
P1_0 to P1_7	Input port P1	I	Input "H" or "L" level signal or leave the pin open.
VREF	Reference voltage input	I	Reference voltage input pin to A/D converter.
P3_3 to P3_5	Input port P3	I	Input "H" or "L" level signal or leave the pin open.
MODE	MODE	I/O	Input "L".
P3_7	TXD output	O	Serial data output pin.
P4_5	RXD input	I	Serial data input pin.

Table 18.8 Pin Functions (Flash Memory Standard Serial I/O Mode 3)

Pin	Name	I/O	Description
VCC,VSS	Power input		Apply the voltage guaranteed for program and erase to VCC pin and 0V to VSS pin.
$\overline{\text{RESET}}$	Reset input	I	Reset input pin.
P4_6/XIN	P4_6 input/clock input	I	Connect ceramic resonator or crystal oscillator between XIN and XOUT pins when connecting external oscillator. Apply “H” and “L” or leave the pin open when using as input port
P4_7/XOUT	P4_7 input/clock output	I/O	
AVCC, AVSS	Analog power supply input	I	Connect AVSS to VSS and AVCC to VCC, respectively.
VREF	Reference voltage input	I	Reference voltage input pin to A/D converter.
P1_0 to P1_7	Input port P1	I	Input “H” or “L” level signal or leave the pin open.
P3_3 to P3_5, P3_7	Input port P3	I	Input “H” or “L” level signal or leave the pin open.
P4_5	Input port P4	I	Input “H” or “L” level signal or leave the pin open.
MODE	MODE	I/O	Serial data I/O pin. Connect to the flash programmer.

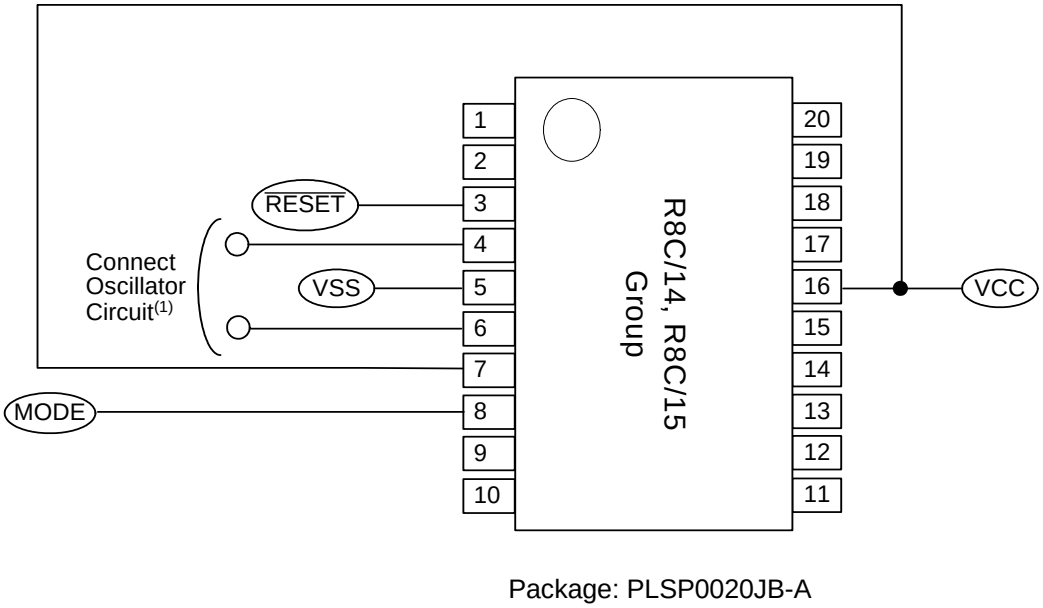

Package: PLSP0020JB-A

NOTES:
1. No need to connect an oscillating circuit when operating with on-chip oscillator clock.

Mode Setting

Signal	Value
MODE	Voltage from programmer
$\overline{\text{RESET}}$	VSS → VCC

Figure 18.15 Pin Connections for Standard Serial I/O Mode 3

18.5.1.1 Example of Circuit Application in the Standard Serial I/O Mode

Figure 18.16 show Pin Process in Standard Serial I/O Mode 2, Figure 18.17 show Pin Process in Standard Serial I/O Mode 3. Since the controlled pins vary depending on the programmer, refer to the manual of your serial programmer.

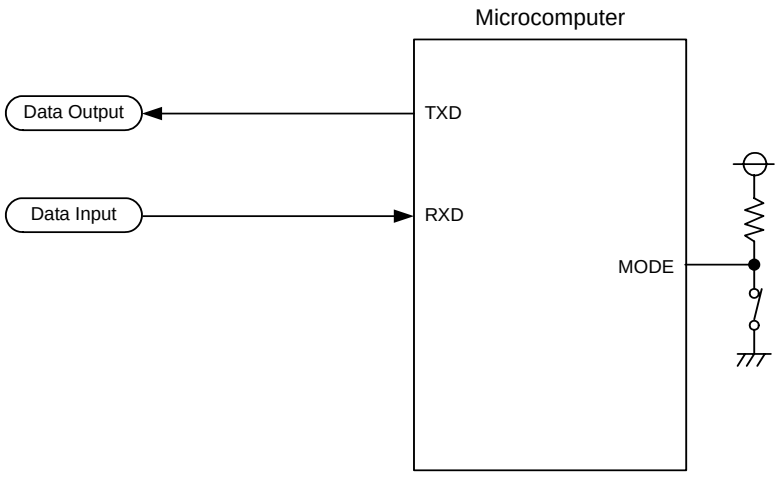

NOTES:
1. In this example, modes are switched between single-chip mode and standard serial I/O mode by controlling the MODE input with a switch.
2. Connecting the oscillation is necessary. Set the main clock frequency 1 MHz to 20 MHz. Refer to **Appendix 2.1 Connecting examples with M16C Flash Starter (M3A-0806)**.

Figure 18.16 Pin Process in Standard Serial I/O Mode 2

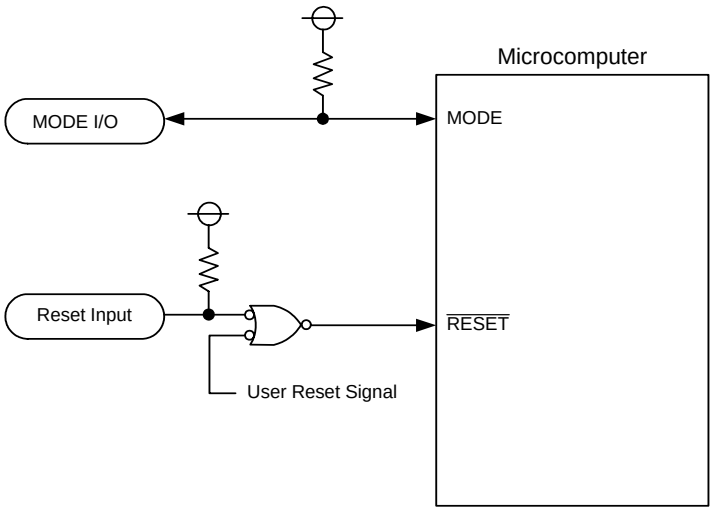

NOTES:
1. Controlled pins and external circuits vary depending on the programmer. Refer to the programmer manual for details.
2. In this example, modes are switched between single-chip mode and standard serial I/O mode by connecting a programmer.
3. When operating with on-chip oscillator clock, connecting the oscillating circuit is not necessary.

Figure 18.17 Pin Process in Standard Serial I/O Mode 3

18.6 Parallel I/O Mode

Parallel I/O mode is used to input and output the required software command, address and data parallel to controls (read, program and erase) for internal flash memory. Use a parallel programmer which supports this microcomputer. Contact the manufacturer of your parallel programmer about the parallel programmer and refer to the user's manual of your parallel programmer for details on how to use it.

User ROM area can be rewritten shown in Figures 18.1 and 18.2 in parallel I/O mode.

18.6.1 ROM Code Protect Function

The ROM code protect function disables to read and rewrite the flash memory. (Refer to the **18.3 Functions To Prevent Flash Memory from Rewriting**.)

19. Electrical Characteristics

Table 19.1 Absolute Maximum Ratings

Symbol	Parameter	Condition	Rated value	Unit
V_{CC}	Supply Voltage	V_{CC} = AV_{CC}	-0.3 to 6.5	V
AV_{CC}	Analog Supply Voltage	V_{CC} = AV_{CC}	-0.3 to 6.5	V
V_I	Input Voltage		-0.3 to V_{CC}+0.3	V
V_O	Output Voltage		-0.3 to V_{CC}+0.3	V
P_d	Power Dissipation	T_{opr} = 25°C	300	mW
T_{opr}	Operating Ambient Temperature		-20 to 85 / -40 to 85 (D version)	°C
T_{stg}	Storage Temperature		-65 to 150	°C

Table 19.2 Recommended Operating Conditions

Symbol	Parameter		Conditions	Standard			Unit
				Min.	Typ.	Max.	
V_{CC}	Supply Voltage			2.7	–	5.5	V
AV_{CC}	Analog Supply Voltage			–	V_{CC}(3)	–	V
V_{SS}	Supply Voltage			–	0	–	V
AV_{SS}	Analog Supply Voltage			–	0	–	V
V_{IH}	Input “H” Voltage			0.8V_{CC}	–	V_{CC}	V
V_{IL}	Input “L” Voltage			0	–	0.2V_{CC}	V
$I_{OH(sum)}$	Peak Sum Output “H” Current	Sum of All Pins $I_{OH\ (peak)}$		–	–	-60	mA
$I_{OH(peak)}$	Peak Output “H” Current			–	–	-10	mA
$I_{OH(avg)}$	Average Output “H” Current			–	–	-5	mA
$I_{OL(sum)}$	Peak Sum Output “L” Currents	Sum of All Pins $I_{OL\ (peak)}$		–	–	60	mA
$I_{OL(peak)}$	Peak Output “L” Currents	Except P1_0 to P1_3		–	–	10	mA
		P1_0 to P1_3	Drive Capacity HIGH	–	–	30	mA
			Drive Capacity LOW	–	–	10	mA
$I_{OL(avg)}$	Average Output “L” Current	Except P1_0 to P1_3		–	–	5	mA
		P1_0 to P1_3	Drive Capacity HIGH	–	–	15	mA
			Drive Capacity LOW	–	–	5	mA
$f_{(XIN)}$	Main Clock Input Oscillation Frequency		3.0V ≤ V_{CC} ≤ 5.5V	0	–	20	MHz
			2.7V ≤ V_{CC} < 3.0V	0	–	10	MHz

NOTES:
1. V_{CC} = AV_{CC} = 2.7 to 5.5V at T_{opr} = -20 to 85 °C / -40 to 85 °C, unless otherwise specified.
2. The typical values when average output current is 100ms.
3. Hold V_{CC} = AV_{CC}.

Table 19.3 A/D Converter Characteristics

Symbol	Parameter		Conditions	Standard			Unit
				Min.	Typ.	Max.	
–	Resolution		V_{ref} = V_{CC}	–	–	10	Bits
–	Absolute Accuracy	10-Bit Mode	ϕ_{AD} = 10MHz, V_{ref} = V_{CC} = 5.0V	–	–	±3	LSB
		8-Bit Mode	ϕ_{AD} = 10MHz, V_{ref} = V_{CC} = 5.0V	–	–	±2	LSB
		10-Bit Mode	ϕ_{AD} = 10MHz, V_{ref} = V_{CC} = 3.3V(3)	–	–	±5	LSB
		8-Bit Mode	ϕ_{AD} = 10MHz, V_{ref} = V_{CC} = 3.3V(3)	–	–	±2	LSB
R_{ladder}	Resistor Ladder		V_{ref} = V_{CC}	10	–	40	kΩ
t_{conv}	Conversion Time	10-Bit Mode	ϕ_{AD} = 10MHz, V_{ref} = V_{CC} = 5.0V	3.3	–	–	μs
		8-Bit Mode	ϕ_{AD} = 10MHz, V_{ref} = V_{CC} = 5.0V	2.8	–	–	μs
V_{ref}	Reference voltage			–	V_{CC}(4)	–	V
V_{IA}	Analog Input Voltage			0	–	V_{ref}	V
–	A/D Operating Clock Frequency(2)	Without Sample & Hold		0.25	–	10	MHz
		With Sample & Hold		1	–	10	MHz

NOTES:
1. V_{CC} = AV_{CC} = 2.7 to 5.5V at T_{opr} = -20 to 85 °C / -40 to 85 °C, unless otherwise specified.
2. If f1 exceeds 10MHz, divide the f1 and hold A/D operating clock frequency (ϕ_{AD}) 10MHz or below.
3. If the AVcc is less than 4.2V, divide the f1 and hold A/D operating clock frequency (ϕ_{AD}) f1/2 or below.
4. Hold V_{CC} = V_{ref}

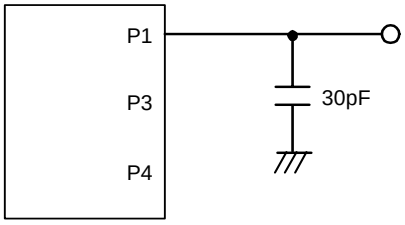

Figure 19.1 Port P1, P3 and P4 Measurement Circuit

Table 19.4 Flash Memory (Program ROM) Electrical Characteristics

Symbol	Parameter	Conditions	Standard			Unit
			Min.	Typ.	Max.	
–	Program/Erase Endurance(2)	R8C/14 Group	100(3)	–	–	times
		R8C/15 Group	1,000(3)	–	–	times
–	Byte Program Time	V_{CC} = 5.0 V at T_{opr} = 25 °C	–	50	400	μs
–	Block Erase Time	V_{CC} = 5.0 V at T_{opr} = 25 °C	–	0.4	9	s
$t_{d(SR-ES)}$	Time Delay from Suspend Request until Erase Suspend		–	–	8	ms
–	Erase Suspend Request Interval		10	–	–	ms
–	Program, Erase Voltage		2.7	–	5.5	V
–	Read Voltage		2.7	–	5.5	V
–	Program, Erase Temperature		0	–	60	°C
–	Data Hold Time(7)	Ambient temperature = 55 °C	20	–	–	year

NOTES:

1. V_{CC} = AVcc = 2.7 to 5.5V at Topr = 0 to 60 °C, unless otherwise specified.
2. Definition of program and erase
   The program and erase endurance shows an erase endurance for every block.
   If the program and erase endurance is “n” times (n = 100, 10000), “n” times erase can be performed for every block.
   For example, if performing 1-byte write to the distinct addresses on Block A of 1Kbyte block 1,024 times and then erasing that block, program and erase endurance is counted as one time.
   However, do not perform multiple programs to the same address for one time ease.(disable overwriting).
3. Endurace to guarantee all electrical characteristics after program and erase.(1 to “Min.” value can be guaranateed).
4. In the case of a system to execute multiple programs, perform one erase after programming as reducing effective reprogram endurance not to leave blank area as possible such as programming write addresses in turn . If programming a set of 16 bytes, programming up to 128 sets and then erasing them one time can reduce effective reprogram endurance. Additionally, averaging erase endurance for Block A and B can reduce effective reprogram endurance more. To leave erase endurance for every block as information and determine the restricted endurance are recommended.
5. If error occurs during block erase, attempt to execute the clear status register command, then the block erase command at least three times until the erase error does not occur.
6. Customers desiring Program/Erase failure rate information should contact their Renesas technical support representative.
7. The data hold time incudes time that the power supply is off or the clock is not supplied.

Table 19.5 Flash Memory (Data flash Block A, Block B) Electrical Characteristics

Symbol	Parameter	Conditions	Standard			Unit
			Min.	Typ.	Max.	
–	Program/Erase Endurance(2)		10,000(3)	–	–	times
–	Byte Program Time (Program/Erase Endurance ≤ 1,000 Times)	V_{CC} = 5.0 V at T_{opr} = 25 °C	–	50	400	μs
–	Byte Program Time (Program/Erase Endurance > 1,000 Times)	V_{CC} = 5.0 V at T_{opr} = 25 °C	–	65	–	μs
–	Block Erase Time (Program/Erase Endurance ≤ 1,000 Times)	V_{CC} = 5.0 V at T_{opr} = 25 °C	–	0.2	9	s
–	Block Erase Time (Program/Erase Endurance > 1,000 Times)	V_{CC} = 5.0 V at T_{opr} = 25 °C	–	0.3	–	s
$t_{d(SR-ES)}$	Time Delay from Suspend Request until Erase Suspend		–	–	8	ms
–	Erase Suspend Request Interval		10	–	–	ms
–	Program, Erase Voltage		2.7	–	5.5	V
–	Read Voltage		2.7	–	5.5	V
–	Program, Erase Temperature		-20(8)	–	85	°C
–	Data Hold Time(9)	Ambient temperature = 55 °C	20	–	–	year

NOTES:

1. V_{CC} = AVcc = 2.7 to 5.5V at T_{opr} = –20 to 85 °C / –40 to 85 °C, unless otherwise specified.
2. Definition of program and erase
   The program and erase endurance shows an erase endurance for every block.
   If the program and erase endurance is “n” times (n = 100, 10000), “n” times erase can be performed for every block.
   For example, if performing 1-byte write to the distinct addresses on Block A of 1Kbyte block 1,024 times and then erasing that block, program and erase endurance is counted as one time.
   However, do not perform multiple programs to the same address for one time ease.(disable overwriting).
3. Endurace to guarantee all electrical characteristics after program and erase.(1 to “Min.” value can be guaranateed).
4. Standard of Block A and Block B when program and erase endurance exceeds 1,000 times. Byte program time to 1,000 times aer the same as that in program area.
5. In the case of a system to execute multiple programs, perform one erase after programming as reducing effective reprogram endurance not to leave blank area as possible such as programming write addresses in turn . If programming a set of 16 bytes, programming up to 128 sets and then erasing them one time can reduce effective reprogram endurance. Additionally, averaging erase endurance for Block A and B can reduce effective reprogram endurance more. To leave erase endurance for every block as information and determine the restricted endurance are recommended.
6. If error occurs during block erase, attempt to execute the clear status register command, then the block erase command at least three times until the erase error does not occur.
7. Customers desiring Program/Erase failure rate information should contact their Renesas technical support representative.
8. -40 °C for D version.
9. The data hold time incudes time that the power supply is off or the clock is not supplied.

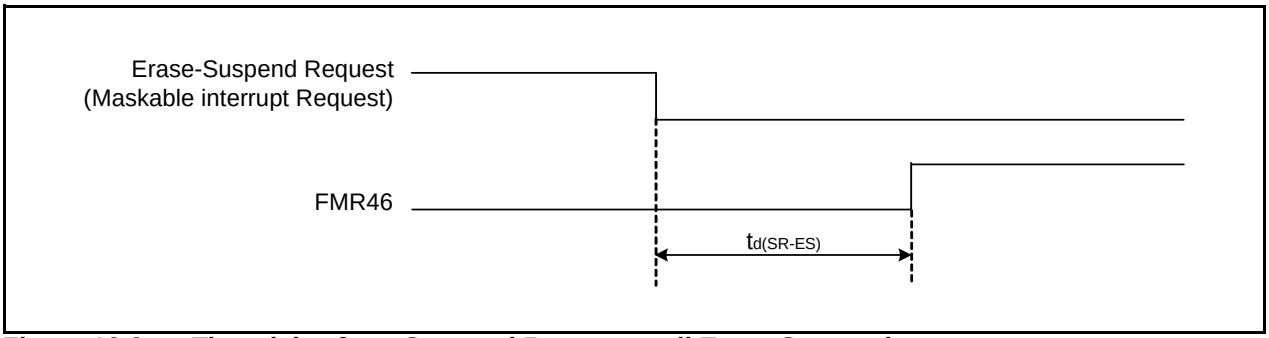

Figure 19.2 Time delay from Suspend Request until Erase Suspend

Table 19.6 Voltage Detection 1 Circuit Electrical Characteristics

Symbol	Parameter	Condition	Standard			Unit
			Min.	Typ.	Max.	
V_{det1}	Voltage Detection Level(3)		2.70	2.85	3.00	V
–	Voltage Detection Circuit Self Power Consumption	VCA26 = 1, V_{CC} = 5.0V	–	600	–	nA
$t_{d(E-A)}$	Waiting Time until Voltage Detection Circuit Operation Starts(2)		–	–	100	µs
Vccmin	Microcomputer Operating Voltage Minimum Value		2.7	–	–	V

NOTES:
1. The measurement condition is V_{CC} = AV_{CC} = 2.7V to 5.5V and T_{opr} = -40°C to 85 °C.
2. Necessary time until the voltage detection circuit operates when setting to “1” again after setting the VCA26 bit in the VCA2 register to “0”.
3. Hold V_{det2} > V_{det1}.

Table 19.7 Voltage Detection 2 Circuit Electrical Characteristics

Symbol	Parameter	Condition	Standard			Unit
			Min.	Typ.	Max.	
V_{det2}	Voltage Detection Level(4)		3.00	3.30	3.60	V
–	Voltage Monitor 2 Interrupt Request Generation Time(2)		–	40	–	µs
–	Voltage Detection Circuit Self Power Consumption	VCA27 = 1, V_{CC} = 5.0V	–	600	–	nA
$t_{d(E-A)}$	Waiting Time until Voltage Detection Circuit Operation Starts(3)		–	–	100	µs

NOTES:
1. The measurement condition is V_{CC} = AV_{CC} = 2.7V to 5.5V and T_{opr} = -40°C to 85 °C.
2. Time until the voltage monitor 2 interrupt request is generated since the voltage passes V_{det1}.
3. Necessary time until the voltage detection circuit operates when setting to “1” again after setting the VCA27 bit in the VCA2 register to “0”.
4. Hold V_{det2} > V_{det1}.

Table 19.8 Reset Circuit Electrical Characteristics (When Using Voltage Monitor 1 Reset)

Symbol	Parameter	Condition	Standard			Unit
			Min.	Typ.	Max.	
V_{por2}	Power-On Reset Valid Voltage	-20°C ≤ Topr < 85°C	–	–	V_{det1}	V
$t_{w(Vpor2-Vdet1)}$	Supply Voltage Rising Time When Power-On Reset is Deasserted(1)	-20°C ≤ Topr < 85°C, $t_{w(por2)}$ ≥ 0s(3)	–	–	100	ms

NOTES:
1. This condition is not applicable when using with Vcc ≥ 1.0V.
2. When turning power on after the time to hold the external power below effective voltage (V_{por1}) exceeds10s, refer to **Table 19.9 Reset Circuit Electrical Characteristics (When Not Using Voltage Monitor 1 Reset)**.
3. $t_{w(por2)}$ is time to hold the external power below effective voltage (V_{por2}).

Table 19.9 Reset Circuit Electrical Characteristics (When Not Using Voltage Monitor 1 Reset)

Symbol	Parameter	Condition	Standard			Unit
			Min.	Typ.	Max.	
V_{por1}	Power-On Reset Valid Voltage	-20°C ≤ Topr < 85°C	–	–	0.1	V
$t_{w(Vpor1-Vdet1)}$	Supply Voltage Rising Time When Power-On Reset is Deasserted	0°C ≤ Topr ≤ 85°C, $t_{w(por1)}$ ≥ 10s(2)	–	–	100	ms
$t_{w(Vpor1-Vdet1)}$	Supply Voltage Rising Time When Power-On Reset is Deasserted	-20°C ≤ Topr < 0°C, $t_{w(por1)}$ ≥ 30s(2)	–	–	100	ms
$t_{w(Vpor1-Vdet1)}$	Supply Voltage Rising Time When Power-On Reset is Deasserted	-20°C ≤ Topr < 0°C, $t_{w(por1)}$ ≥ 10s(2)	–	–	1	ms
$t_{w(Vpor1-Vdet1)}$	Supply Voltage Rising Time When Power-On Reset is Deasserted	0°C ≤ Topr ≤ 85°C, $t_{w(por1)}$ ≥ 1s(2)	–	–	0.5	ms

NOTES:
1. When not using the voltage monitor 1 reset, use with Vcc≥ 2.7V.
2. $t_{w(por1)}$ is time to hold the external power below effective voltage (V_{por1}).

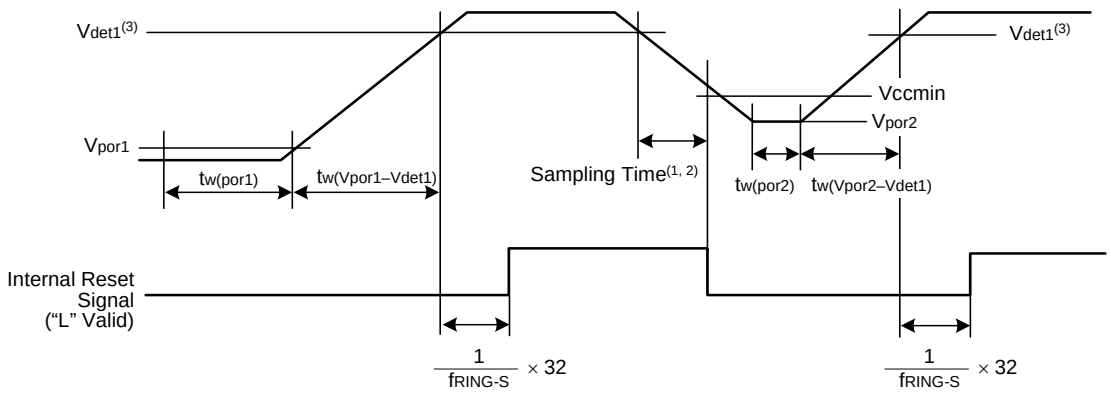

NOTES:
1. Hold the voltage of the microcomputer operation voltage range (Vccmin or above) within sampling time.
2. A sampling clock can be selected. Refer to **6. Voltage Detection Circuit** for details.
3. V_{det1} indicates the voltage detection level of the voltage detection 1 circuit. Refer to **6. Voltage Detection Circuit** for details.

Figure 19.3 Reset Circuit Electrical Characteristics

Table 19.10 High-speed On-Chip Oscillator Circuit Electrical Characteristics

Symbol	Parameter	Condition	Standard			Unit
			Min.	Typ.	Max.	
–	High-Speed On-Chip Oscillator Frequency When the Reset is Deasserted	V_{CC} = 5.0V, T_{opr} = 25 °C	–	8	–	MHz
–	High-Speed On-Chip Oscillator Frequency Temperature • Supplay Voltage Dependence	0 to +60 °C / 5 V ± 5 %(2)	7.44	–	8.56	MHz
		–20 to +85 °C / 2.7 to 5.5 V(2)	7.04	–	8.96	MHz
		–40 to +85 °C / 2.7 to 5.5 V(2)	6.80	–	9.20	MHz

NOTES:
1. The measurement condition is V_{CC} = AV_{CC} = 5.0V and T_{opr} = 25 °C.
2. The standard value shows when the HRA1 register is assumed as the value in shipping and the HRA2 register value is set to 00h.

Table 19.11 Power Supply Circuit Timing Characteristics

Symbol	Parameter	Condition	Standard			Unit
			Min.	Typ.	Max.	
$t_{d(P-R)}$	Time for Internal Power Supply Stabilization during Power-On(2)		1	–	2000	µs
$t_{d(R-S)}$	STOP Exit Time(3)		–	–	150	µs

NOTES:
1. The measurement condition is V_{CC} = AV_{CC} = 2.7 to 5.5V and T_{opr} = 25 °C.
2. Waiting time until the internal power supply generation circuit stabilizes during power-on.
3. Time until CPU clock supply starts since the interrupt is acknowledged to exit stop mode.

Table 19.12 Timing Requirements of Clock Synchronous Serial I/O (SSU) with Chip Select(1)

Symbol	Parameter		Conditions	Standard			Unit
				Min.	Typ.	Max.	
t_{SUCYC}	SSCK Clock Cycle Time			4	–	–	t_{CYC}(2)
t_{HI}	SSCK Clock “H” Width			0.4	–	0.6	t_{SUCYC}
t_{LO}	SSCK Clock “L” Width			0.4	–	0.6	t_{SUCYC}
t_{RISE}	SSCK Clock Rising Time	Master		–	–	1	t_{CYC}(2)
		Slave		–	–	1	µs
t_{FALL}	SSCK Clock Falling Time	Master		–	–	1	t_{CYC}(2)
		Slave		–	–	1	µs
t_{SU}	SSO, SSI Data Input Setup Time			100	–	–	ns
t_H	SSO, SSI Data Input Hold Time			1	–	–	t_{CYC}(2)
t_{LEAD}	$\overline{SCS}$ Setup Time	Slave		1t_{CYC}+50	–	–	ns
t_{LAG}	$\overline{SCS}$ Hold Time	Slave		1t_{CYC}+50	–	–	ns
t_{OD}	SSO, SSI Data Output Delay Time			–	–	1	t_{CYC}(2)
t_{SA}	SSI Slave Access Time			–	–	1.5t_{CYC}+100	ns
t_{OR}	SSI Slave Out Open Time			–	–	1.5t_{CYC}+100	ns

NOTES:
1. V_{CC} = AV_{CC} = 2.7 to 5.5V, V_{SS} = 0V at Topr = -20 to 85 °C / -40 to 85 °C, unless otherwise specified.
2. 1t_{CYC} = 1/f1(s)

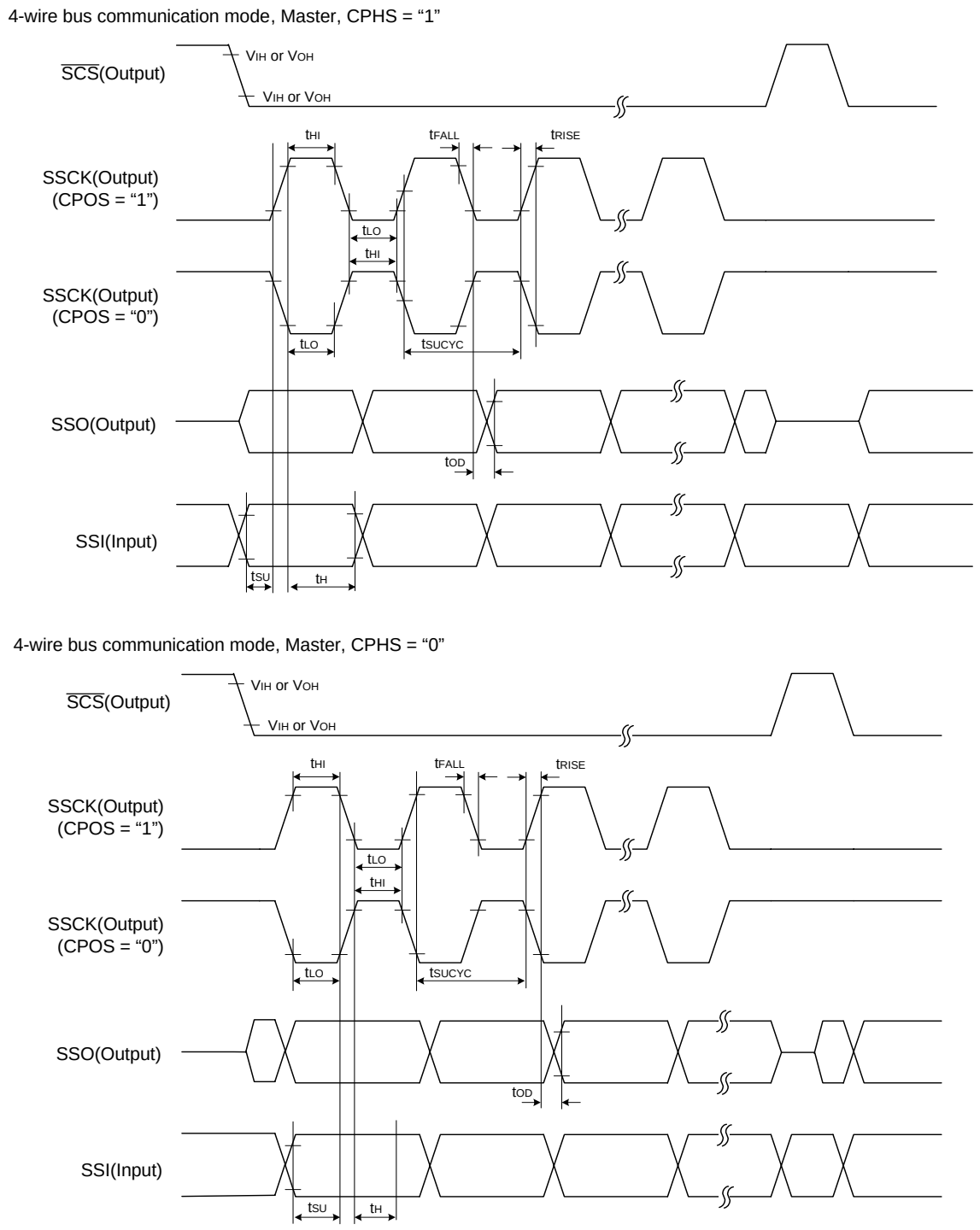

Figure 19.4 I/O Timing of Clock Synchronous Serial I/O (SSU) with Chip Select (Master)

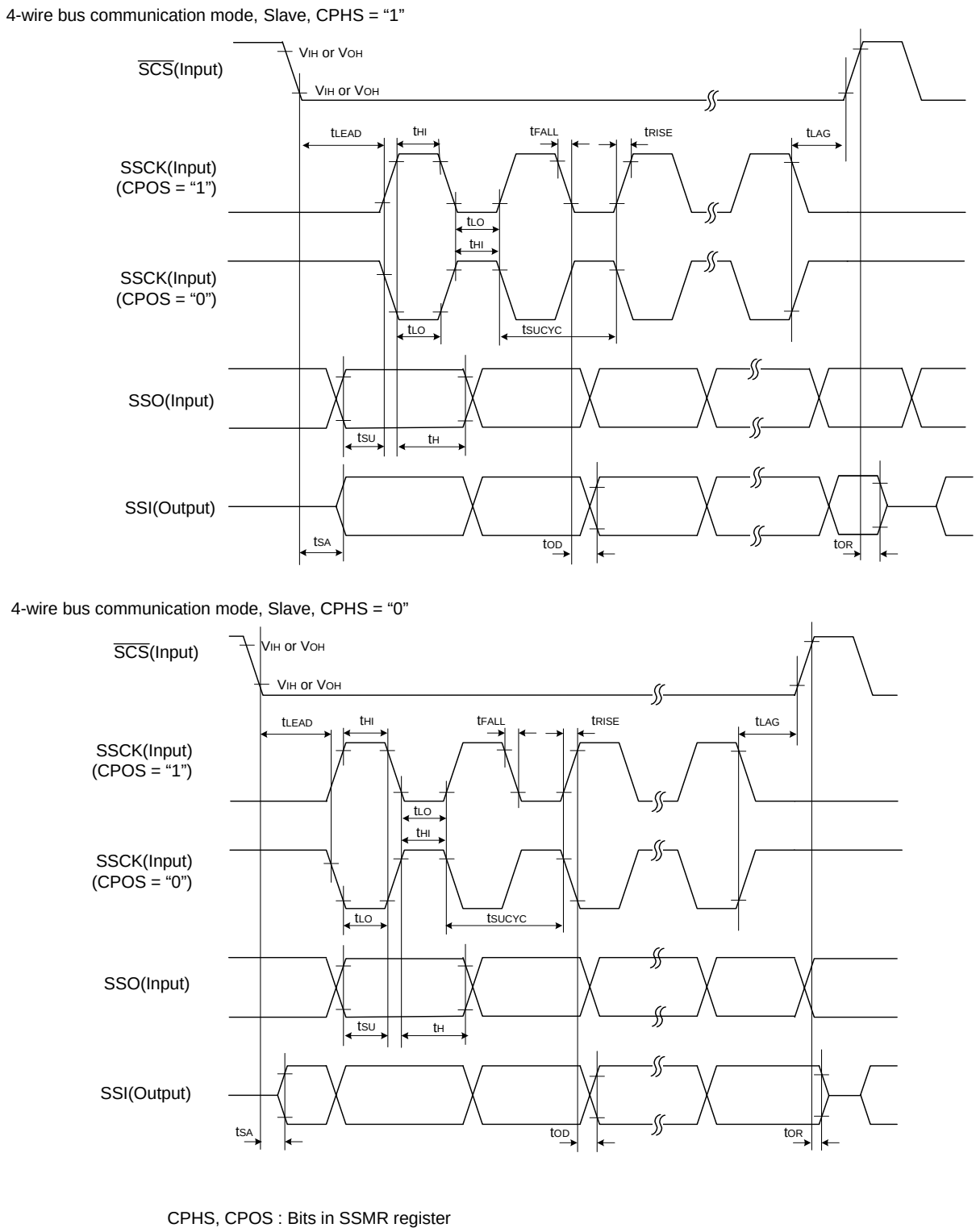

Figure 19.5 I/O Timing of Clock Synchronous Serial I/O (SSU) with Chip Select (Slave)

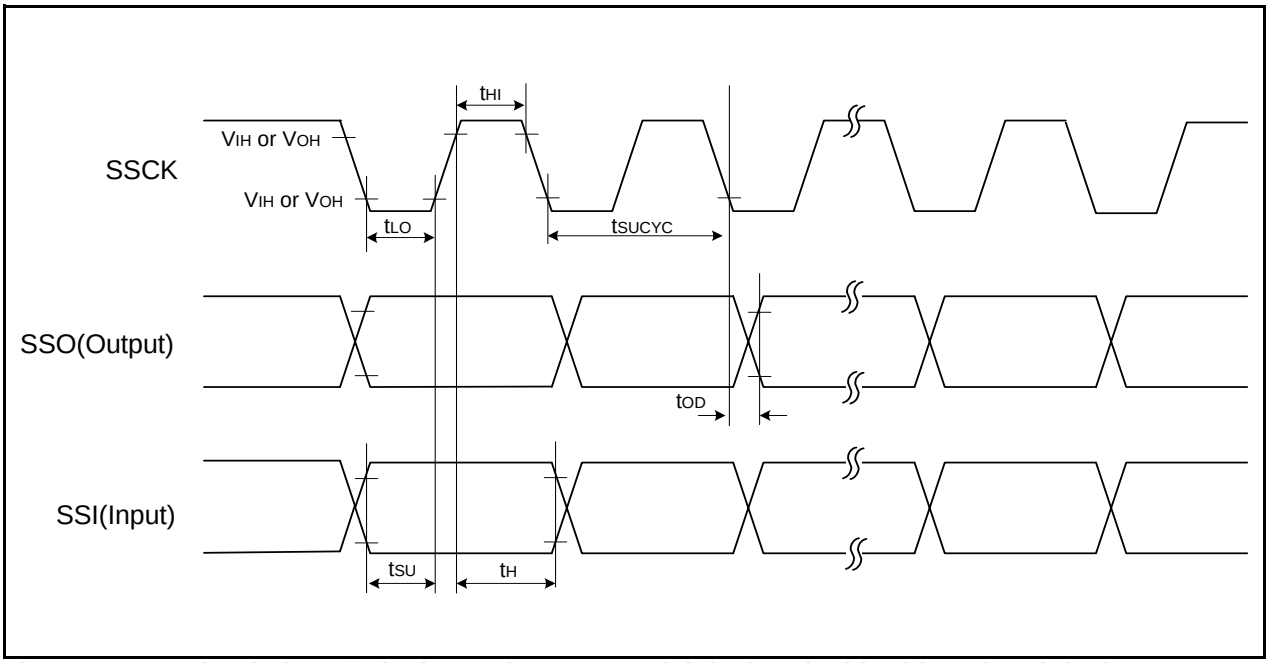

Figure 19.6 I/O Timing of Clock Synchronous Serial I/O (SSU) with Chip Select (Clock Synchronous Communication Mode)

Table 19.13 Electrical Characteristics (1) [V_{CC} = 5V]

Symbol	Parameter		Condition		Standard			Unit
					Min.	Typ.	Max.	
V_{OH}	Output "H" Voltage	Except X_{OUT}	I_{OH} = -5mA		V_{CC} – 2.0	–	V_{CC}	V
			I_{OH} = -200μA		V_{CC} – 0.3	–	V_{CC}	V
		X_{OUT}	Drive capacity HIGH	I_{OH} = -1mA	V_{CC} – 2.0	–	V_{CC}	V
			Drive capacity LOW	I_{OH} = -500μA	V_{CC} – 2.0	–	V_{CC}	V
V_{OL}	Output "L" Voltage	Except P1_0 to P1_3, X_{OUT}	I_{OL} = 5mA		–	–	2.0	V
			I_{OL} = 200μA		–	–	0.45	V
		P1_0 to P1_3	Drive capacity HIGH	I_{OL} = 15mA	–	–	2.0	V
			Drive capacity LOW	I_{OL} = 5mA	–	–	2.0	V
			Drive capacity LOW	I_{OL} = 200μA	–	–	0.45	V
		X_{OUT}	Drive capacity HIGH	I_{OL} = 1mA	–	–	2.0	V
			Drive capacity LOW	I_{OL} = 500μA	–	–	2.0	V
V_{T+}-V_{T-}	Hysteresis	$\overline{INT0}$, $\overline{INT1}$, $\overline{INT3}$, $\overline{KI0}$, $\overline{KI1}$, $\overline{KI2}$, $\overline{KI3}$, CNTR0, CNTR1, TCIN, RXD0, SSO			0.2	–	1.0	V
		$\overline{RESET}$			0.2	–	2.2	V
I_{IH}	Input "H" current		VI = 5V		–	–	5.0	μA
I_{IL}	Input "L" current		VI = 0V		–	–	-5.0	μA
R_{PULLUP}	Pull-Up Resistance		VI = 0V		30	50	167	kΩ
R_{fXIN}	Feedback Resistance	XIN			–	1.0	–	MΩ
f_{RING-S}	Low-Speed On-Chip Oscillator Frequency				40	125	250	kHz
V_{RAM}	RAM Hold Voltage		During stop mode		2.0	–	–	V

NOTES:
1. V_{CC} = AV_{CC} = 4.2 to 5.5V at T_{opr} = -20 to 85 °C / -40 to 85 °C, f(XIN)=20MHz, unless otherwise specified.

Table 19.14 Electrical Characteristics (2) [Vcc = 5V] (Topr = -40 to 85 °C, unless otherwise specified.)

Symbol	Parameter	Condition		Standard			Unit
				Min.	Typ.	Max.	
Icc	Power Supply Current (Vcc=3.3 to 5.5V) In single-chip mode, the output pins are open and other pins are Vss	High-Speed Mode	XIN = 20MHz (square wave) High-speed on-chip oscillator off Low-speed on-chip oscillator on=125kHz No division	–	9	15	mA
			XIN = 16MHz (square wave) High-speed on-chip oscillator off Low-speed on-chip oscillator on=125kHz No division	–	8	14	mA
			XIN = 10MHz (square wave) High-speed on-chip oscillator off Low-speed on-chip oscillator on=125kHz No division	–	5	–	mA
		Medium-Speed Mode	XIN = 20MHz (square wave) High-speed on-chip oscillator off Low-speed on-chip oscillator on=125kHz Divide-by-8	–	4	–	mA
			XIN = 16MHz (square wave) High-speed on-chip oscillator off Low-speed on-chip oscillator on=125kHz Divide-by-8	–	3	–	mA
			XIN = 10MHz (square wave) High-speed on-chip oscillator off Low-speed on-chip oscillator on=125kHz Divide-by-8	–	2	–	mA
		High-Speed On-Chip Oscillator Mode	Main clock off High-speed on-chip oscillator on=8MHz Low-speed on-chip oscillator on=125kHz No division	–	4	8	mA
			Main clock off High-speed on-chip oscillator on=8MHz Low-speed on-chip oscillator on=125kHz Divide-by-8	–	1.5	–	mA
		Low-Speed On-Chip Oscillator Mode	Main clock off High-speed on-chip oscillator off Low-speed on-chip oscillator on=125kHz Divide-by-8	–	470	900	μA
		Wait Mode	Main clock off High-speed on-chip oscillator off Low-speed on-chip oscillator on=125kHz While a WAIT instruction is executed Peripheral clock operation VCA26 = VCA27 = 0	–	40	80	μA
		Wait Mode	Main clock off High-speed on-chip oscillator off Low-speed on-chip oscillator on=125kHz While a WAIT instruction is executed Peripheral clock off VCA26 = VCA27 = 0	–	38	76	μA
		Stop Mode	Main clock off, Topr = 25 °C High-speed on-chip oscillator off Low-speed on-chip oscillator off CM10 = 1 Peripheral clock off VCA26 = VCA27 = 0	–	0.8	3.0	μA

Timing Requirements (Unless otherwise specified: Vcc = 5V, Vss = 0V at Topr = 25 °C) [Vcc = 5V]

Table 19.15 XIN Input

Symbol	Parameter	Standard		Unit
		Min.	Max.	
$t_{c(XIN)}$	XIN Input Cycle Time	50	–	ns
$t_{WH(XIN)}$	XIN Input “H” Width	25	–	ns
$t_{WL(XIN)}$	XIN Input “L” Width	25	–	ns

Table 19.16 CNTR0 Input, CNTR1 Input, $\overline{INT1}$ Input

Symbol	Parameter	Standard		Unit
		Min.	Max.	
$t_{c(CNTR0)}$	CNTR0 Input Cycle Time	100	–	ns
$t_{WH(CNTR0)}$	CNTR0 Input “H” Width	40	–	ns
$t_{WL(CNTR0)}$	CNTR0 input “L” Width	40	–	ns

Table 19.17 TCIN Input, $\overline{INT3}$ Input

Symbol	Parameter	Standard		Unit
		Min.	Max.	
$t_{c(TCIN)}$	TCIN Input Cycle Time	400(1)	–	ns
$t_{WH(TCIN)}$	TCIN Input “H” Width	200(2)	–	ns
$t_{WL(TCIN)}$	TCIN input “L” Width	200(2)	–	ns

NOTES:
1. When using Timer C input capture mode, adjust the cycle time (1/Timer C count source frequency x 3) or above.
2. When using Timer C input capture mode, adjust the width (1/Timer C count source frequency x 1.5) or above.

Table 19.18 Serial Interface

Symbol	Parameter	Standard		Unit
		Min.	Max.	
$t_{c(CK)}$	CLKi Input Cycle Time	200	–	ns
$t_{W(CKH)}$	CLKi Input “H” Width	100	–	ns
$t_{W(CKL)}$	CLKi Input “L” Width	100	–	ns
$t_{d(C-Q)}$	TXDi Output Delay Time	–	50	ns
$t_{h(C-Q)}$	TXDi Hold Time	0	–	ns
$t_{su(D-C)}$	RXDi Input Setup Time	50	–	ns
$t_{h(C-D)}$	RCDi Input Hold Time	90	–	ns

Table 19.19 External Interrupt $\overline{INT0}$ Input

Symbol	Parameter	Standard		Unit
		Min.	Max.	
$t_{W(INH)}$	$\overline{INT0}$ Input “H” Width	250(1)	–	ns
$t_{W(INL)}$	$\overline{INT0}$ Input “L” Width	250(2)	–	ns

NOTES:
1. When selecting the digital filter by the $\overline{INT0}$ input filter select bit, use the $\overline{INT0}$ input HIGH width to the greater value, either (1/digital filter clock frequency x 3) or the minimum value of standard.
2. When selecting the digital filter by the $\overline{INT0}$ input filter select bit, use the $\overline{INT0}$ input LOW width to the greater value, either (1/digital filter clock frequency x 3) or the minimum value of standard.

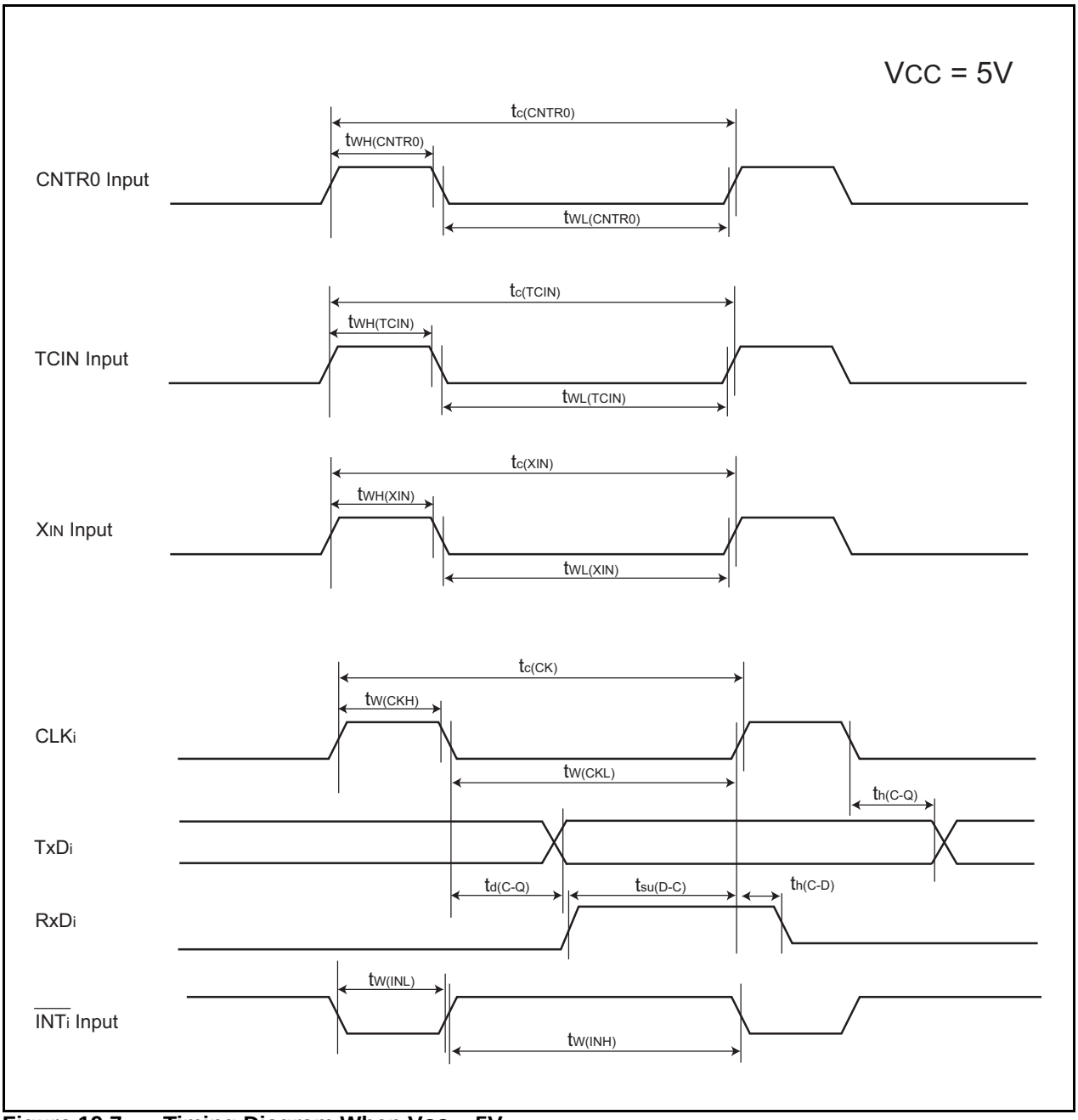

Figure 19.7 Timing Diagram When Vcc = 5V

Table 19.20 Electrical Characteristics (3) [V_{CC} = 3V]

Symbol	Parameter		Condition		Standard			Unit
					Min.	Typ.	Max.	
V_{OH}	Output "H" Voltage	Except X_{OUT}	I_{OH} = -1mA		V_{CC} – 0.5	–	V_{CC}	V
		X_{OUT}	Drive capacity HIGH	I_{OH} = -0.1mA	V_{CC} – 0.5	–	V_{CC}	V
			Drive capacity LOW	I_{OH} = -50μA	V_{CC} – 0.5	–	V_{CC}	V
V_{OL}	Output "L" Voltage	Except P1_0 to P1_3, X_{OUT}	I_{OL} = 1mA		–	–	0.5	V
		P1_0 to P1_3	Drive capacity HIGH	I_{OL} = 2mA	–	–	0.5	V
			Drive capacity LOW	I_{OL} = 1mA	–	–	0.5	V
		X_{OUT}	Drive capacity HIGH	I_{OL} = 0.1mA	–	–	0.5	V
			Drive capacity LOW	I_{OL} = 50μA	–	–	0.5	V
V_{T+}-V_{T-}	Hysteresis	$\overline{INT0}$, $\overline{INT1}$, $\overline{INT3}$, $\overline{KI0}$, $\overline{KI1}$, $\overline{KI2}$, $\overline{KI3}$, CNTR0, CNTR1, TCIN, RXD0, SSO			0.2	–	0.8	V
		$\overline{RESET}$			0.2	–	1.8	V
I_{IH}	Input "H" Current		VI = 3V		–	–	4.0	μA
I_{IL}	Input "L" Current		VI = 0V		–	–	-4.0	μA
R_{PULLUP}	Pull-Up Resistance		VI = 0V		66	160	500	kΩ
R_{fXIN}	Feedback Resistance	XIN			–	3.0	–	MΩ
f_{RING-S}	Low-Speed On-Chip Oscillator Frequency				40	125	250	kHz
V_{RAM}	RAM Hold Voltage		During stop mode		2.0	–	–	V

NOTES:
1. V_{CC} = AV_{CC} = 2.7 to 3.3V at T_{opr} = -20 to 85 °C / -40 to 85 °C, f(XIN)=10MHz, unless otherwise specified.

Table 19.21 Electrical Characteristics (4) [Vcc = 3V] (Topr = -40 to 85 °C, unless otherwise specified.)

Symbol	Parameter	Condition		Standard			Unit
				Min.	Typ.	Max.	
Icc	Power Supply Current (Vcc=2.7 to 3.3V) In single-chip mode, the output pins are open and other pins are Vss	High-Speed Mode	XIN = 20MHz (square wave) High-speed on-chip oscillator off Low-speed on-chip oscillator on=125kHz No division	–	8	13	mA
			XIN = 16MHz (square wave) High-speed on-chip oscillator off Low-speed on-chip oscillator on=125kHz No division	–	7	12	mA
			XIN = 10MHz (square wave) High-speed on-chip oscillator off Low-speed on-chip oscillator on=125kHz No division	–	5	–	mA
		Medium-Speed Mode	XIN = 20MHz (square wave) High-speed on-chip oscillator off Low-speed on-chip oscillator on=125kHz Divide-by-8	–	3	–	mA
			XIN = 16MHz (square wave) High-speed on-chip oscillator off Low-speed on-chip oscillator on=125kHz Divide-by-8	–	2.5	–	mA
			XIN = 10MHz (square wave) High-speed on-chip oscillator off Low-speed on-chip oscillator on=125kHz Divide-by-8	–	1.6	–	mA
		High-Speed On-Chip Oscillator Mode	Main clock off High-speed on-chip oscillator on=8MHz Low-speed on-chip oscillator on=125kHz No division	–	3.5	7.5	mA
			Main clock off High-speed on-chip oscillator on=8MHz Low-speed on-chip oscillator on=125kHz Divide-by-8	–	1.5	–	mA
		Low-Speed On-Chip Oscillator Mode	Main clock off High-speed on-chip oscillator off Low-speed on-chip oscillator on=125kHz Divide-by-8	–	420	800	μA
		Wait Mode	Main clock off High-speed on-chip oscillator off Low-speed on-chip oscillator on=125kHz While a WAIT instruction is executed Peripheral clock operation VCA26 = VCA27 = 0	–	37	74	μA
		Wait Mode	Main clock off High-speed on-chip oscillator off Low-speed on-chip oscillator on=125kHz While a WAIT instruction is executed Peripheral clock off VCA26 = VCA27 = 0	–	35	70	μA
		Stop Mode	Main clock off, Topr = 25 °C High-speed on-chip oscillator off Low-speed on-chip oscillator off CM10 = 1 Peripheral clock off VCA26 = VCA27 = 0	–	0.7	3.0	μA

Timing requirements (Unless otherwise specified: Vcc = 3V, Vss = 0V at Topr = 25 °C) [Vcc = 3V]

Table 19.22 XIN Input

Symbol	Parameter	Standard		Unit
		Min.	Max.	
$t_{c(XIN)}$	XIN Input Cycle Time	100	–	ns
$t_{WH(XIN)}$	XIN Input “H” Width	40	–	ns
$t_{WL(XIN)}$	XIN Input “L” Width	40	–	ns

Table 19.23 CNTR0 Input, CNTR1 Input, $\overline{INT1}$ Input

Symbol	Parameter	Standard		Unit
		Min.	Max.	
$t_{c(CNTR0)}$	CNTR0 Input Cycle Time	300	–	ns
$t_{WH(CNTR0)}$	CNTR0 Input “H” Width	120	–	ns
$t_{WL(CNTR0)}$	CNTR0 Input “L” Width	120	–	ns

Table 19.24 TCIN Input, $\overline{INT3}$ Input

Symbol	Parameter	Standard		Unit
		Min.	Max.	
$t_{c(TCIN)}$	TCIN Input Cycle Time	1,200(1)	–	ns
$t_{WH(TCIN)}$	TCIN Input “H” Width	600(2)	–	ns
$t_{WL(TCIN)}$	TCIN Input “L” Width	600(2)	–	ns

NOTES:
1. When using the Timer C input capture mode, adjust the cycle time (1/Timer C count source frequency x 3) or above.
2. When using the Timer C input capture mode, adjust the width (1/Timer C count source frequency x 1.5) or above.

Table 19.25 Serial Interface

Symbol	Parameter	Standard		Unit
		Min.	Max.	
$t_{c(CK)}$	CLKi Input Cycle Time	300	–	ns
$t_{W(CKH)}$	CLKi Input “H” Width	150	–	ns
$t_{W(CKL)}$	CLKi Input “L” Width	150	–	ns
$t_{d(C-Q)}$	TXDi Output Delay Time	–	80	ns
$t_{h(C-Q)}$	TXDi Hold Time	0	–	ns
$t_{su(D-C)}$	RXDi Input Setup Time	70	–	ns
$t_{h(C-D)}$	RCDi Input Hold Time	90	–	ns

Table 19.26 External Interrupt $\overline{INT0}$ Input

Symbol	Parameter	Standard		Unit
		Min.	Max.	
$t_{W(INH)}$	$\overline{INT0}$ Input “H” Width	380(1)	–	ns
$t_{W(INL)}$	$\overline{INT0}$ Input “L” Width	380(2)	–	ns

NOTES:
1. When selecting the digital filter by the $\overline{INT0}$ input filter select bit, use the $\overline{INT0}$ input HIGH width to the greater value, either (1/digital filter clock frequency x 3) or the minimum value of standard.
2. When selecting the digital filter by the $\overline{INT0}$ input filter select bit, use the $\overline{INT0}$ input LOW width to the greater value, either (1/digital filter clock frequency x 3) or the minimum value of standard.

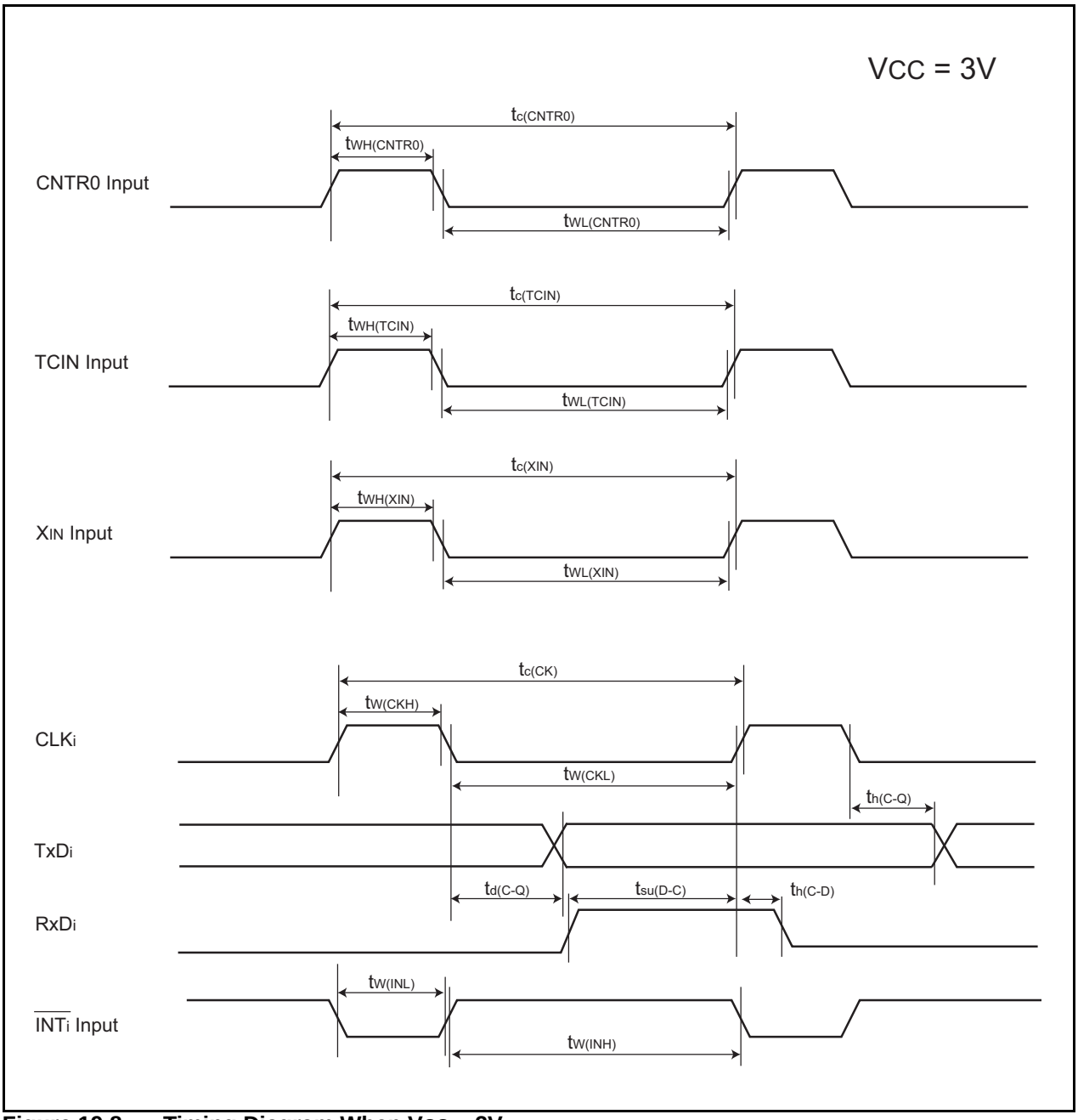

Figure 19.8 Timing Diagram When Vcc = 3V

20. Precautions

20.1 Stop Mode and Wait Mode

20.1.1 Stop Mode

When entering stop mode, set the FMR01 bit to “0” (CPU rewrite mode disabled) and the CM10 bit to “1” (stop mode). An instruction queue pre-reads 4 bytes from the instruction which sets the CM10 bit in the CM1 register to “1” (stop mode) and the program stops. Insert at least 4 NOP instructions after inserting the JMP.B instruction immediately after the instruction which sets the CM10 bit to “1”.
Use the next program to enter stop mode.

- Program to enter stop mode

```
        BCLR    1,FMR0      ; CPU rewrite mode disabled
        BSET    0,PRCR      ; Protect disabled
        BSET    0,CM1       ; Stop mode
        JMP.B   LABEL_001
LABEL_001 :
        NOP
        NOP
        NOP
        NOP
```

20.1.2 Wait Mode

When entering wait mode, set the FMR01 bit to “0” (CPU rewrite mode disabled) and execute the WAIT instruction. An instruction queue pre-reads 4 bytes from the WAIT instruction and the program stops. Insert at least 4 NOP instructions after the WAIT instruction.
Also, the value in the specific internal RAM area may be rewritten when exiting wait mode if writing to the internal RAM area before executing the WAIT instruction and entering wait mode. The area for a maximum of 3 bytes is rewritten from the following address of the internal RAM in which the writing is performed before the WAIT instruction. The rewritten value is the same value as the one which was written before the WAIT instruction. If this causes a problem, avoid by inserting the JMP.B instruction between the writing instruction to the internal RAM area and WAIT instruction as shown in the following program example.

- Example to execute the WAIT instruction

```
Program Example     MOV.B   #055h,0601h  ; Write to internal RAM area
                    ...
                    JMP.B   LABEL_001
                LABEL _001 :
                    FSET    I           ; Enable interrupt
                    BCLR    1,FMR0      ; CPU rewrite mode disabled
                    WAIT                ; Wait mode
                    NOP
                    NOP
                    NOP
                    NOP
```

When accessing any area other than the internal RAM area between the writing instruction to the internal RAM area and execution of the WAIT instruction, this situation will not occur.

20.2 Interrupts

20.2.1 Reading Address 00000h

Do not read the address 00000h by a program. When a maskable interrupt request is acknowledged, the CPU reads interrupt information (interrupt number and interrupt request level) from 00000h in the interrupt sequence. At this time, the acknowledged interrupt IR bit is set to “0”.
If the address 00000h is read in a program, the IR bit for the interrupt which has the highest priority among the enabled interrupts is set to “0”. This may cause a problem that the interrupt is canceled, or an unexpected interrupt is generated.

20.2.2 SP Setting

Set any value in the SP before an interrupt is acknowledged. The SP is set to “0000h” after reset. Therefore, if an interrupt is acknowledged before setting any value in the SP, the program may run out of control.

20.2.3 External Interrupt and Key Input Interrupt

Either an “L” level or an “H” level of at least 250ns width is necessary for the signal input to the $\overline{\text{INT0}}$ to $\overline{\text{INT3}}$ pins and $\overline{\text{KI0}}$ to $\overline{\text{KI3}}$ pins regardless of the CPU clock.s

20.2.4 Watchdog Timer Interrupt

Reset the watchdog timer after a watchdog timer interrupt is generated.

20.2.5 Changing Interrupt Factor

The IR bit in the interrupt control register may be set to “1” (interrupt requested) when the interrupt factor changes. When using an interrupt, set the IR bit to “0” (no interrupt requested) after changing the interrupt factor.

In addition, the changes of interrupt factors include all factors that change the interrupt factors assigned to individual software interrupt numbers, polarities, and timing. Therefore, when a mode change of the peripheral functions involves interrupt factors, edge polarities, and timing, Set the IR bit to “0” (no interrupt requested) after the change. Refer to each peripheral function for the interrupts caused by the peripheral functions.

Figure 20.1 shows an Example of Procedure for Changing Interrupt Factor.

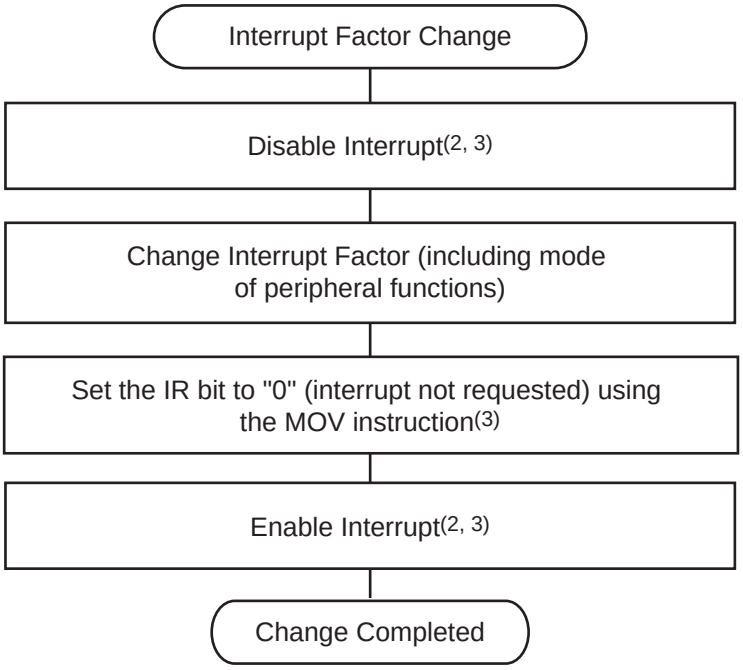

IR Bit: The interrupt control register bit of an interrupt whose factor is changed.

NOTES :

1. Execute the above setting individually. Do not execute 2 or more settings at once (by one instruction).
2. Use the I flag for the $\overline{\text{INTi}}$ (i=0 to 3) interupt.
   To prevent interrupt requests from being generated when using peripheral function interupts other than the $\overline{\text{INTi}}$ interrupt, disable the peripheral function before changing the interrupt factor. In this case, use the I flag when all maskable interrupts can be disabled. When all maskable interrupts cannot be disabled, use the ILVL0 to ILVL2 bits of interrupt whose factor is changed.
3. Refer to the **21.2.6 Changing Interrupt Control Register** for the instructions to be used and their usage notes.

Figure 20.1 Example of Procedure for Changing Interrupt Factor

20.2.6 Changing Interrupt Control Register

(a) Each interrupt control register can only be changed while interrupt requests corresponding to that register are not generated. If interrupt requests may be generated, disable the interrupts before changing the interrupt control register.

(b) When changing any interrupt control register after disabling interrupts, be careful with the instructions to be used.
When changing any bit other than IR bit
If an interrupt request corresponding to that register is generated while executing the instruction, the IR bit may not be set to “1” (interrupt requested), and the interrupt request may be ignored. If this causes a problem, use the following instructions to change the register.
Instructions to use: AND, OR, BCLR, BSET
When changing IR bit
If the IR bit is set to “0” (interrupt not requested), it may not be set to “0” depending on the instruction to be used. Therefore, use the MOV instruction to set the IR bit to “0”.

(c) When disabling interrupts using the I flag, set the I flag according to the following sample programs. Refer to (b) for the change of interrupt control registers in the sample programs.

Sample programs 1 to 3 are preventing the I flag from being set to “1” (interrupt enables) before changing the interrupt control register for reasons of the internal bus or the instruction queue buffer.

Example 1: Use NOP instructions to prevent I flag being set to “1” before interrupt control register is changed

```
INT_SWITCH1:
    FCLR    I               ; Disable interrupts
    AND.B   #00H,0056H      ; Set TXIC register to “00h”
    NOP                     ;
    NOP
    FSET    I               ; Enable interrupts
```

Example 2: Use dummy read to have FSET instruction wait

```
INT_SWITCH2:
    FCLR    I               ; Disable interrupts
    AND.B   #00H,0056H      ; Set TXIC register to “00h”
    MOV.W   MEM,R0          ; Dummy read
    FSET    I               ; Enable interrupts
```

Example 3: Use POPC instruction to change I flag

```
INT_SWITCH3:
    PUSHC   FLG
    FCLR    I               ; Disable interrupts
    AND.B   #00H,0056H      ; Set TXIC register to “00h”
    POPC    FLG             ; Enable interrupts
```

20.3 Clock Generation Circuit

20.3.1 Oscillation Stop Detection Function

Since the oscillation stop detection function cannot be used if the main clock frequency is below 2MHz, set the OCD1 to OCD0 bits to “00b” (oscillation stop detection function disabled).

20.3.2 Oscillation Circuit Constants

Ask the maker of the oscillator to specify the best oscillation circuit constants on your system.

20.4 Timers

20.4.1 Timers X and Z

- Timers X and Z stop counting after reset. Set the value to these timers and prescalers before the count starts.
- Even if the prescalers and timers are read out in 16-bit units, these registers are read by 1 byte in the microcomputer. Consequently, the timer value may be updated during the period these two registers are being read.

20.4.2 Timer X

- Do not rewrite the TXMOD0 to TXMOD1 bits, the TXMOD2 and TXS bits simultaneously.
- In pulse period measurement mode, the TXEDG bit and TXUND bit in the TXMR register can be set to “0” by writing “0” to these bits by a program. However, these bits remain unchanged when “1” is written. When using the READ-MODIFY-WRITE instruction for the TXMR register, the TXEDG or TXUND bit may be set to “0” although these bits are set to while the instruction is executed. At the time, write “1” to the TXEDG or TXUND bit which is not supposed to be set to “0” with the MOV instruction.
- When changing to pulse period measurement mode from other mode, the contents of the TXEDG and TXUND bits are indeterminate. Write “0” to the TXEDG and TXUND bits before the count starts.
- The TXEDG bit may be set to “1” by the prescaler X underflow which is generated for the first time since the count starts.
- When using the pulse period measurement mode, leave two periods or more of the prescaler X immediately after count starts, and set the TXEDG bit to “0”.
- The TXS bit in the TXMR register has a function to instruct Timer X to start or stop counting, and a function to indicate the count starts or stops.
  “0” (count stops) can be read until the following count source is applied after “1” (count starts) is written to the TXS bit while the count is being stopped. If the following count source is applied, “1” can be read from the TXS bit. Do not access registers associated with Timer X (TXMR, PREX, TX, TCSS, TXIC registers) except for the TXS bit until “1” can be read from the TXS bit. The count starts at the following count source after the TXS bit is set to “1”.
  Also, when writing “0” (count stops) to the TXS bit during the count, Timer X stops counting at the following count source.
  “1” (count starts) can be read by reading the TXS bit until the count stops after writing “0” to the TXS bit. Do not access registers associated with Timer X other than the TXS bit until “0” can be read by the TXS bit after writing “0” to the TXS bit.

20.4.3 Timer Z

- Do not rewrite the TZMOD0 to TZMOD1 bits and the TZS bit simultaneously.
- In programmable one-shot generation mode and programmable wait one-shot generation mode, when setting the TZS bit in the TZMR register to “0” (stops counting) or setting the TZOS bit in the TZOC register to “0” (stops one-shot), the timer reloads the value of reload register and stops. Therefore, read the timer count value in programmable one-shot generation mode and programmable wait one-shot generation mode before the timer stops.
- The TZS bit in the TZMR register has a function to instruct Timer Z to start or stop counting, and a function to indicate the count starts or stops.
  “0” (count stops) can be read until the following count source is applied after “1” (count starts) is written to the TZS bit while the count is being stopped. If the following count source is applied, “1” can be read from the TZS bit. Do not access registers associated with Timer Z (TZMR, PREZ, TZSC, TZPR, TZOC, PUM, TCSC, TZIC registers) except for the TZS bit until “1” can be read from the TZS bit. The count starts at the following count source after the TZS bit is set to “1”.
  Also, when writing “0” (count stops) to the TZS bit during the count, Timer Z stops counting at the following count source.
  “1” (count starts) can be read by reading the TZS bit until the count stops after writing “0” to the TZS bit. Do not access registers associated with Timer Z other than the TZS bit until “0” can be read by the TZS bit after writing “0” to the TZS bit.

20.4.4 Timer C

Access the TC, TM0 and TM1 registers in 16-bit units.
The TC register can be read in 16-bit units. This prevents the timer value from being updated between the low-order byte and high-order byte are being read.

Example (when Timer C is read):

```
MOV.W    0090H,R0    ; Read out timer C
```

20.5 Serial Interface

- When reading data from the U0RB (i = 0, 1) register even in the clock asynchronous serial I/O mode or in the clock synchronous serial I/O mode. Ensure to read data in 16-bit unit. When the high-order byte of the U0RB register is read, the PER and FER bits in the U0RB register and the RI bit in the U0C1 register are set to “0”.

Example (when reading receive buffer register):

```
MOV.W    00A6H,R0    ; Read the U0RB register
```

- When writing data to the U0TB register in the clock asynchronous serial I/O mode with 9-bit transfer data length, write data high-order byte first, then low-order byte in 8-bit units.

Example (when reading transmit buffer register):

```
MOV.B    #XXH,00A3H  ; Write the high-order byte of U0TB register
MOV.B    #XXH,00A2H  ; Write the low-order byte of U0TB register
```

20.6 Clock Synchronous Serial I/O (SSU) with Chip Select

20.6.1 Access Registers Associated with SSU

After the conditions of “3 instructions or more after writing to the registers associated with SSU (00B8h to 00BFh)“ or “4 cycles or more after writing to them” are met, read those registers.

- An example to wait for 3 instructions or more

Program Example

```
        MOV.B   #00h,00BBh      ; Set the SSER register to “00h”.
        NOP
        NOP
        NOP
        MOV.B   00BBh,R0L
```

- An example to wait for 4 cycles or more

Program Example

```
        BCLR    4,00BBh         : Disable transmit
        JMP.B   NEXT
NEXT:
        BEST    3,00BBh         : Enable receive
```

20.7 A/D Converter

- Write to each bit (other than bit 6) in the ADCON0 register, each bit in the ADCON1 register, or the SMP bit in the ADCON2 register when the A/D conversion stops (before a trigger occurs).
  When the VCUT bit in the ADCON1 register is changed from “0” (VREF not connected) to “1” (VREF connected), wait for at least 1μs or longer before the A/D conversion starts.
- When changing A/D operating mode, select an analog input pin again.
- When using in one-shot mode. Ensure that the A/D conversion is completed and read the AD register. The IR bit in the ADIC register or the ADST bit in the ADCON0 register can determine whether the A/D conversion is completed.
- When using In repeat mode, use the undivided main clock for the CPU clock.
- If setting the ADST bit in the ADCON0 register to “0” (A/D conversion stops) by a program and the A/D conversion is forcibly terminated during the A/D conversion operation, the conversion result of the A/D converter will be indeterminate. If the ADST bit is set to “0” by a program, do not use the value of AD register.
- Connect 0.1μF capacitor between the AVCC/VREF pin and AVSS pin.

20.8 Flash Memory Version

20.8.1 CPU Rewrite Mode

20.8.1.1 Operating Speed

Before entering CPU rewrite mode (EW0 mode), select 5MHz or below for the CPU clock using the CM06 bit in the CM0 register and the CM16 to CM17 bits in the CM1 register. This usage note is not needed for EW1 mode.

20.8.1.2 Instructions Inhibited Against Use

The following instructions cannot be used in EW0 mode because the flash memory internal data is referenced: UND, INTO, and BRK instructions.

20.8.1.3 Interrupts

Table 20.1 lists the Interrupt in EW0 Mode and Table 20.2 lists the Interrupt in EW1 Mode.

Table 20.1 Interrupt in EW0 Mode

Mode	Status	When maskable interrupt request is acknowledged	When watchdog timer, oscillation stop detection and voltage monitor 2 interrupt request are acknowledged
EW0	During automatic erasing	Any interrupt can be used by allocating a vector to RAM	Once an interrupt request is acknowledged, the auto-programming or auto-erasing is forcibly stopped immediately and resets the flash memory. An interrupt process starts after the fixed period and the flash memory restarts. Since the block during the auto-erasing or the address during the auto-programming is forcibly stopped, the normal value may not be read. Execute the auto-erasing again and ensure the auto-erasing is completed normally. Since the watchdog timer does not stop during the command operation, the interrupt request may be generated. Reset the watchdog timer regularly.
	Automatic writing		

NOTES:

1. Do not use the address match interrupt while the command is executed because the vector of the address match interrupt is allocated on ROM.
2. Do not use the non-maskable interrupt while Block 0 is automatically erased because the fixed vector is allocated Block 0.

Table 20.2 Interrupt in EW1 Mode

Mode	Status	When maskable interrupt request is acknowledged	When watchdog timer, oscillation stop detection and voltage monitor 2 interrupt request are acknowledged
EW1	During automatic erasing (erase-suspend function is enabled)	The auto-erasing is suspended after td(SR-ES) and the interrupt process is executed. The auto-erasing can be restarted by setting the FMR41 bit in the FMR4 register to “0”(erase restart) after the interrupt process completes.	Once an interrupt request is acknowledged, the auto-programming or auto-erasing is forcibly stopped immediately and resets the flash memory. An interrupt process starts after the fixed period and the flash memory restarts. Since the block during the auto-erasing or the address during the auto-programming is forcibly stopped, the normal value may not be read. Execute the auto-erasing again and ensure the auto-erasing is completed normally. Since the watchdog timer does not stop during the command operation, the interrupt request may be generated. Reset the watchdog timer regularly using the erase-suspend function.
	During automatic erasing (erase-suspend function is disabled)	The auto-erasing has a priority and the interrupt request acknowledgement is waited. The interrupt process is executed after the auto-erasing completes. Refer to **20.8.1.9 Interrupt Request Generation during Auto-erase Operation in EW1 Mode**.	
	Auto programming	The auto-programming has a priority and the interrupt request acknowledgement is waited. The interrupt process is executed after the auto-programming completes.	

NOTES:

1. Do not use the address match interrupt while the command is executed because the vector of the address match interrupt is allocated on ROM.
2. Do not use the non-maskable interrupt while Block 0 is automatically erased because the fixed vector is allocated Block 0.

20.8.1.4 How to Access

Write “0” to the corresponding bits before writing “1” when setting the FMR01, FMR02, or FMR11 bit to “1”. Do not generate an interrupt between writing “0” and “1”.

20.8.1.5 Rewriting User ROM Area

In EW0 Mode, if the power supply voltage drops while rewriting any block in which the rewrite control program is stored, the flash memory may not be able to be rewritten because the rewrite control program cannot be rewritten correctly. In this case, use standard serial I/O mode.

20.8.1.6 Program

Do not write additions to the already programmed address.

20.8.1.7 Reset Flash Memory

When setting the FMSTP bit in the FMR0 register to “1” (flash memory stops) during erase-suspend in EW1 mode, a CPU stops and cannot return. Do not set the FMSTP bit to “1”.

20.8.1.8 Entering Stop Mode or Wait Mode

Do not enter stop mode or wait mode during erase-suspend.

20.8.1.9 Interrupt Request Generation during Auto-erase Operation in EW1 Mode

When an interrupt request is generated during erasing with FMR01 = 1 (CPU rewrite mode enabled) in FMR0 register, FMR11 = 1 (EW1 mode) in FMR1 register and FMR40 = 0 (disable erase suspend function) in FMR4 register, the CPU may not operate properly.
Select any of the following 3 processes as a software countermeasure:

(a) Disable an interrupt by setting the priority level of all maskable interrupts to level 0. Note that disabling the interrupts by the I flag will not be in the software countermeasure
(b) Set the FMR40 = 1 (enable erase suspend function) and the I flag = 1 (enable interrupt) when using the FMR11 = 1 (EW1 mode)
(c) Use EW0 mode.

20.9 Noise

20.9.1 Insert a bypass capacitor between VCC and VSS pins as the countermeasures against noise and latch-up

Connect the bypass capacitor (at least 0.1μF) using the shortest and thickest as possible.

20.9.2 Countermeasures against Noise Error of Port Control Registers

During severe noise testing, mainly power supply system noise, and introduction of external noise, the data of port related registers may be changed.
As a firmware countermeasure, it is recommended to periodically reset the port registers, port direction registers and pull-up control registers. However, examine fully before introducing the reset routine as conflicts may be created between this reset routine and interrupt routines.

21. Precaution for On-chip Debugger

When using the on-chip debugger to develop the R8C/14 and R8C/15 groups program and debug, pay the following attention.

(1) Do not use from OC000h address to OC7FFh because the on-chip debugger uses these addresses.
(2) Do not set the address match interrupt (the registers of AIER, RMAD0, RMAD1 and the fixed vector tables) in a user system.
(3) Do not use the BRK instruction in a user system.
(4) The stack pointer with up to 8 bytes is used during the user program break. Therefore, save space of 8 bytes for the stack area.

Connecting and using the on-chip debugger has some peculiar restrictions. Refer to each on-chip debugger manual for on-chip debugger details.

Appendix 1. Package Dimensions

JEITA Package Code	RENESAS Code	Previous Code	MASS[Typ.]
P-LSSOP20-4.4x6.5-0.65	PLSP0020JB-A	20P2F-A	0.1g

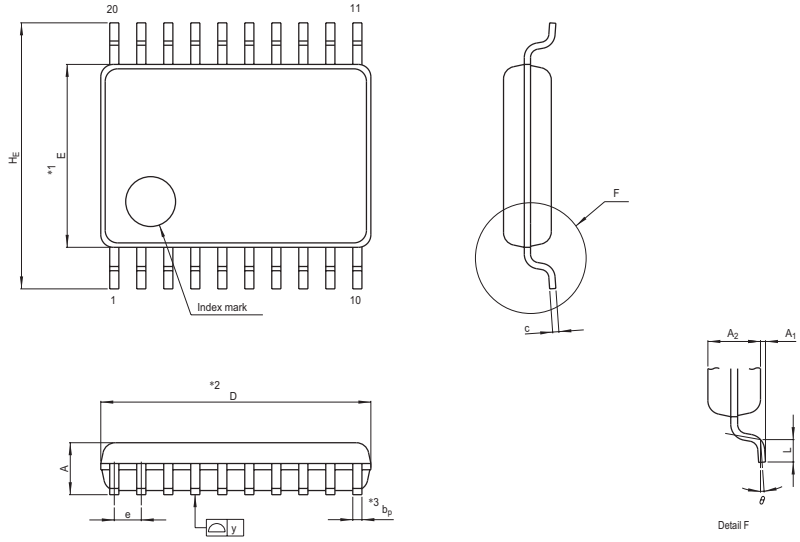

NOTE)
1. DIMENSIONS "*1" AND "*2" DO NOT INCLUDE MOLD FLASH.
2. DIMENSION "*3" DOES NOT INCLUDE TRIM OFFSET.

Reference Symbol	Dimension in Millimeters		
	Min	Nom	Max
D	6.4	6.5	6.6
E	4.3	4.4	4.5
A_2	—	1.15	—
A	—	—	1.45
A_1	0	0.1	0.2
b_p	0.17	0.22	0.32
c	0.13	0.15	0.2
θ	0°	—	10°
H_E	6.2	6.4	6.6
e	0.53	0.65	0.77
y	—	—	0.10
L	0.3	0.5	0.7

Appendix 2. Connecting Example between Serial Writer and On-Chip Debugging Emulator

Appendix Figure 2.1 shows the Connecting Example with M16C Flash Starter (M3A-0806) and Appendix Figure 2.2 shows the Connecting Example with Emulator E8 (R0E000080KCE00).

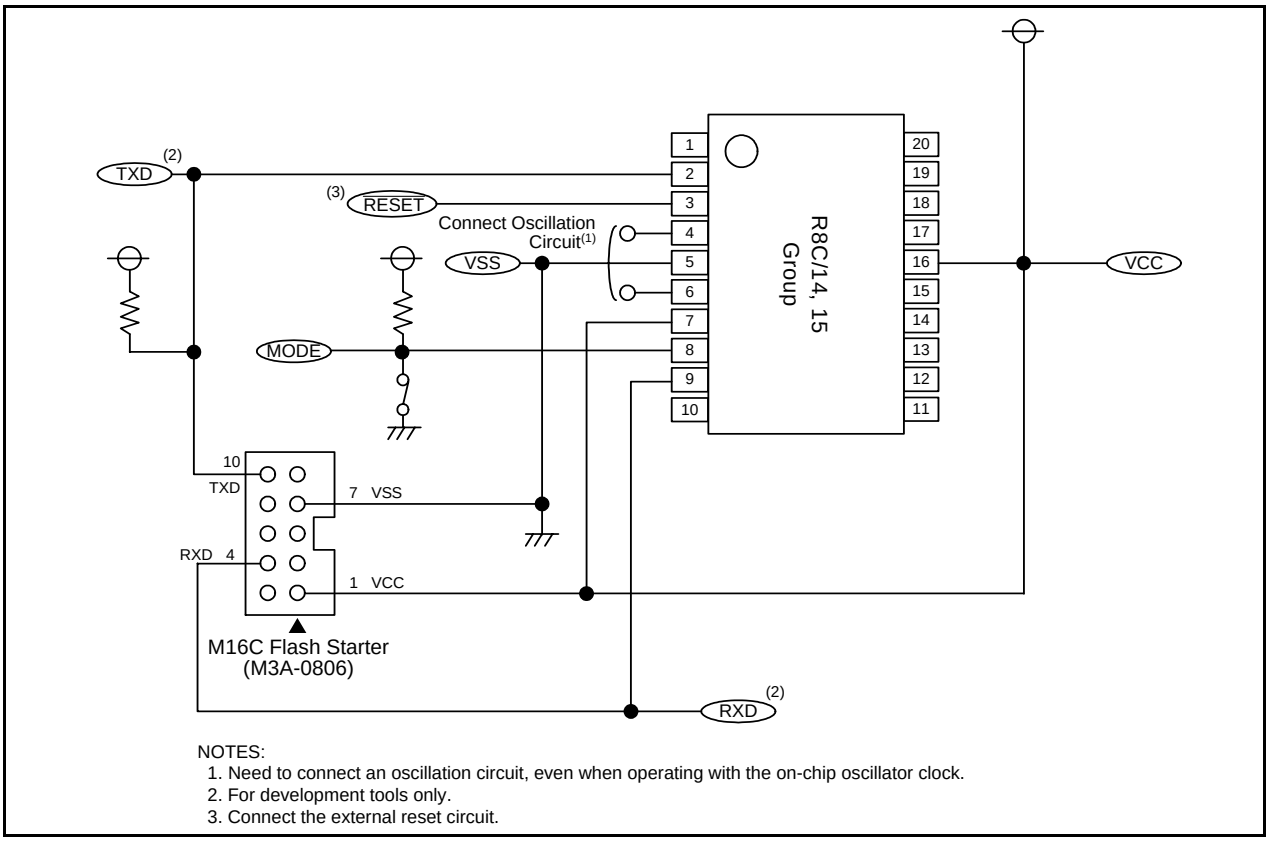

Appendix Figure 2.1 Connecting Example with M16C Flash Starter (M3A-0806)

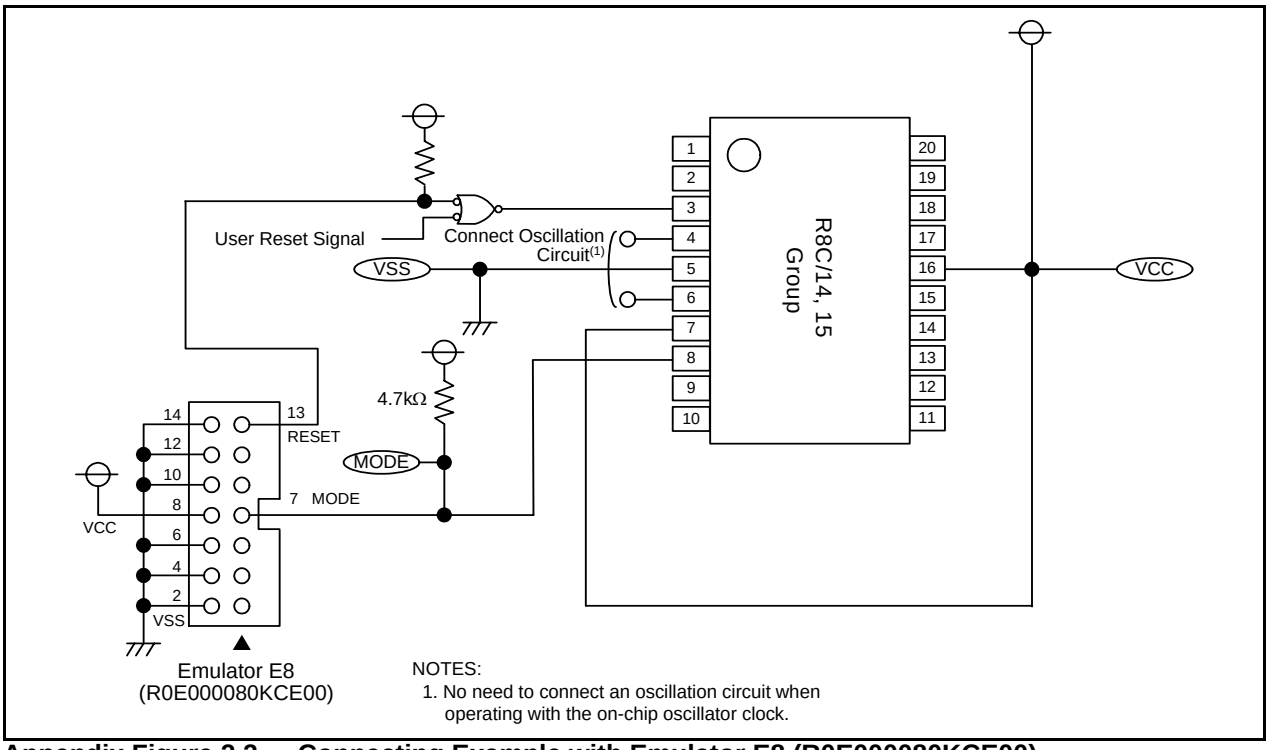

Appendix Figure 2.2 Connecting Example with Emulator E8 (R0E000080KCE00)

Appendix 3. Example of Oscillation Evaluation Circuit

Appendix Figure 3.1 shows the Example of Oscillation Evaluation Circuit.

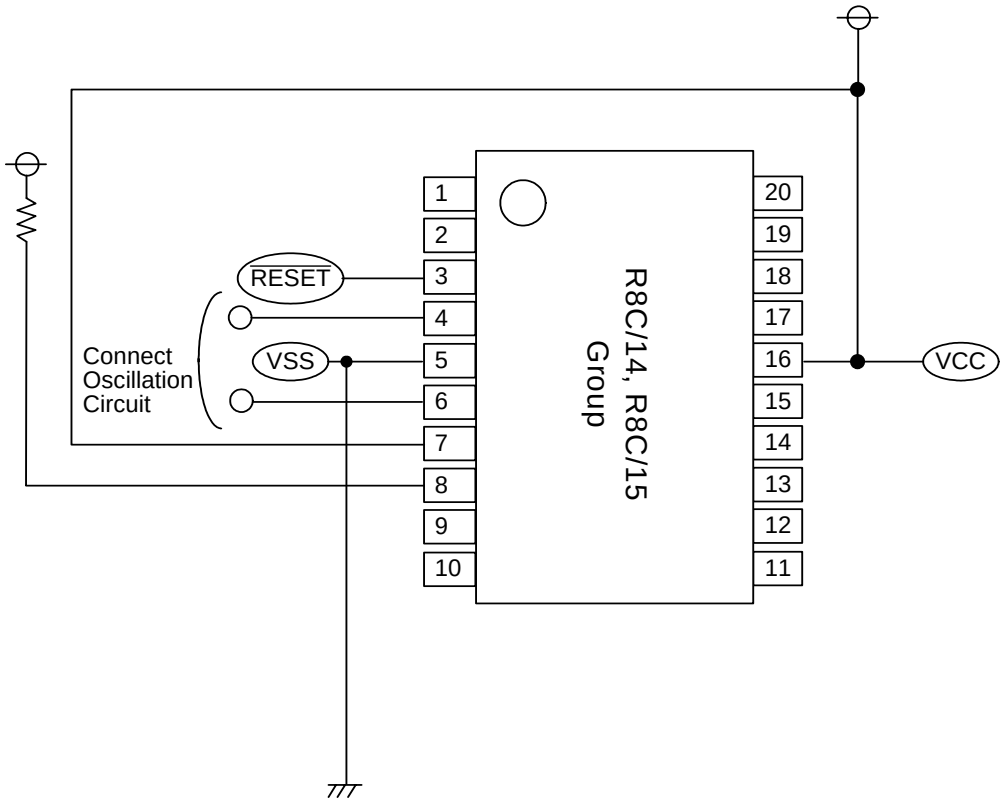

NOTES:
1. Set a program before evaluating.

Appendix Figure 3.1 Example of Oscillation Evaluation Circuit

Register Index

A

AD 171
ADCON0 170
ADCON1 170
ADCON2 171
ADIC 61
AIER 77

C

CM0 40
CM1 41
CMP0IC 61
CMP1IC 61
CSPR 80

D

DRR 185

F

FMR0 200
FMR1 201
FMR4 201

H

HRA0 43
HRA1 44
HRA2 44

I

INT0F 69
INT0IC 62
INT1IC 61
INT3IC 61
INTEN 69

K

KIEN 75
KUPIC 61

O

OCD 42
OFS 79, 196

P

P1 184
P3 184
P4 184
PD1 184
PD3 184
PD4 184
PM0 35
PM1 36
PRCR 55
PREX 86
PREZ 100
PUM 101
PUR0 185
PUR1 185

R

RMAD0 77
RMAD1 77

S

S0RIC 61
S0TIC 61
SSCRH 142
SSCRL 143
SSER 145
SSMR 144
SSMR2 147
SSRDR 148
SSSR 146
SSTDR 148
SSUAIC 61

T

TC 117
TCC0 118
TCC1 119
TCIC 61
TCOUT 120
TCSS 86, 102
TM0 117
TM1 117
TX 86
TXIC 61
TXMR 85
TZIC 61
TZMR 99
TZOC 101
TZPR 100
TZSC 100

U

U0BRG 127
U0C0 128
U0C1 129
U0MR 128
U0RB 127
U0TB 127
UCON 129

V

VCA1 28
VCA2 28
VW1C 29
VW2C 30

W

WDC 79
WDTR 80
WDTS 80

REVISION HISTORY	R8C/14 Group, R8C/15 Group Hardware

Rev.	Date	Description	
		Page	Summary
0.10	May 17, 2004	–	First Edition issued
0.20	Jul 12, 2004	–	Rev.0.20 issued
0.30	Aug 06, 2004	all pages	Words standardized (on-chip oscillator, serial interface, SSU)
		2	Table 1.1 revised
		3	Table 1.2 revised
		9	Table 1.5 revised
		10	Table 1.6 added
		14,15	“Address Break” in Figures 3.1 and 3.2 ; notes added
		16	Table 4.1, HRA2 Register at 0022h added ; NOTE2 to 6 revised
		18	Table 4.3 the value after reset to FFh at 009Ch to 009Fh revised
		19	Tabel 4.4, the value after reset to FFh at 009Ch to 009Fh revised ; NOTES added
		20-25	Compositions and contents of “5. Reset” modified
		26-35	Compositions and contents of “6. Voltage Detection Circuit” modified
		37	Figure 7.2, function of b0 revised
		40	Figure 9.1 revised
		41	Figure 9.2, “System” at CM06 bit added
		42	Figure 9.3, “System” at CM16 and CM17 bits added
		44	Figure 9.5 revised
		47	9.2.2, “The oscillation starts...HRA2 registers” added
		48	9.3.1 added
			9.3.3 “The clock...divided-by-i”added
		52	Table 9.4 revised
		60	11.1.3.4, “Address Break Interrup” added ; the referred distination to “20. On-Chip Debugger” revised
		61	Table 11.1, some referred distinations revised
		62	Table 11.2, some referred distinations revised
		68	Figures 11.7 and 11.8 added
		72	11.2.1, “The INT0 pin...timer Z” added
		74	11.2.3, “The INT0 pin...CNTR01 pin” added
		75	11.2.4, “The INT3 pin is used with the TCIN pin” added
		80-84	Compositions and contents of “12. Watchdog Timer” modified
		87	Figure 13.2 revised
		89	Table 13.2 revised
		90	Table 13.3 revised
		91	Figure 13.5 revised
		92	Table 13.4 revised
		93	Figure 13.6 revised
		94	Table 13.5 revised
		95	Figure 13.7 revised
		97	Table 13.6 revised
		98	Figure 13.9 revised
		99	Figure 13.10 revised
		100	13.2 revised
		105	Table 13.7 revised
		107	Table 13.8 revised

Rev.	Date	Description	
		Page	Summary
0.30	Aug 06, 2004	110	Table 13.9 revised
		112	Figure 13.20 revised
		114	Table 13.10 revised
		118	Figure 13.25 revised
		119	Figure 13.26 revised
		121	Figure 13.28 revised
		123	Table 13.11 revised
		125	Table 13.12 revised
		130	Figure 14.4 revised
		131	Figure 14.5 revised
		136	14.1.3 revised
		138	Table 14.5, NOTES revised
		140	Figure 14.10 revised ; 14.2.1 “input” added
		141	14.2.2 added
		143	Figure 15.1 revised
		144	Figure 15.2 revised
		146	Figure 15.4 revised
		148	Figure 15.6 revised
		152	Figure 15.9 revised
		154	15.3 revised
		159	Figure 15.14 revised
		162	15.6 revised
		164	15.6.2 revised
		165	Figure 15.18 revised
		167	Figure 15.19 revised
		171	Figure 16.2 revised
		174	Figure 16.4 revised
		175	Table 16.3 revised
		176	Figure 16.5 revised
		178	17.1.4 revised
		179	Figure 17.1 revised
		180	Figure 17.2 revised
		184	Figure 17.8 revised
		185	Table 17.1 revised
		186	Table 18.1 revised
		188	18.2 revised
		89	Figure 18.2, NOTES revised
		190	Figure 18.3 ID5 and 6 revised
		191	18.3.2 revised ; “After Reset” revised to “Before Shipment”
		193	18.4.1 and 18.4.2 revised
		195	18.4.2.11 and 18.4.2.12 revised
			Figure 18.5 revised
		196	Figure 18.6 revised
		198	Figure 18.9 revised
		204	Table 18.6 revised
		210-223	“19. Electrical Characteristics” added
		230	21.1 “Stop Mode and Wait Mode” revised
		240	21.7.1.8 revised
			21.7.1.9 added
		244	“Appendix 2. Connecting Example between Serial Writer and On-Chip Debugging Emulator” added
		247	“Appendix 3. Example of Oscillation Evaluation Circuit” added

REVISION HISTORY	R8C/14 Group, R8C/15 Group Hardware

Rev.	Date	Description	
		Page	Summary
1.00	Feb 25, 2005	2-3	Tables 1.1 and 1.2 revised
		5	Table 1.3 and figure 1.2 revised
		6	Table 1.4 and figure 1.3 revised
		7-8	Figures 1.4 and 1.5 revised
		16	Tabel 4.1, The value after reset to 000XXXXXb to 00011111b at 000Fh; and the value after reset to 00001000b to 0000X000b and 01001001b to 0100X001b at 0036h revised
		18	Tabel 4.3, The value after reset to 0000h at 009Ch to 009Dh revised; NOTES2 added, and the value after reset to 00h at 00BCh revised
		20	Figure 5.1 revised
		22	5.1.1 (2) and 5.1.2 (4) revised
		24	5.2 revised
			Figure 5.6 revised
		25	5.3 revised
		26	Table 6.1 revised
		27	Figures 6.1 and 6.2 revised
		29	Figure 6.4 revised
		30	Figure 6.5 revised
		31	Figure 6.6 revised
		32	6.1.1 revised
		33	Table 6.2 and figure 6.7 revised
		34	Table 6.3 revised
		35	Figure 6.8 revised
		37	Figure 7.2 revised
		39	Table 9.1 revised; NOTE2 added
		40	Figure 9.1 revised
		41	Figure 9.2 revised
		42	Figure 9.3 revised
		44	Figure 9.5 revised
		51	Table 9.3 revised
		52	Table 9.4 revised
		55	9.5 and 9.5.1 revised
			Table 9.5 revised
		60	11.1.3.5 revised
		61	Table 11.1 revised
		68	11.1.6.7 revised
		71	Figure 11.11 “INTEN Register” revised
		78-79	11.4 “Address Match Interrupt”, Table 11.6, 11.7 and Figure 11.19 added
		81	Figure 12.2 “WDC Register” revised
		83	Table 12.1 revised
		89-96	Table 13.2, 13.3, 13.4, 13.5 and 13.6 revised; “Write to Timer” revised
		104	Table 13.7 revised
		106-113	Table 13.8, 13.9 and 13.10 revised
		118	Figure 13.26 revised
		126	Figure 14.1 revised
		129	Figure 14.4 “U0C0 Register” revised
		130	Figure 14.5 “UCON Register” revised
		131	14.1 revised
		137	Table 14.6 revised

REVISION HISTORY	R8C/14 Group, R8C/15 Group Hardware

Rev.	Date	Description	
		Page	Summary
1.00	Feb 25, 2005	141	Table 15.1 NOTE2 added
		145	Figure 15.4 NOTES added
		147	Figure 15.6 revised; The value after reset to 00h
		149	Figure 15.8 revised
		152	15.2 revised; “15.2 SS Shift Register” added and 15.2 revised to 15.5.2
		157	Figure 15.13 NOTE2 added
		158	Figure 15.14 revised
		160	15.5.4 revised
		162	15.6 revised
		163	Figure 15.17 revised
		164	15.6.2 revised
		168	15.6.4 revised
		169	Table 16.1 revised
		171-176	Figures 16.2, 16.4 and 16.5 revised
		178	17.1, 17.2 and 17.3 revised; Tables 17.1, 17.2 and 17.3 added
		185	Table 17.4 revised
			Figure 17.9 added
		188-189	Figures 18.1 and 18.2 revised
		191	18.3.2 revised
		192	Table 18.3 revised
		202	Figure 18.12 revised
		207	Figure 18.14 revised
		211	Table 19.3 revised
		212	Table 19.4 and 19.5 revised
		213	Figure 19.2, Tables 19.6 and 19.7 revised
		214	Tables 19.8 and 19.9 revised
		215	Table 19.10, 19.11 revised and Table 19.12 added
		216-218	Figures 19.4, 19.5 and 19.6 added
		219	Table 19.13 revised
		220	Table 19.14 revised
		221, 225	Table 19.16 and 19.23 revised: Table title ”INT2” → “INT1”
		223	Table 19.20 NOTE revised
		224	Table 19.21 revised
		227	20.1.1 and 20.1.2 revised
		232	20.4.2 revised
		233	20.4.3 revised
		235	20.6 added
		236	20.7 revised
		239	20.8.1.7 and 20.8.1.8 revised
		241	“20. On-chip Debugger” deleted
		242	Appendix Package Dimensions revised
		243	Appendix Figure 2.1 revised; “USB Flash Writer” deleted and “M16C Flash Starter” NOTE3 added

REVISION HISTORY	R8C/14 Group, R8C/15 Group Hardware

Rev.	Date	Description	
		Page	Summary
2.00	Jan 12, 2006	1	1. Overview; "20-pin plastic molded LSSOP or SDIP" → "20-pin plastic molded LSSOP" revised
		2	Table 1.1 Performance Outline of the R8C/14 Group; Package: "20-pin plastic molded SDIP" deleted
		3	Table 1.2 Performance Outline of the R8C/15 Group; Package: "20-pin plastic molded SDIP" deleted, Flash Memory: (Data area) → (Data flash) (Program area) → (Program ROM) revised
		4	Figure 1.1 Block Diagram; "Peripheral Function" added, "System Clock Generation" → "System Clock Generator" revised
		5, 6	Table 1.3 Product Information of R8C/14 Group, Table 1.4 Product Information of R8C/15 Group; revised. Figure 1.2 Part Number, Memory Size and Package of R8C/14 Group, Figure 1.3 Part Number, Memory Size and Package of R8C/15 Group; Package type: "DD : PRDP0020BA-A" deleted
		8	Figure 1.5 PRDP0020BA-A Package Pin Assignment (top view) deleted Table 1.5 Pin Description; Timer C: "CMP0_0 to CMP0_3, CMP1_0 to CMP1_3" → "CMP0_0 to CMP0_2, CMP1_0 to CMP1_2" revised
		10	Figure 2.1 CPU Register; "Reserved Area" → "Reserved Bit" revised
		12	2.8.10 Reserved Area; "Reserved Area" → "Reserved Bit" revised
		13	Figure 3.1 Memory Map of R8C/14 Group revised
		14	3.2 R8C/15 Group, Figure 3.2 Memory Map of R8C/15 Group revised
		15	Table 4.1 SFR Information(1); 0009h: "XXXXXX00b" → "00h" 000Ah: "00XXX000b" → "00h" 001Eh: "XXXXX000b" → "00h"
		17	Table 4.3 SFR Information(3); 0085h: "Prescaler Z" → "Prescaler Z Register" 0086h: "Timer Z Secondary" → "Timer Z Secondary Register" 0087h: "Timer Z Primary" → "Timer Z Primary Register" 008Ch: "Prescaler X" → "Prescaler X Register" 008Dh: "Timer X" → "Timer X Register" 0090h, 0091h: "Timer C" → "Timer C Register" revised
		20	Figure 5.3 Reset Sequence revised
		23	5.2 Power-On Reset Function; "When a capacitor is connected to ... 0.8VCC or more." added
		29	Figure 6.5 VW1C Register revised
		30	Figure 6.6 VW2C Register NOTE10 added

Rev.	Date	Description	
		Page	Summary
2.00	Jan 12, 2006	32	Table 6.2 Setting Procedure of Voltage Monitor 1 Reset Associated Bit revised
		33	Table 6.3 Setting Procedure of Voltage Monitor 2 Interrupt and Voltage Monitor 2 Reset Associated Bit revised
		37	Table 8.2 Bus Cycles for Access Space of the R8C/15 Group added, Table 8.3 Access Unit and Bus Operation; "SFR" → "SFR, Data flash", "ROM/RAM" → "ROM (Program ROM), RAM" revised
		38	Table 9.1 Specification of Clock Generation Circuit NOTE2 deleted
		39	Figure 9.1 Clock Generation Circuit revised
		40	Figure 9.2 CM0 Register NOTE2 revised
		42	Figure 9.4 OCD Register NOTES 3, 4 revised
		43	Figure 9.5 HRA0 Register NOTE2 revised
		45	9.1 Main Clock; "After reset, ..." → "During reset and after reset, ..." revised
		46	9.2.1 Low-Speed On-Chip Oscillator Clock; "The application ... to accommodate the frequency range." → "The application ... for the frequency change."
		47	9.3.2 CPU Clock; "When changing the clock source ... the OCD2 bit." deleted
		48	9.4.1 Normal Operating Mode; "... into three modes" → "... into four modes" revised Table 9.2 Setting and Mode of Clock Associated Bit revised
		49	9.4.1.1 High-Speed Mode, 9.4.1.2 Medium-Speed Mode; "Set the CM06 bit to "1" ... on-chip oscillator mode." deleted 9.4.1.3 High-Speed, Low-Speed On-Chip Oscillator Mode; "9.4.1.3 On-Chip Oscillator Mode" → "9.4.1.3 High-Speed, Low-Speed On-Chip Oscillator Mode" revised, "Set the CM06 bit to "1" ... high-speed and medium-speed." deleted
		52	Figure 9.8 State Transition to Stop and Wait Modes; "Figure 9.8 State Transition to Stop and Wait Modes" → "Figure 9.8 State Transition of Power Control" revised Figure 9.9 State Transition in Normal Operating Mode deleted
		53	9.5.1 How to Use Oscillation Stop Detection Function; "• This function cannot ... is 2 MHz or below. ..." → "• This function cannot ... is below 2 MHz. ..." revised
		54	Figure 9.9 Procedure of Switching Clock Source From Low-Speed On-Chip Oscillator to Main Clock revised
		55	Figure 10.1 PRCR Register "00XXX000b" → "00h" revised
		68	Figure 11.10 Judgement Circuit of Interrupts Priority Level NOTE1 deleted
		69	Figure 11.11 INTEN and INT0F Registers; INT0F Register "XXXXX000b" → "00h" revised

Rev.	Date	Description	
		Page	Summary
2.00	Jan 12, 2006	76	11.4 Address Match Interrupt; "... , do not use an address match interrupt in a user system." → "... , do not set an address match interrupt (the registers of AIER, RMAD0, RMAD1 and the fixed vector tables) in a user system." revised
		77	Figure 11.19 AIER, RMAD0 to RMAD1 Registers; AIER Register revised
		79	Figure 12.2 OFS and WDC Registers; • Option Function Select Register NOTE1 revised, NOTE2 added • Watchdog Timer Control Register NOTE1 deleted
		83	Table 13.1 Functional Comparison of Timers; "Decrement" → "Increment"
		84	Figure 13.1 Block Diagram of Timer X revised
		87	Table 13.2 Specification of Timer Mode; • "$\overline{\text{INT1}}$/CNTR0 Signal Pin Function" → "$\overline{\text{INT10}}$/CNTR00, $\overline{\text{INT11}}$/CNTR01 Pin Function" revised • "• When writing ... registers (the data is transferred to the counter when the following count source is input)."→ "• When writing ... registers at the following count source input and the data is transferred to the counter at the second count source input and the count re-starts at the third count source input." revised
		88	Table 13.3 Specification of Pulse Output Mode; • "$\overline{\text{INT1}}$/CNTR0 Signal Pin Function" → "$\overline{\text{INT10}}$/CNTR00 Pin Function" revised • "• When writing ... registers (the data is transferred to the counter when the following count source is input)."→ "• When writing ... registers at the following count source input and the data is transferred to the counter at the second count source input and the count re-starts at the third count source input." revised • NOTE1 added
		90, 92, 95	Table 13.4 Specification of Event Counter Mode, Table 13.5 Specification of Pulse Width Measurement Mode, Table 13.6 Specification of Pulse Period Measurement Mode; • "$\overline{\text{INT1}}$/CNTR0 Signal Pin Function" → "$\overline{\text{INT10}}$/CNTR00, $\overline{\text{INT11}}$/CNTR01 Pin Function" revised • "• When writing ... registers (the data is transferred to the counter when the following count source is input)."→ "• When writing ... registers at the following count source input and the data is transferred to the counter at the second count source input and the count re-starts at the third count source input." revised
		98	Figure 13.11 Block Diagram of Timer Z; "Peripheral Data Bus" → "Data Bus" revised
		101	Figure 13.14 TZOC and PUM Registers; Timer Z Output Control Register "Stops counting" → "One-shot stops", "Starts counting" → "One-shot starts" revised

Rev.	Date	Description	
		Page	Summary
2.00	Jan 12, 2006	103	Table 13.7 Specification of Timer Mode; "• When writing ... registers (the data is transferred to the counter when the following count source is input) while the TZWC bit is set to "0" (writing to the reload register and counter simultaneously)." → "• When writing ... registers at the following count source input and the data is transferred to the counter at the second count source input and the count re-starts at the third count source input." revised
		108, 112	Table 13.9 Specification of Programmable One-Shot Generation Mode, Table 13.10 Specification of Programmable Wait One-Shot Generation Mode Specifications; Count Operation; "• When a count completes, ..." → "• When a count stops, ..." revised
		112	Table 13.10 Specification of Programmable Wait One-Shot Generation Mode Specifications; NOTE1, 2, 3 revised
		116	Figure 13.25 Block Diagram of CMP Waveform Output Unit revised
		123	Table 13.12 Specification of Output Compare Mode NOTE1 revised
		124	Figure 13.31 Operating Example of Timer C in Output Compare Mode revised
		127	Figure 14.3 U0TB, U0RB and U0BRG Registers; U0TB and U0RB Registers revised, U0BRG Register NOTE3 added
		128	Figure 14.4 U0MR and U0C0 Registers; U0C0 Register NOTE1 added
		136	Table 14.5 Registers to Be Used and Settings in UART Mode; U0BRG: "–" → "0 to 7" revised
		169	Figure 16.1 Block Diagram of A/D Converter "Vref" → "Vcom" revised
		170, 173, 175	Figure 16.2 ADCON0 and ADCON1 Registers, Figure 16.4 ADCON0 and ADCON1 Registers in One-Shot Mode, Figure 16.5 ADCON0 and ADCON1 Registers in Repeat Mode; ADCON0 Register revised
		176 to 178	Figure 16.6 Timing Diagram of A/D Conversion revised and 16.4 A/D Conversion Cycles to 16.6 Inflow Current Bypass Circuit added
		180, 181	Figure 17.1 Configuration of Programmable I/O Ports (1), Figure 17.2 Configuration of Programmable I/O Ports (2); NOTE1 added
		182	Figure 17.3 Configuration of Programmable I/O Ports (3) NOTE4 added
		184	Figure 17.5 PD1, PD3 and PD4 Registers, Figure 17.6 P1, P3 and P4 Registers; NOTE1, 2 revised
		185	Figure 17.7 PUR0 and PUR1 Registers revised
		186 to 189	17.4 Port setting added, Table 17.4 Port P1_0/$\overline{KI0}$/AN8/CMP0_0 Setting to Table 17.17 Port P4_5/$\overline{INT0}$ Setting added
		191	Table 18.1 Flash Memory Version Performance; Program and Erase Endurance: (Program area) → (Program ROM), (Data area) → (Data flash) revised

Rev.	Date	Description	
		Page	Summary
2.00	Jan 12, 2006	193	18.2 Memory Map; "The user ROM ... area ... Block A and B." → "The user ROM ... area (program ROM) ... Block A and B (data flash)." revised Figure 18.1 Flash Memory Block Diagram for R8C/14 Group revised
		194	Figure 18.2 Flash Memory Block Diagram for R8C/15 Group revised
		196	Figure 18.4 OFS Register; NOTE1 revised, NOTE2 added
		200	Figure 18.5 FMR0 Register; NOTE6 revised
		201	Figure 18.6 FMR1 and FMR4 Registers; FMR4 Register NOTE2 revised
		202	Figure 18.7 Timing on Suspend Operation added
		203	Figure 18.8 How to Set and Exit EW0 Mode and Figure 18.9 How to Set and Exit EW1 Mode revised
		208	Figure 18.13 Block Erase Command (When Using Erase-Suspend Function) revised
		211	Figure 18.14 Full Status Check and Handling Procedure for Each Error revised
		212 to 213	18.5 Standard Serial I/O Mode revised
		214	Figure 18.15 Pin Connections for Standard Serial I/O Mode 3; Figure title revised
		215	Figure 18.16 Pin Process in Standard Serial I/O Mode → Figure 18.16 Pin Process in Standard Serial I/O Mode 2 revised, Figure 18.17 Pin Process in Standard Serial I/O Mode 3 added
		219	Table 19.4 Flash Memory (Program ROM) Electrical Characteristics; • NOTES 1 to 7 added • "Topr" = "Ambient temperature"
		220	Table 19.5 Flash Memory (Data flash Block A, Block B) Electrical Characteristics; • revised • "Topr" = "Ambient temperature"
		221	Figure 19.2 Time delay from Suspend Request until Erase Suspend revised
		222	Table 19.8 Reset Circuit Electrical Characteristics (When Using Voltage Monitor 1 Reset) NOTE2 revised. Table 19.12 Timing Requirements of Clock Synchronous Serial I/O (SSU) with Chip Select revised.
		223	Table 19.10 High-speed On-Chip Oscillator Circuit Electrical Characteristics revised
		224	Figure 19.4 I/O Timing of Clock Synchronous Serial I/O (SSU) with Chip Select (Master) revised
		225	Figure 19.5 I/O Timing of Clock Synchronous Serial I/O (SSU) with Chip Select (Slave) revised
		227	Table 19.13 Electrical Characteristics (1) [VCC = 5V] revised

Rev.	Date	Description	
		Page	Summary
2.00	Jan 12, 2006	228	Table 19.14 Electrical Characteristics (2) [Vcc = 5V] NOTE1 deleted
		229	Table 19.18 Serial Interface; "35" → "50", "80" → "50"
		231	Table 19.20 Electrical Characteristics (3) [VCC = 3V] revised
		232	Table 19.21 Electrical Characteristics (4) [Vcc = 3V] NOTE1 deleted
		233	Table 19.25 Serial Interface; "55" → "70", "160" → "80"
		239	20.3.1 Oscillation Stop Detection Function; "Since ... is 2MHz or below, .." → "Since ... is below 2 MHz, .." revised 20.3.2 Oscillation Circuit Constants added
		240	20.4.2 Precautions on Timer X; '• ... When writing "1" (count starts) to ... writing "1" to the TXS bit.' → '• ... "0" (count stops) can be ... after the TXS bit is set to "1".' revised
		241	20.4.3 Precautions on Timer Z; • "• In programmable ... "0" and the timer ..." → "• In programmable ... "0" (stops counting) or setting the TZOS bit in the TZOC register to "0" (stops one-shot), the timer ..." revised • '• ... When writing "1" (count starts) to ... writing "1" to the TZS bit.' → '• ... "0" (count stops) can be ... after the TZS bit is set to "1".' revised
		246	Table 20.2 Interrupt in EW1 Mode revised
		247	20.8.1.9 Interrupt Request Generation During Auto-erase Operation in EW1 Mode added
		249	21. Precaution for On-chip Debugger (2) revised, (4) added
		250	Appendix 1. Package Dimensions; Package "PRDP0020BA-A" deleted
		251	Appendix Figure 2.1 Connecting Example with M16C Flash Starter (M3A-0806); • NOTE1 revised • Pulled up added
2.10	Jan 19, 2006	223	Table 19.10 High-speed On-Chip Oscillator Circuit Electrical Characteristics; High-Speed On-Chip Oscillator Frequency Temperature • Supplay Voltage Dependence 0 to +60 °C / 5 V ± 5 % Standard Max. "8.16" → "8.56"
		247	20.8.1.9 Interrupt Request Generation during Auto-erase Operation in EW1 Mode; (b) revised

R8C/14 Group, R8C/15 Group Hardware Manual

Publication Data : Rev.0.10 May 17, 2004
Rev.2.10 Jan 19, 2006

Published by : Sales Strategic Planning Div.
Renesas Technology Corp.

© 2006. Renesas Technology Corp., All rights reserved. Printed in Japan

R8C/14 Group, R8C/15 Group
Hardware Manual

Renesas Electronics Corporation
1753, Shimonumabe, Nakahara-ku, Kawasaki-shi, Kanagawa 211-8668 Japan

REJ09B0164-0210

Mouser Electronics

Authorized Distributor

Click to View Pricing, Inventory, Delivery & Lifecycle Information:

Renesas Electronics:
R5F21152SP#U0 R5F21153SP#U0 R5F21144SP#U0 R5F21154DSP#U0 R5F21142SP#U0 R5F21154SP#U0 R5F21153DSP#U0