Datasheet

S3A1 Microcontroller Group

Datasheet

Renesas Synergy™ Platform

Synergy Microcontrollers
S3 Series

All information contained in these materials, including products and product specifications, represents information on the product at the time of publication and is subject to change by Renesas Electronics Corp. without notice. Please review the latest information published by Renesas Electronics Corp. through various means, including the Renesas Electronics Corp. website (http://www.renesas.com).

Renesas Electronics
www.renesas.com

Rev.1.20 Oct 2018

High efficiency 48-MHz Arm® Cortex®-M4 core, 1-MB code flash memory, 192-KB SRAM, Segment LCD Controller, Capacitive Touch Sensing Unit, USB 2.0 Full-Speed Module, 14-bit A/D Converter, 12-bit D/A Converter, security and safety features

Features

■ Arm Cortex-M4 Core with Floating Point Unit (FPU)
- Armv7E-M architecture with DSP instruction set
- Maximum operating frequency: 48 MHz
- Support for 4-GB address space
- Arm Memory Protection Unit (Arm MPU) with 8 regions
- Debug and Trace: ITM, DWT, FPB, TPIU, ETB
- CoreSight™ Debug Port: JTAG-DP and SW-DP

■ Memory
- 1-MB code flash memory
- 8-KB data flash memory (100,000 program/erase (P/E) cycles)
- 192-KB SRAM
- Flash Cache (FCACHE)
- Memory Protection Unit (MPU)
- Memory Mirror Function (MMF)
- 128-bit unique ID

■ Connectivity
- USB 2.0 Full-Speed Module (USBFS)
  - On-chip transceiver with voltage regulator
  - Compliant with USB Battery Charging Specification 1.2
- Serial Communications Interface (SCI) × 6
  - UART
  - Simple IIC
  - Simple SPI
- Serial Peripheral Interface (SPI) × 2
- I^2C bus interface (IIC) × 3
- Controller Area Network (CAN) module
- Serial Sound Interface Enhanced (SSIE)
- SD/MMC Host Interface (SDHI)
- Quad Serial Peripheral Interface (QSPI)
- External address space
  - 8- or 16-bit bus space is selectable per area

■ Analog
- 14-bit A/D Converter (ADC14)
- 12-bit D/A Converter (DAC12)
- 8-bit D/A Converter (DAC8) × 2 (for ACMPLP)
- Low-Power Analog Comparator (ACMPLP) × 2
- Operational Amplifier (OPAMP) × 4
- Temperature Sensor (TSN)

■ Timers
- General PWM Timer 32-Bit (GPT32) × 4
- General PWM Timer 16-Bit (GPT16) × 6
- Asynchronous General-Purpose Timer (AGT) × 2
- Watchdog Timer (WDT)

■ Safety
- Error Correction Code (ECC) in SRAM
- SRAM parity error check
- Flash area protection
- ADC self-diagnosis function
- Clock Frequency Accuracy Measurement Circuit (CAC)
- Cyclic Redundancy Check (CRC) calculator
- Data Operation Circuit (DOC)
- Port Output Enable for GPT (POEG)
- Independent Watchdog Timer (IWDT)
- GPIO readback level detection
- Register write protection
- Main oscillator stop detection
- Illegal memory access

■ System and Power Management
- Low power modes
- Realtime Clock (RTC) with calendar and Battery Backup support
- Event Link Controller (ELC)
- DMA Controller (DMAC) × 4
- Data Transfer Controller (DTC)
- Key Interrupt Function (KINT)
- Power-on reset
- Low Voltage Detection (LVD) with voltage settings

■ Security and Encryption
- AES128/256
- GHASH
- True Random Number Generator (TRNG)

■ Human Machine Interface (HMI)
- Segment LCD Controller (SLCDC)
  - Up to 54 segments × 4 commons
  - Up to 50 segments × 8 commons
- Capacitive Touch Sensing Unit (CTSU)

■ Multiple Clock Sources
- Main clock oscillator (MOSC)
  (1 to 20 MHz when VCC = 2.4 to 5.5 V)
  (1 to 8 MHz when VCC = 1.8 to 2.4 V)
  (1 to 4 MHz when VCC = 1.6 to 1.8 V)
- Sub-clock oscillator (SOSC) (32.768 kHz)
- High-speed on-chip oscillator (HOCO)
  (24, 32, 48, 64 MHz when VCC = 2.4 to 5.5 V)
  (24, 32, 48 MHz when VCC = 1.8 to 5.5 V)
  (24, 32 MHz when VCC = 1.6 to 5.5 V)
- Middle-speed on-chip oscillator (MOCO) (8 MHz)
- Low-speed on-chip oscillator (LOCO) (32.768 kHz)
- IWDT-dedicated on-chip oscillator (15 kHz)
- Clock trim function for HOCO/MOCO/LOCO
- Clock out support

■ General Purpose I/O Ports
- Up to 126 input/output pins
  - Up to 3 CMOS input
  - Up to 123 CMOS input/output
    - Up to 11 input/output 5-V tolerant
    - Up to 2 high current (20 mA)

■ Operating Voltage
- VCC: 1.6 to 5.5 V

■ Operating Temperature and Packages
- Ta = -40°C to +85°C
  - 145-pin LGA (7 mm × 7 mm, 0.5 mm pitch)
  - 121-pin BGA (8 mm × 8 mm, 0.65 mm pitch)
  - 100-pin LGA (7 mm × 7 mm, 0.65 mm pitch)
- Ta = -40°C to +105°C
  - 144-pin LQFP (20 mm × 20 mm, 0.5 mm pitch)
  - 100-pin LQFP (14 mm × 14 mm, 0.5 mm pitch)
  - 64-pin LQFP (10 mm × 10 mm, 0.5 mm pitch)
  - 64-pin QFN (8 mm × 8 mm, 0.4 mm pitch)

1. Overview

The MCU integrates multiple series of software- and pin-compatible Arm®-based 32-bit cores that share a common set of Renesas peripherals to facilitate design scalability and efficient platform-based product development.

The MCU in this series incorporates a low-power, high-performance Arm Cortex®-M4 core running up to 48 MHz, with the following features:

- 1-MB code flash memory
- 192-KB SRAM
- Segment LCD Controller (SLCDC)
- Capacitive Touch Sensing Unit (CTSU)
- USB 2.0 Full-Speed Module (USBFS)
- 14-bit A/D Converter (ADC14)
- 12-bit D/A Converter (DAC12)
- Security features.

1.1 Function Outline

Table 1.1 Arm core

Feature	Functional description
Arm Cortex-M4	• Maximum operating frequency: up to 48 MHz • Arm Cortex-M4 - Revision: r0p1-01rel0 - Armv7E-M architecture profile - Single precision floating-point unit compliant with the ANSI/IEEE Std 754-2008. • Arm Memory Protection Unit (Arm MPU) - Armv7 Protected Memory System Architecture - 8 protected regions. • SysTick timer - Driven by SYSTICCLK (LOCO) or ICLK.

Table 1.2 Memory

Feature	Functional description
Code flash memory	Maximum 1-MB code flash memory. See section 47, Flash Memory in User's Manual.
Data flash memory	8-KB data flash memory. See section 47, Flash Memory in User's Manual.
Option-setting memory	The option-setting memory determines the state of the MCU after a reset. See section 7, Option-Setting Memory in User's Manual.
Memory Mirror Function (MMF)	The Memory Mirror Function (MMF) can be configured to mirror the target application image load address in code flash memory to the application image link address in the 23-bit unused memory space (memory mirror space addresses). Your application code is developed and linked to run from this MMF destination address. The application code does not need to know the load location where it is stored in code flash memory. See section 5, Memory Mirror Function (MMF) in User's Manual.
SRAM	On-chip high-speed SRAM with either parity bit or Error Correction Code (ECC). The first 16-KB in SRAM0 provides error correction capability using ECC. See section 46, SRAM in User's Manual.

Table 1.3 System (1 of 2)

Feature	Functional description
Operating modes	Two operating modes: • Single-chip mode • SCI/USB boot mode. See section 3, Operating Modes in User's Manual.
Resets	14 resets: • RES pin reset • Power-on reset • VBATT-selected voltage power-on reset • Independent watchdog timer reset • Watchdog timer reset • Voltage monitor 0 reset • Voltage monitor 1 reset • Voltage monitor 2 reset • SRAM parity error reset • SRAM ECC error reset • Bus master MPU error reset • Bus slave MPU error reset • CPU stack pointer error reset • Software reset. See section 6, Resets in User's Manual.
Low Voltage Detection (LVD)	Low Voltage Detection (LVD) function monitors the voltage level input to the VCC pin, and the detection level can be selected using a software program. See section 8, Low Voltage Detection (LVD) in User's Manual.
Clocks	• Main clock oscillator (MOSC) • Sub-clock oscillator (SOSC) • High-speed on-chip oscillator (HOCO) • Middle-speed on-chip oscillator (MOCO) • Low-speed on-chip oscillator (LOCO) • PLL frequency synthesizer • IWDT-dedicated on-chip oscillator • Clock out support. See section 9, Clock Generation Circuit in User's Manual.
Clock Frequency Accuracy Measurement Circuit (CAC)	The Clock Frequency Accuracy Measurement Circuit (CAC) counts pulses of the clock to be measured (measurement target clock) within the time generated by the clock to be used as a measurement reference (measurement reference clock), and determines the accuracy depending on whether the number of pulses is within the allowable range. When measurement is complete or the number of pulses within the time generated by the measurement reference clock is not within the allowable range, an interrupt request is generated. See section 10, Clock Frequency Accuracy Measurement Circuit (CAC) in User's Manual.
Interrupt Controller Unit (ICU)	The Interrupt Controller Unit (ICU) controls which event signals are linked to the NVIC/DTC module and DMAC module. The ICU also controls NMI interrupts. See section 14, Interrupt Controller Unit (ICU) in User's Manual.
Key Interrupt Function (KINT)	A key interrupt can be generated by setting the Key Return Mode Register (KRM) and inputting a rising or falling edge to the key interrupt input pins. See section 21, Key Interrupt Function (KINT) in User's Manual.
Low power modes	Power consumption can be reduced in multiple ways, such as by setting clock dividers, controlling EBCLK output, stopping modules, selecting power control mode in normal operation, and transitioning to low power modes. See section 11, Low Power Modes in User's Manual.
Battery backup function	A battery backup function is provided for partial powering by a battery. The battery powered area includes the RTC, SOSC, LOCO, wakeup control, backup memory, VBATT_R low voltage detection, and switches between VCC and VBATT. During normal operation, the battery powered area is powered by the main power supply, which is the VCC pin. When a VCC voltage drop is detected, the power source is switched to the dedicated battery backup power pin, the VBATT pin. When the voltage rises again, the power source is switched from the VBATT pin to the VCC pin. See section 12, Battery Backup Function in User's Manual.
Register write protection	The register write protection function protects important registers from being overwritten because of software errors. See section 13, Register Write Protection in User's Manual.

Table 1.3 System (2 of 2)

Feature	Functional description
Memory Protection Unit (MPU)	Four Memory Protection Units (MPUs) and a CPU stack pointer monitor function are provided for memory protection. See section 16, Memory Protection Unit (MPU) in User's Manual.
Watchdog Timer (WDT)	The Watchdog Timer (WDT) is a 14-bit down-counter. It can be used to reset the MCU when the counter underflows because the system has run out of control and is unable to refresh the WDT. In addition, a non-maskable interrupt or interrupt can be generated by an underflow. A refresh-permitted period can be set to refresh the counter and used as the condition to detect when the system runs out of control. See section 26, Watchdog Timer (WDT) in User's Manual.
Independent Watchdog Timer (IWDT)	The Independent Watchdog Timer (IWDT) consists of a 14-bit down-counter that must be serviced periodically to prevent counter underflow. It can be used to reset the MCU or to generate a non-maskable interrupt/interrupt for a timer underflow. Because the timer operates with an independent, dedicated clock source, it is particularly useful in returning the MCU to a known state as a fail-safe mechanism when the system runs out of control. The IWDT can be triggered automatically on a reset, underflow, refresh error, or by a refresh of the count value in the registers. See section 27, Independent Watchdog Timer (IWDT) in User's Manual.

Table 1.4 Event link

Feature	Functional description
Event Link Controller (ELC)	The Event Link Controller (ELC) uses the interrupt requests generated by various peripheral modules as event signals to connect them to different modules, enabling direct interaction between the modules without CPU intervention. See section 19, Event Link Controller (ELC) in User's Manual.

Table 1.5 Direct memory access

Feature	Functional description
Data Transfer Controller (DTC)	A Data Transfer Controller (DTC) module is provided for transferring data when activated by an interrupt request. See section 18, Data Transfer Controller (DTC) in User's Manual.
DMA Controller (DMAC)	A 4-channel DMA Controller (DMAC) module is provided for transferring data without the CPU. When a DMA transfer request is generated, the DMAC transfers data stored at the transfer source address to the transfer destination address. See section 17, DMA Controller (DMAC) in User's Manual.

Table 1.6 External bus interface

Feature	Functional description
External bus	• CS area: Connected to the external devices (external memory interface) • QSPI area: Connected to the QSPI (external device interface).

Table 1.7 Timers

Feature	Functional description
General PWM Timer (GPT)	The General PWM Timer (GPT) is a 32-bit timer with 4 channels and a 16-bit timer with 6 channels. PWM waveforms can be generated by controlling the up-counter, down-counter, or the up- and down-counter. In addition, PWM waveforms can be generated for controlling brushless DC motors. The GPT can also be used as a general-purpose timer. See section 23, General PWM Timer (GPT) in User's Manual.
Port Output Enable for GPT (POEG)	Use the Port Output Enable for GPT (POEG) function to place the General PWM Timer (GPT) output pins in the output disable state. See section 22, Port Output Enable for GPT (POEG) in User's Manual.
Asynchronous General Purpose Timer (AGT)	The Asynchronous General Purpose Timer (AGT) is a 16-bit timer that can be used for pulse output, external pulse width or period measurement, and counting external events. This 16-bit timer consists of a reload register and a down-counter. The reload register and the down-counter are allocated to the same address, and they can be accessed with the AGT register. See section 24, Asynchronous General Purpose Timer (AGT) in User's Manual.
Realtime Clock (RTC)	The Realtime Clock (RTC) has two counting modes, calendar count mode and binary count mode, that are controlled by the register settings. For calendar count mode, the RTC has a 100-year calendar from 2000 to 2099 and automatically adjusts dates for leap years. For binary count mode, the RTC counts seconds and retains the information as a serial value. Binary count mode can be used for calendars other than the Gregorian (Western) calendar. See section 25, Realtime Clock (RTC) in User's Manual.

Table 1.8 Communication interfaces (1 of 2)

Feature	Functional description
Serial Communications Interface (SCI)	The Serial Communications Interface (SCI) is configurable to five asynchronous and synchronous serial interfaces: • Asynchronous interfaces (UART and asynchronous communications interface adapter (ACIA)) • 8-bit clock synchronous interface • Simple IIC (master-only) • Simple SPI • Smart card interface. The smart card interface complies with the ISO/IEC 7816-3 standard for electronic signals and transmission protocol. SCI0 and SCI1 have FIFO buffers to enable continuous and full-duplex communication, and the data transfer speed can be configured independently using an on-chip baud rate generator. See section 29, Serial Communications Interface (SCI) in User's Manual.
I^2C Bus Interface (IIC)	The 3-channel I^2C Bus Interface (IIC) module conforms with and provides a subset of the NXP I^2C bus (Inter-Integrated Circuit bus) interface functions. See section 30, I2C Bus Interface (IIC) in User's Manual.
Serial Peripheral Interface (SPI)	Two independent Serial Peripheral Interface (SPI) channels are capable of high-speed, full-duplex synchronous serial communications with multiple processors and peripheral devices. See section 32, Serial Peripheral Interface (SPI) in User's Manual.
Serial Sound Interface Enhanced (SSIE)	The Serial Sound Interface Enhanced (SSIE) peripheral provides functionality to interface with digital audio devices for transmitting PCM audio data over a serial bus with the MCU. The SSIE supports an audio clock frequency of up to 25 MHz, and can be operated as a slave or master receiver, transmitter, or transceiver to suit various applications. The SSIE includes 8-stage FIFO buffers in the receiver and transmitter, and supports interrupts and DMA-driven data reception and transmission. See section 35, Serial Sound Interface Enhanced (SSIE) in User's Manual.
Quad Serial Peripheral Interface (QSPI)	The Quad Serial Peripheral Interface (QSPI) is a memory controller for connecting a serial ROM (nonvolatile memory such as a serial flash memory, serial EEPROM, or serial FeRAM) that has an SPI-compatible interface. See section 33, Quad Serial Peripheral Interface (QSPI) in User's Manual.

Table 1.8 Communication interfaces (2 of 2)

Feature	Functional description
Controller Area Network (CAN) Module	The Controller Area Network (CAN) module provides functionality to receive and transmit data using a message-based protocol between multiple slaves and masters in electromagnetically noisy applications. The CAN module complies with the ISO 11898-1 (CAN 2.0A/CAN 2.0B) standard and supports up to 32 mailboxes, which can be configured for transmission or reception in normal mailbox and FIFO modes. Both standard (11-bit) and extended (29-bit) messaging formats are supported. See section 31, Controller Area Network (CAN) Module in User's Manual.
USB 2.0 Full-Speed Module (USBFS)	The USB 2.0 Full-Speed Module (USBFS) can operate as a host controller or device controller. The module supports full-speed and low-speed (only for the host controller) transfer as defined in the Universal Serial Bus specification 2.0. The module has an internal USB transceiver and supports all of the transfer types defined in the Universal Serial Bus specification 2.0. The USB has buffer memory for data transfer, providing a maximum of 10 pipes. Pipes 1 to 9 can be assigned any endpoint number based on the peripheral devices used for communication or based on the user system. The MCU supports revision 1.2 of the Battery Charging specification. Because the MCU can be powered at 5 V, the USB LDO regulator provides the internal USB transceiver power supply at 3.3 V. See section 28, USB 2.0 Full-Speed Module (USBFS) in User's Manual.
SD/MMC Host Interface (SDHI)	The SD/MMC Host Interface (SDHI) provides the functionality needed to connect a variety of external memory cards to the MCU. The SDHI supports both 1-bit and 4-bit buses for connecting different memory cards that support SD, SDHC, and SDXC formats. When developing host devices that are compliant with the SD specifications, you must comply with the SD Host/Ancillary Product License Agreement (SD HALA). The MMC interface supports 1-bit, 4-bit, and 8-bit MMC buses that provide eMMC 4.51 (JEDEC Standard JESD 84-B451) device access. This interface also provides backward compatibility and support for high-speed SDR transfer modes. See section 36, SD/MMC Host Interface (SDHI) in User's Manual.

Table 1.9 Analog

Feature	Functional description
14-bit A/D Converter (ADC14)	A 14-bit successive approximation A/D converter is provided. Up to 28 analog input channels are selectable. Temperature sensor output and internal reference voltage are selectable for conversion. The A/D conversion accuracy is selectable from 12-bit and 14-bit conversion making it possible to optimize the tradeoff between speed and resolution in generating a digital value. See section 38, 14-Bit A/D Converter (ADC14) in User's Manual.
12-bit D/A Converter (DAC12)	The 12-bit D/A Converter (DAC12) converts data and includes an output amplifier. See section 39, 12-Bit D/A Converter (DAC12) in User's Manual.
8-bit D/A Converter (DAC8) (for ACMPLP)	The 8-bit D/A Converter (DAC8) converts data and does not include an output amplifier (DAC8). The DAC8 is used only as the reference voltage for ACMPLP. See section 43, 8-Bit D/A Converter (DAC8) in User's Manual.
Temperature Sensor (TSN)	The on-chip Temperature Sensor (TSN) determines and monitors the die temperature for reliable operation of the device. The sensor outputs a voltage directly proportional to the die temperature, and the relationship between the die temperature and the output voltage is linear. The output voltage is provided to the ADC14 for conversion and can be further used by the end application. See section 40, Temperature Sensor (TSN) in User's Manual.
Low-Power Analog Comparator (ACMPLP)	The Low-Power Analog Comparator (ACMPLP) compares the reference input voltage and analog input voltage. The comparison result can be read through software and also be output externally. The reference input voltage can be selected from an input to the CMPREFi (i = 0, 1) pin, an internal 8-bit D/A converter output, or the internal reference voltage (Vref) generated internally in the MCU. The ACMPLP response speed can be set before starting an operation. Setting the high-speed mode decreases the response delay time, but increases current consumption. Setting the low-speed mode increases the response delay time, but decreases current consumption. See section 42, Low Power Analog Comparator (ACMPLP) in User's Manual.
Operational Amplifier (OPAMP)	The Operational Amplifier (OPAMP) amplifies small analog input voltages and outputs the amplified voltages. A total of four differential operational amplifier units with two input pins and one output pin are provided. See section 41, Operational Amplifier (OPAMP) in User's Manual.

Table 1.10 Human machine interfaces

Feature	Functional description
Segment LCD Controller (SLCDC)	The Segment LCD Controller (SLCDC) provides the following functions: • Waveform A or B selectable • The LCD driver voltage generator can switch between an internal voltage boosting method, a capacitor split method, and an external resistance division method • Automatic output of segment and common signals based on automatic display data register read • The reference voltage generated when operating the voltage boost circuit can be selected in 16 steps (contrast adjustment) • The LCD can be made to blink. See section 48, Segment LCD Controller (SLCDC) in User's Manual.
Capacitive Touch Sensing Unit (CTSU)	The Capacitive Touch Sensing Unit (CTSU) measures the electrostatic capacitance of the touch sensor. Changes in the electrostatic capacitance are determined by software, which enables the CTSU to detect whether a finger is in contact with the touch sensor. The electrode surface of the touch sensor is usually enclosed within an electrical insulator so that fingers do not come into direct contact with the electrode. See section 44, Capacitive Touch Sensing Unit (CTSU) in User's Manual.

Table 1.11 Data processing

Feature	Functional description
Cyclic Redundancy Check (CRC) calculator	The Cyclic Redundancy Check (CRC) calculator generates CRC codes to detect errors in the data. The bit order of CRC calculation results can be switched for LSB-first or MSB-first communication. Additionally, various CRC-generating polynomials are available. The snoop function allows monitoring reads from and writes to specific addresses. This function is useful in applications that require CRC code to be generated automatically in certain events, such as monitoring writes to the serial transmit buffer and reads from the serial receive buffer. See section 34, Cyclic Redundancy Check (CRC) Calculator in User's Manual.
Data Operation Circuit (DOC)	The Data Operation Circuit (DOC) compares, adds, and subtracts 16-bit data. See section 45, Data Operation Circuit (DOC) in User's Manual.

Table 1.12 Security

Feature	Functional description
Secure Crypto Engine 5 (SCE5)	• Security algorithm - Symmetric algorithm: AES. • Other support features - TRNG (True Random Number Generator) - Hash-value generation: GHASH.

1.2 Block Diagram

Figure 1.1 shows a block diagram of the MCU superset. Some individual devices within the group have a subset of the features.

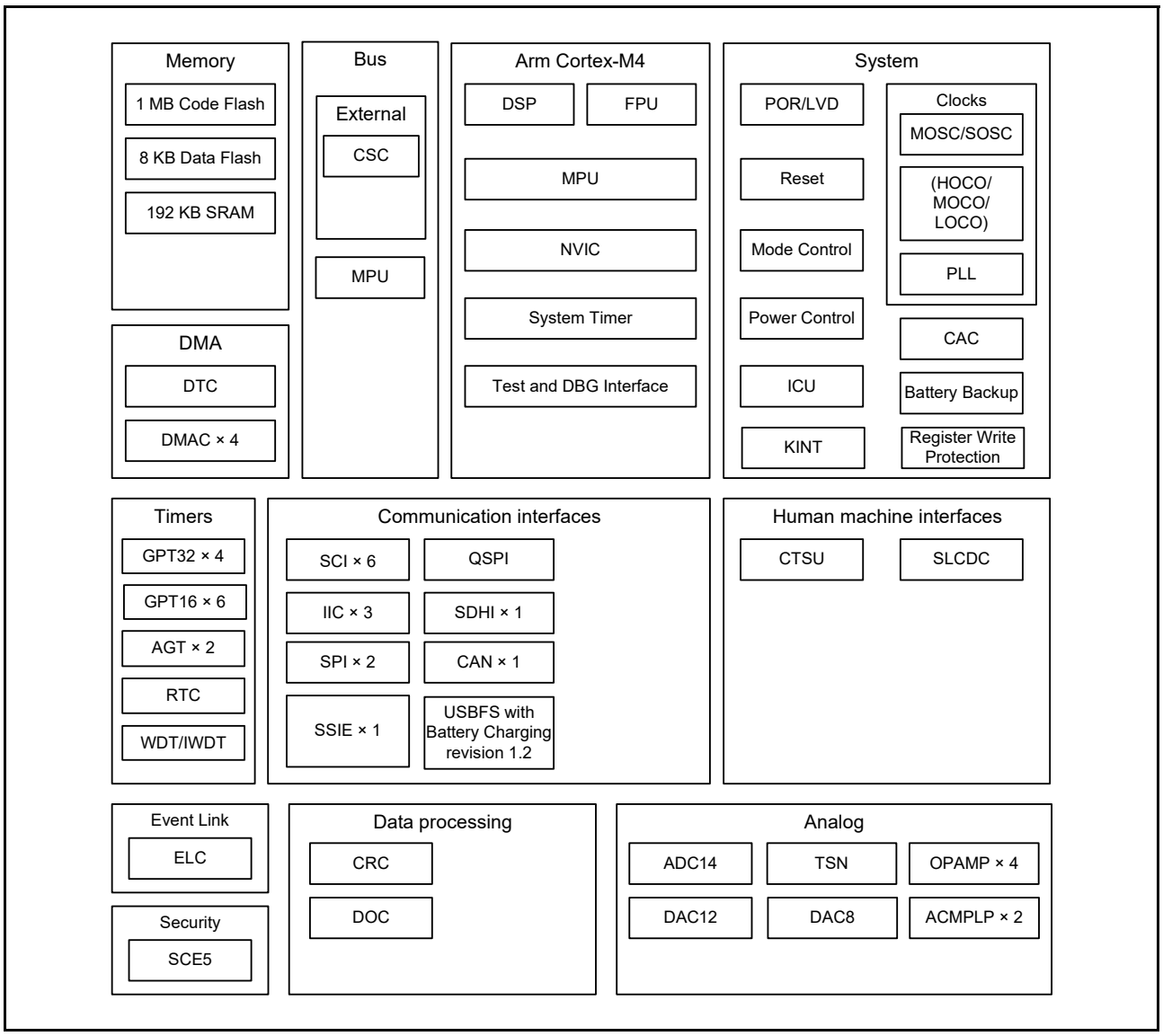

Figure 1.1 Block diagram

1.3 Part Numbering

Figure 1.2 shows the product part number information, including memory capacity, and package type. Table 1.14 shows a product list.

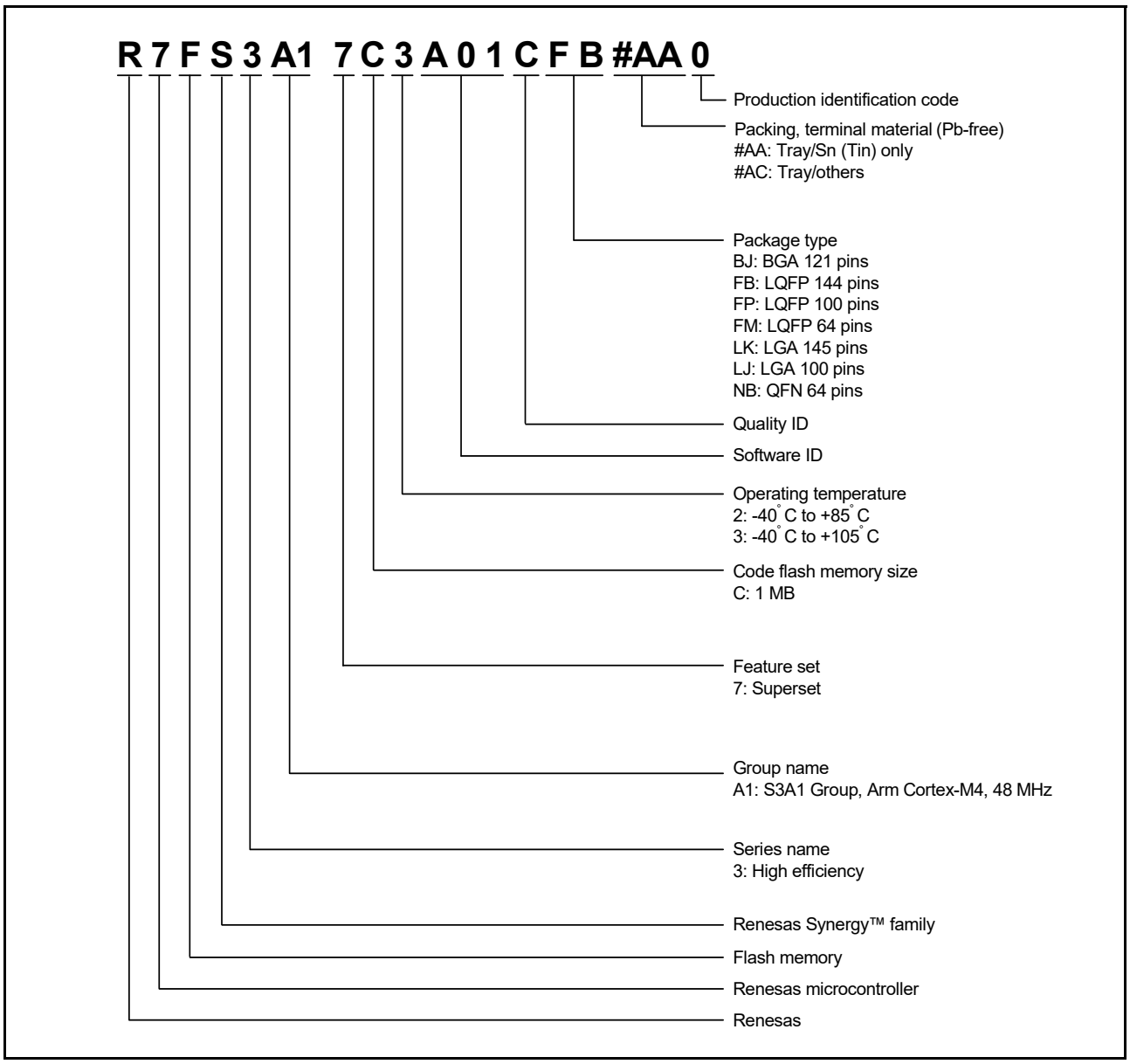

Figure 1.2 Part numbering scheme

Table 1.13 Product list

Product part number	Ordering part number	Package code	Code flash	Data flash	SRAM	Operating temperature
R7FS3A17C2A01CLK	R7FS3A17C2A01CLK#AC0	PTLG0145KA-A	1 MB	8 KB	192 KB	-40 to +85°C
R7FS3A17C3A01CFB	R7FS3A17C3A01CFB#AA0	PLQP0144KA-B				-40 to +105°C
R7FS3A17C2A01CBJ	R7FS3A17C2A01CBJ#AC0	PLBG0121JA-A				-40 to +85°C
R7FS3A17C3A01CFP	R7FS3A17C3A01CFP#AA0	PLQP0100KB-B				-40 to +105°C
R7FS3A17C2A01CLJ	R7FS3A17C2A01CLJ#AC0	PTLG0100JA-A				-40 to +85°C
R7FS3A17C3A01CFM	R7FS3A17C3A01CFM#AA0	PLQP0064KB-C				-40 to +105°C
R7FS3A17C3A01CNB	R7FS3A17C3A01CNB#AC0	PWQN0064LA-A				-40 to +105°C

1.4 Function Comparison

Table 1.14 Function comparison

Part numbers		R7FS3A17C2A01CLK	R7FS3A17C3A01CFB	R7FS3A17C2A01CBJ	R7FS3A17C3A01CFP	R7FS3A17C2A01CLJ	R7FS3A17C3A01CFM/ R7FS3A17C3A01CNB
Pin count		145	144	121	100	100	64
Package		LGA	LQFP	BGA	LQFP	LGA	LQFP/QFN
Code flash memory		1 MB					
Data flash memory		8 KB					
SRAM		192 KB					
	Parity	176 KB					
	ECC	16 KB					
System	CPU clock	48 MHz					
	Backup registers	512 bytes					
	ICU	Yes					
	KINT	8					
Event control	ELC	Yes					
DMA	DTC	Yes					
	DMAC	4					
Bus	External bus	16-bit bus		8-bit bus			No
Timers	GPT32	4					
	GPT16	6					
	AGT	2					
	RTC	Yes					
	WDT/IWDT	Yes					
Communication	SCI	6					
	IIC	3			2		
	SPI	2					
	SSIE	1					No
	QSPI	1					No
	SDHI	1					No
	CAN	1					
	USBFS	Yes					
Analog	ADC14	28		26	25		18
	DAC12	1					
	DAC8	2					
	ACMPLP	2					
	OPAMP	4	4	4	4	4	3
	TSN	Yes					
HMI	SLCDC	4 com × 54 seg or 8 com x 50 seg		4 com × 46 seg or 8 com x 42 seg	4 com × 38 seg or 8 com x 34 seg		4 com × 21 seg or 8 com x 17 seg
	CTSU	27					24
Data processing	CRC	Yes					
	DOC	Yes					
Security		SCE5					

1.5 Pin Functions

Table 1.15 Pin functions (1 of 4)

Function	Signal	I/O	Description
Power supply	VCC	Input	Power supply pin. Connect this pin to the system power supply. Connect it to VSS through a 0.1-μF capacitor. The capacitor should be placed close to the pin.
	VCL	Input	Connect this pin to the VSS pin through the smoothing capacitor used to stabilize the internal power supply. Place the capacitor close to the pin.
	VSS	Input	Ground pin. Connect to the system power supply (0 V).
	VBATT	Input	Backup power supply pin
Clock	XTAL	Output	Pins for a crystal resonator. An external clock signal can be input through the EXTAL pin.
	EXTAL	Input	
	XCIN	Input	Input/output pins for the sub-clock oscillator. Connect a crystal resonator between XCOUT and XCIN.
	XCOUT	Output	
	EBCLK	Output	Outputs the external bus clock for external devices
	CLKOUT	Output	Clock output pin
Operating mode control	MD	Input	Pins for setting the operating mode. The signal levels on these pins must not be changed during operation mode transition on release from the reset state.
System control	RES	Input	Reset signal input pin. The MCU enters the reset state when this signal goes low.
CAC	CACREF	Input	Measurement reference clock input pin
Interrupt	NMI	Input	Non-maskable interrupt request pin
	IRQ0 to IRQ15	Input	Maskable interrupt request pins
KINT	KR00 to KR07	Input	Key interrupt input pins. A key interrupt (KINT) can be generated by inputting a falling edge to the key interrupt input pins.
On-chip debug	TMS	I/O	On-chip emulator or boundary scan pins
	TDI	Input	
	TCK	Input	
	TDO	Output	
	SWDIO	I/O	Serial wire debug data input/output pin
	SWCLK	Input	Serial wire clock pin
	SWO	Output	Serial wire trace output pin
External bus interface	RD	Output	Strobe signal indicating that reading from the external bus interface space is in progress, active-low
	WR	Output	Strobe signal indicating that writing to the external bus interface space is in progress, in 1-write strobe mode, active-low
	WR0, WR1	Output	Strobe signals indicating that either group of data bus pins (D07 to D00, D15 to D08) is valid in writing to the external bus interface space, in byte strobe mode, active-low
	BC0, BC1	Output	Strobe signals indicating that either group of data bus pins (D07 to D00, D15 to D08) is valid in access to the external bus interface space, in 1-write strobe mode, active-low
	ALE	Output	Address latch signal when address/data multiplexed bus is selected
	WAIT	Input	Input pin for wait request signals in access to the external space, active-low
	CS0 to CS3	Output	Select signals for CS areas, active-low
	A00 to A23	Output	Address bus
	D00 to D15	I/O	Data bus
Battery backup	VBATWIO0 to VBATWIO2	I/O	Output wakeup signal for the VBATT wakeup control function. External event input for the VBATT wakeup control function.

Table 1.15 Pin functions (2 of 4)

Function	Signal	I/O	Description
GPT	GTETRGA, GTETRGB	Input	External trigger input pin
	GTIOC0A to GTIOC9A, GTIOC0B to GTIOC9B	I/O	Input capture, output capture, or PWM output pin
	GTIU	Input	Hall sensor input pin U
	GTIV	Input	Hall sensor input pin V
	GTIW	Input	Hall sensor input pin W
	GTOUUP	Output	3-phase PWM output for BLDC motor control (positive U phase)
	GTOULO	Output	3-phase PWM output for BLDC motor control (negative U phase)
	GTOVUP	Output	3-phase PWM output for BLDC motor control (positive V phase)
	GTOVLO	Output	3-phase PWM output for BLDC motor control (negative V phase)
	GTOWUP	Output	3-phase PWM output for BLDC motor control (positive W phase)
	GTOWLO	Output	3-phase PWM output for BLDC motor control (negative W phase)
AGT	AGTEE0, AGTEE1	Input	External event input enable signals
	AGTIO0, AGTIO1	I/O	External event input and pulse output pins
	AGTO0, AGTO1	Output	Pulse output pins
	AGTOA0, AGTOA1	Output	Output compare match A output pins
	AGTOB0, AGTOB1	Output	Output compare match B output pins
RTC	RTCOUT	Output	Output pin for 1-Hz/64-Hz clock
	RTCIC0 to RTCIC2	Input	Time capture event input pins
SCI	SCK0 to SCK4, SCK9	I/O	Clock (clock synchronous mode) input/output pins
	RXD0 to RXD4, RXD9	Input	Received data (asynchronous mode/clock synchronous mode) input pins
	TXD0 to TXD4, TXD9	Output	Transmitted data (asynchronous mode/clock synchronous mode) output pins
	CTS0_RTS0 to CTS4_RTS4, CTS9_RTS9	I/O	Input/output pins for controlling the start of transmission and reception (asynchronous mode/clock synchronous mode), active-low
	SCL0 to SCL4, SCL9	I/O	I^2C clock (simple IIC) input/output pins
	SDA0 to SDA4, SDA9	I/O	I^2C data (simple IIC) input/output pins
	SCK0 to SCK4, SCK9	I/O	Clock (simple SPI) input/output pins
	MISO0 to MISO4, MISO9	I/O	Slave transmission of data (simple SPI) input/output pins
	MOSI0 to MOSI4, MOSI9	I/O	Master transmission of data (simple SPI) input/output pins
	SS0 to SS4, SS9	Input	Slave-select input pins (simple SPI), active-low
IIC	SCL0 to SCL2	I/O	Clock input/output pins
	SDA0 to SDA2	I/O	Data input/output pins
SSIE	SSIBCK0	I/O	SSIE serial bit clock pin
	SSILRCK0/SSIFS0	I/O	Word select pins
	SSITXD0	Output	Serial data output pin
	SSIRXD0	Input	Serial data input pin
	AUDIO_CLK	Input	External clock pin for audio (input oversampling clock)

Table 1.15 Pin functions (3 of 4)

Function	Signal	I/O	Description
SPI	RSPCKA, RSPCKB	I/O	Clock input/output pin
	MOSIA, MOSIB	I/O	Input/output pins for data output from the master
	MISOA, MISOB	I/O	Input/output pins for data output from the slave
	SSLA0, SSLB0	I/O	Input/output pins for slave selection
	SSLA1, SSLA2, SSLA3, SSLB1, SSLB2, SSLB3	Output	Output pins for slave selection
QSPI	QSPCLK	Output	QSPI clock output pin
	QSSL	Output	QSPI slave output pin
	QIO0	I/O	Master transmit data/Data 0
	QIO1	I/O	Master input data/Data 1
	QIO2, QIO3	I/O	Data 2, Data 3
CAN	CRX0	Input	Receive data
	CTX0	Output	Transmit data
USBFS	VSS_USB	Input	Ground pin
	VCC_USB_LDO	Input	Power supply pin for USB LDO regulator
	VCC_USB	I/O	Input: Power supply pin for USB transceiver. Output: USB LDO regulator output pin. This pin should be connected to an external capacitor.
	USB_DP	I/O	D+ I/O pin of the USB on-chip transceiver. This pin should be connected to the D+ pin of the USB bus.
	USB_DM	I/O	D– I/O pin of the USB on-chip transceiver. This pin should be connected to the D– pin of the USB bus.
	USB_VBUS	Input	USB cable connection monitor pin. This pin should be connected to VBUS on the USB bus. The VBUS pin status (connected or disconnected) can be detected when the USB module is operating as a device controller.
	USB_EXICEN	Output	Low power control signal for external power supply (OTG) chip
	USB_VBUSEN	Output	VBUS (5 V) supply enable signal for external power supply chip
	USB_OVRCURA, USB_OVRCURB	Input	Connect the external overcurrent detection signals to these pins. Connect the VBUS comparator signals to these pins when the OTG power supply chip is connected.
	USB_ID	Input	Connect the MicroAB connector ID input signal to this pin during operation in OTG mode
SDHI	SD0CLK	Output	SD clock output pin
	SD0CMD	I/O	SD command output, response input signal pin
	SD0DAT0 to SD0DAT7	I/O	SD data bus pins
	SD0CD	Input	SD card detection pin
	SD0WP	Input	SD write-protect signal
Analog power supply	AVCC0	Input	Analog voltage supply pin
	AVSS0	Input	Analog voltage supply ground pin
	VREFH0	Input	Analog reference voltage supply pin
	VREFL0	Input	Reference power supply ground pin
	VREFH	Input	Analog reference voltage supply pin for D/A converter
	VREFL	Input	Analog reference ground pin for D/A converter
ADC14	AN000 to AN027	Input	Input pins for the analog signals to be processed by the A/D converter
	ADTRG0	Input	Input pins for the external trigger signals that start the A/D conversion, active-low
DAC12	DA0	Output	Output pins for the analog signals to be processed by the D/A converter
Comparator output	VCOUT	Output	Comparator output pin
ACMPLP	CMPREF0, CMPREF1	Input	Reference voltage input pins
	CMPIN0, CMPIN1	Input	Analog voltage input pins

Table 1.15 Pin functions (4 of 4)

Function	Signal	I/O	Description
OPAMP	AMP0+ to AMP3+	Input	Analog voltage input pins
	AMP0- to AMP3-	Input	Analog voltage input pins
	AMP0O to AMP3O	Output	Analog voltage output pins
CTSU	TS00 to TS13, TS17 to TS22, TS27 to TS31, TS34, TS35	Input	Capacitive touch detection pins (touch pins)
	TSCAP	-	Secondary power supply pin for the touch driver
I/O ports	P000 to P015	I/O	General-purpose input/output pins
	P100 to P115	I/O	General-purpose input/output pins
	P200	Input	General-purpose input pin
	P201 to P206, P212, P213	I/O	General-purpose input/output pins
	P214, P215	Input	General-purpose input pins
	P300 to P315	I/O	General-purpose input/output pins
	P400 to P415	I/O	General-purpose input/output pins
	P500 to P507, P511, P512	I/O	General-purpose input/output pins
	P600 to P606, P608 to P614	I/O	General-purpose input/output pins
	P700 to P705, P708 to P713	I/O	General-purpose input/output pins
	P800 to P809	I/O	General-purpose input/output pins
	P900 to P902, P914, P915	I/O	General-purpose input/output pins
SLCDC	VL1, VL2, VL3, VL4	I/O	Voltage pin for driving the LCD
	CAPH, CAPL	I/O	Capacitor connection pin for the LCD controller/driver
	COM0 to COM7	Output	Common signal output pins for the LCD controller/driver
	SEG00 to SEG53	Output	Segment signal output pins for the LCD controller/driver

1.6 Pin Assignments

Figure 1.3 to Figure 1.9 show the pin assignments.

R7FS3A17C2A01CLK

	A	B	C	D	E	F	G	H	J	K	L	M	N	
13	P407	P409	P412	P708	P711	VCC	P212 /EXTAL	P215 /XCIN	VCL	P702	P405	P402	P400	13
12	P915/ USB_DM	P914/ USB_DP	P410	P414	P710	VSS	P213 /XTAL	P214 /XCOUT	VBATT	P701	P404	P511	VCC	12
11	VCC_ USB	VSS_ USB	VCC_ USB_LDO	P411	P415	P712	P705	P704	P703	P403	P401	P512	VSS	11
10	P205	P206	P204	P408	P413	P709	P713	P700	P406	P003	P000	P002	P001	10
9	P203	P313	P202	P314						P004	P006	P009	P008	9
8	P900	P901	P200	P315						P005	AVSS0	P011 /VREFL0	P010 /VREFH0	8
7	VSS	P902	RES	P310						P007	AVCC0	P013 /VREFL	P012 /VREFH	7
6	VCC	P201/MD	P312	P305						P505	P506	P015	P014	6
5	P309	P311	P308	P303	NC					P503	P504	VSS	VCC	5
4	P307	P306	P304	P109/TDO /SWO	P114	P608	P604	P600	P105	P500	P502	P501	P507	4
3	P808	P809	P301	P112	P115	P610	P614	P603	P107	P106	P104	P803	P802	3
2	P302	P300/TCK /SWCLK	P111	P806	P609	P612	VSS	P605	P601	P805	P800	P101	P801	2
1	P108/TMS /SWDIO	P110/TDI	P113	P807	P611	P613	VCC	P606	P602	P804	P103	P102	P100	1
	A	B	C	D	E	F	G	H	J	K	L	M	N	

Figure 1.3 Pin assignment for 145-pin LGA (top view)

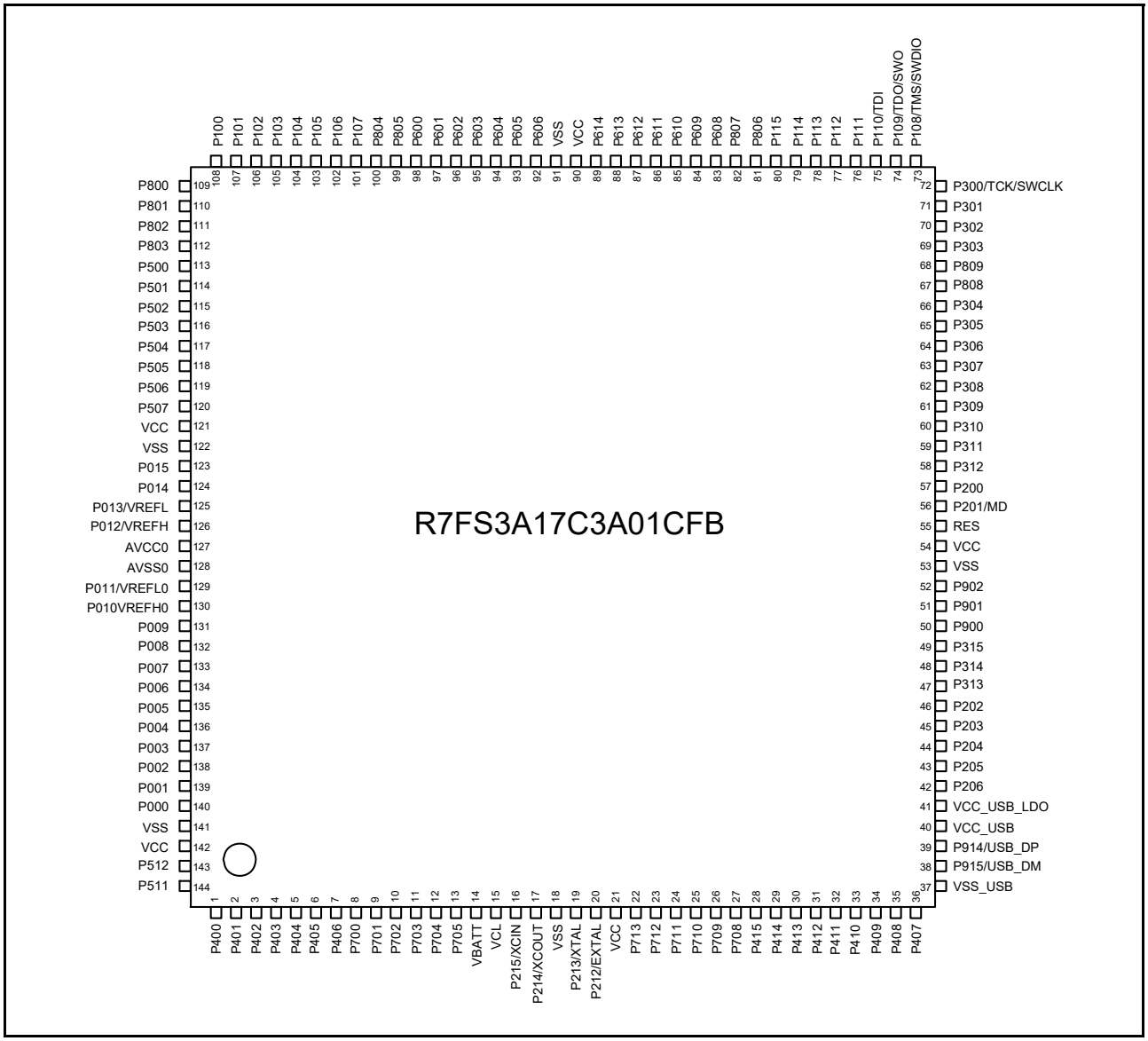

Figure 1.4 Pin assignment for 144-pin LQFP (top view)

R7FS3A17C2A01CBJ

	A	B	C	D	E	F	G	H	J	K	L	
11	P407	P408	P411	P414	P212/ EXTAL	P215/ XCIN	VCL	P406	P403	P401	P400	11
10	P915/ USB_DM	P914/ USB_DP	P410	P415	P213/ XTAL	P214/ XCOUT	VBATT	P405	P402	P511	P512	10
9	VCC_ USB	VSS_ USB	P409	P412	P708	VCC	VSS	P404	P002	P001	P000	9
8	P205	VCC_ USB_ LDO	P206	P204	P413	P710	P702	P006	P004	P003	P005	8
7	P203	P202	P313	P314	P315	P709	P701	P007	AVSS0	P011/ VREFL0	P010/ VREFH0	7
6	VSS	VCC	RES	P201/MD	P200	NC	P700	P008	AVCC0	P013/ VREFL	P012/ VREFH	6
5	P308	P309	P307	P302	P304	P612	P601	P506	P505	P015	P014	5
4	P305	P306	P808	P114	P611	P603	P600	P504	P503	VSS	VCC	4
3	P809	P303	P110/TDI	P111	P609	P604	P106	P104	P502	P500	P501	3
2	P301	P108/ TMS/ SWDIO	P113	P608	P613	P605	P602	P105	P102	P801	P800	2
1	P300/ TCK/ SWCLK	P109/ TDO/ SWO	P112	P115	P610	VCC	VSS	P107	P103	P101	P100	1
	A	B	C	D	E	F	G	H	J	K	L	

Figure 1.5 Pin assignment for 121-pin BGA (top view)

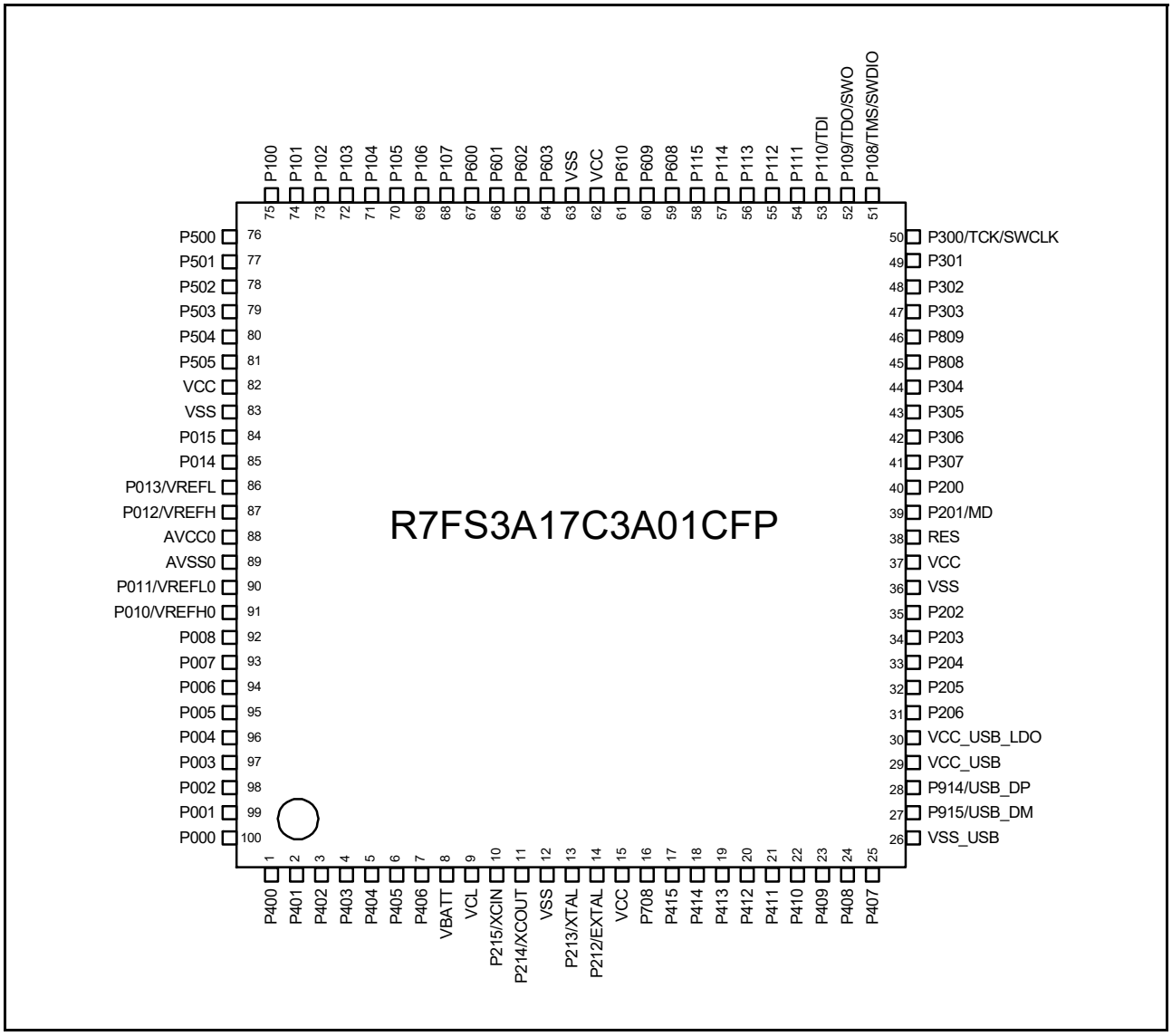

Figure 1.6 Pin assignment for 100-pin LQFP (top view)

R7FS3A17C2A01CLJ

	A	B	C	D	E	F	G	H	J	K	
10	P407	P409	P412	VCC	P212/ EXTAL	P215/ XCIN	VCL	P403	P400	P000	10
9	P915/ USB_DM	P914/ USB_DP	P413	VSS	P213/ XTAL	P214/ XCOUT	VBATT	P405	P401	P001	9
8	VCC_ USB	VSS_ USB	VCC_US B_LDO	P411	P415	P708	P404	P003	P004	P002	8
7	P205	P204	P206	P408	P414	P406	P006	P007	P008	P005	7
6	VSS	VCC	P202	P203	P410	P402	P505	AVSS0	P011/ VREFL0	P010/ VREFH0	6
5	P200	P201/MD	P307	RES	P113	P600	P504	AVCC0	P013/ VREFL	P012/ VREFH	5
4	P305	P304	P808	P306	P115	P601	P503	P100	P015	P014	4
3	P809	P303	P110/TDI	P111	P609	P602	P107	P103	VSS	VCC	3
2	P300/ TCK/ SWCLK	P302	P301	P114	P610	P603	P106	P101	P501	P502	2
1	P108/ TMS/ SWDIO	P109/ TDO/ SWO	P112	P608	VCC	VSS	P105	P104	P102	P500	1
	A	B	C	D	E	F	G	H	J	K	

Figure 1.7 Pin assignment for 100-pin LGA (top view)

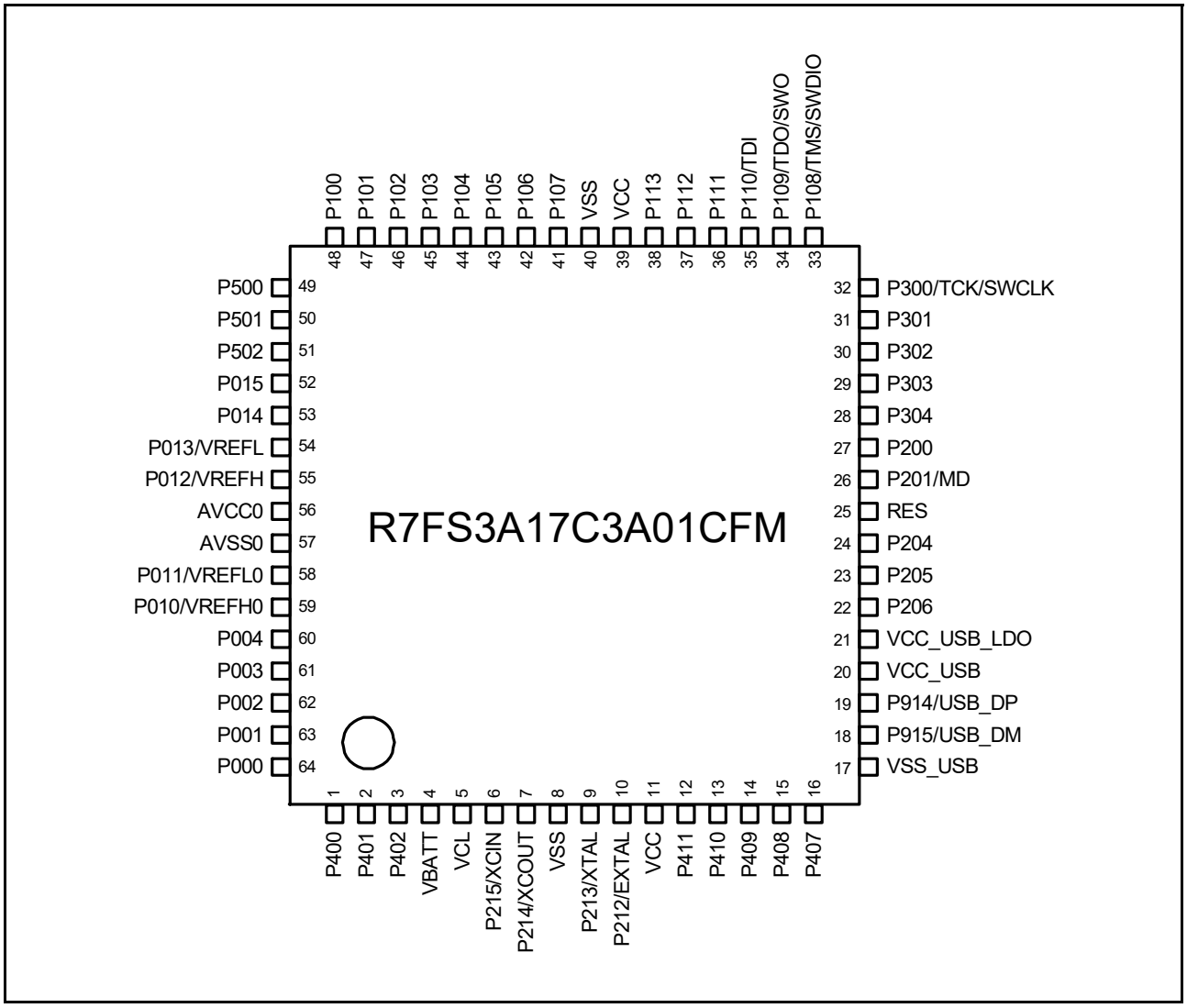

Figure 1.8 Pin assignment for 64-pin LQFP (top view)

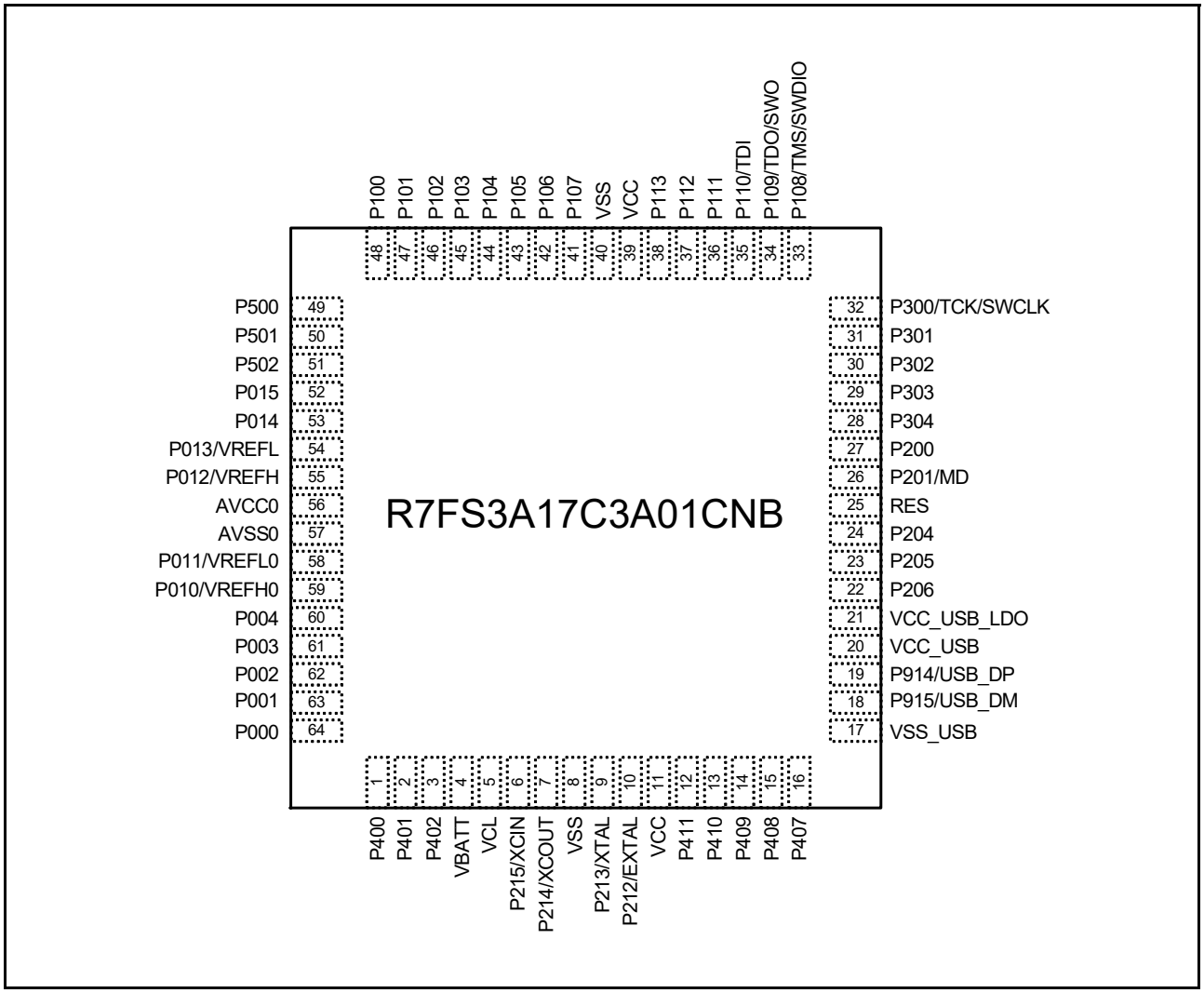

Figure 1.9 Pin assignment for 64-pin QFN (top view)

1.7 Pin Lists

Pin number											Timers				Communication interfaces						Analog			HMI	
LGA145	LQFP144	BGA121	LQFP100	LGA100	LQFP64	QFN64	Power, System, Clock, Debug, CAC, VBATT	Interrupt	I/O port	External bus	AGT	GPT_OPS, POEG	GPT	RTC	USBFS, CAN	SCI	IIC	SPI/QSPI	SSIE	SDHI	ADC14	DAC12, OPAMP	ACMPLP	SLCDC	CTSU
N13	1	L11	1	J10	1	1	CACREF	IRQ0	P400	-	AGTIO1	-	GTIOC6A	-	-	SCK1 SCK4	SCL0	-	AUDIO_CLK	-	-	-	-	SEG4	TS20
L11	2	K11	2	J9	2	2	-	IRQ5	P401	-	-	GTETRGA	GTIOC6B	-	CTX0	TXD1/ MOSI1 /SDA1 CTS4_ RTS4/ SS4	SDA0	-	-	-	-	-	-	SEG5	TS19
M13	3	J10	3	F6	3	3	VBATWIO0	IRQ4	P402	-	AGTIO0/ AGTIO1	-	-	RTCIC0	CRX0	RXD1/ MISO1 /SCL1	-	-	-	-	-	-	-	SEG6	TS18
K11	4	J11	4	H10	-	-	VBATWIO1	-	P403	-	AGTIO0/ AGTIO1	-	GTIOC3A	RTCIC1	-	CTS1_ RTS1/ SS1	-	-	SSIBCK0	-	-	-	-	-	TS17
L12	5	H9	5	G8	-	-	VBATWIO2	-	P404	-	-	-	GTIOC3B	RTCIC2	-	-	-	-	SSILRCK0 /SSIFS0	-	-	-	-	-	-
L13	6	H10	6	H9	-	-	-	-	P405	-	-	-	GTIOC1A	-	-	-	-	-	SSITXD0	-	-	-	-	-	-
J10	7	H11	7	F7	-	-	-	-	P406	-	-	-	GTIOC1B	-	-	-	-	SSLA3	SSIRXD0	-	-	-	-	-	-
H10	8	G6	-	-	-	-	-	-	P700	-	-	-	GTIOC5A	-	-	-	-	MISOA	-	-	-	-	-	-	-
K12	9	G7	-	-	-	-	-	-	P701	-	-	-	GTIOC5B	-	-	-	-	MOSIA	-	-	-	-	-	-	-
K13	10	G8	-	-	-	-	-	-	P702	-	-	-	GTIOC6A	-	-	-	-	RSPCKA	-	-	-	-	-	-	-
J11	11	-	-	-	-	-	-	-	P703	-	-	-	GTIOC6B	-	-	-	-	SSLA0	-	-	-	-	VCOUT	-	-
H11	12	-	-	-	-	-	-	-	P704	-	AGTO0	-	-	-	-	-	-	SSLA1	-	-	-	-	-	-	-
G11	13	-	-	-	-	-	-	-	P705	-	AGTIO0	-	-	-	-	-	-	SSLA2	-	-	-	-	-	-	-
J12	14	G10	8	G9	4	4	VBATT	-	-	-	-	-	-	-	-	-	-	-	-	-	-	-	-	-	-
J13	15	G11	9	G10	5	5	VCL	-	-	-	-	-	-	-	-	-	-	-	-	-	-	-	-	-	-
H13	16	F11	10	F10	6	6	XCIN	-	P215	-	-	-	-	-	-	-	-	-	-	-	-	-	-	-	-
H12	17	F10	11	F9	7	7	XCOUT	-	P214	-	-	-	-	-	-	-	-	-	-	-	-	-	-	-	-
F12	18	G9	12	D9	8	8	VSS	-	-	-	-	-	-	-	-	-	-	-	-	-	-	-	-	-	-
G12	19	E10	13	E9	9	9	XTAL	IRQ2	P213	-	-	GTETRGA	GTIOC0A	-	-	TXD1/ MOSI1 /SDA1	-	-	-	-	-	-	-	-	-
G13	20	E11	14	E10	10	10	EXTAL	IRQ3	P212	-	AGTEE1	GTETRGB	GTIOC0B	-	-	RXD1/ MISO1 /SCL1	-	-	-	-	-	-	-	-	-
F13	21	F9	15	D10	11	11	VCC	-	-	-	-	-	-	-	-	-	-	-	-	-	-	-	-	-	-
G10	22	-	-	-	-	-	-	-	P713	-	AGTOA0	-	GTIOC2A	-	-	-	-	-	-	-	-	-	-	-	-
F11	23	-	-	-	-	-	-	-	P712	-	AGTOB0	-	GTIOC2B	-	-	-	-	-	-	-	-	-	-	-	-
E13	24	-	-	-	-	-	-	-	P711	-	AGTEE0	-	-	-	-	CTS1_ RTS1/ SS1	-	-	-	-	-	-	-	-	-
E12	25	F8	-	-	-	-	-	-	P710	A17	-	-	-	-	-	SCK1	-	-	-	-	-	-	-	-	-
F10	26	F7	-	-	-	-	-	IRQ10	P709	-	-	-	-	-	-	TXD1/ MOSI1 /SDA1	-	-	-	-	-	-	-	-	-
D13	27	E9	16	F8	-	-	-	IRQ11	P708	-	-	-	-	-	-	RXD1/ MISO1 /SCL1	-	SSLA3	-	-	-	-	-	-	-
E11	28	D10	17	E8	-	-	-	IRQ8	P415	-	-	-	GTIOC0A	-	-	-	-	SSLA2	-	SD0CD	-	-	-	-	-
D12	29	D11	18	E7	-	-	-	IRQ9	P414	-	-	-	GTIOC0B	-	-	-	-	SSLA1	-	SD0WP	-	-	-	-	-
E10	30	E8	19	C9	-	-	-	-	P413	-	-	GTOUUP	-	-	-	CTS0_ RTS0/ SS0	-	SSLA0	-	SD0CLK	-	-	-	-	-
C13	31	D9	20	C10	-	-	-	-	P412	-	-	GTOULO	-	-	-	SCK0	-	RSPCKA	-	SD0CMD	-	-	-	-	-

Pin number											Timers				Communication interfaces						Analog			HMI	
LGA145	LQFP144	BGA121	LQFP100	LGA100	LQFP64	QFN64	Power, System, Clock, Debug, CAC, VBATT	Interrupt	I/O port	External bus	AGT	GPT_OPS, POEG	GPT	RTC	USBFS, CAN	SCI	IIC	SPI/QSPI	SSIE	SDHI	ADC14	DAC12, OPAMP	ACMPLP	SLCDC	CTSU
D11	32	C11	21	D8	12	12	-	IRQ4	P411	-	AGTOA1	GTOVUP	GTIOC9A	-	-	TXD0/ MOSI0 /SDA0 CTS3_ RTS3/ SS3	-	MOSIA	-	SD0DAT0	-	-	-	SEG7	TS7
C12	33	C10	22	E6	13	13	-	IRQ5	P410	-	AGTOB1	GTOVLO	GTIOC9B	-	-	SCK3 RXD0/ MISO0 /SCL0	-	MISOA	-	SD0DAT1	-	-	-	SEG8	TS6
B13	34	C9	23	B10	14	14	-	IRQ6	P409	-	-	GTOWUP	GTIOC5A	-	USB_ EXIC EN	TXD3/ MOSI3 /SDA3	-	-	-	-	-	-	-	SEG9	TS5
D10	35	B11	24	D7	15	15	-	IRQ7	P408	-	-	GTOWLO	GTIOC5B	-	USB_ ID	CTS1_ RTS1/ SS1 RXD3/ MISO3 /SCL3	SCL0	-	-	-	-	-	-	SEG10	TS4
A13	36	A11	25	A10	16	16	-	-	P407	-	AGTIO0	-	-	RTCOUT	USB_ VBUS	CTS4_ RTS4/ SS4	SDA0	SSLB3	-	-	ADTR G0	-	-	SEG11	TS3
B11	37	B9	26	B8	17	17	VSS_USB	-	-	-	-	-	-	-	-	-	-	-	-	-	-	-	-	-	-
A12	38	A10	27	A9	18	18	-	-	P915	-	-	-	-	-	USB_ DM	-	-	-	-	-	-	-	-	-	-
B12	39	B10	28	B9	19	19	-	-	P914	-	-	-	-	-	USB_ DP	-	-	-	-	-	-	-	-	-	-
A11	40	A9	29	A8	20	20	VCC_USB	-	-	-	-	-	-	-	-	-	-	-	-	-	-	-	-	-	-
C11	41	B8	30	C8	21	21	VCC_USB _LDO	-	-	-	-	-	-	-	-	-	-	-	-	-	-	-	-	-	-
B10	42	C8	31	C7	22	22	-	IRQ0	P206	WAI T	-	GTIU	-	-	USB_ VBUS EN	RXD4/ MISO4 /SCL4	SDA1	SSLB1	-	SD0DAT2	-	-	-	SEG12	TS1
A10	43	A8	32	A7	23	23	CLKOUT	IRQ1	P205	A16	AGTO1	GTIV	GTIOC4A	-	USB_ OVR CUR A	TXD4/ MOSI4 /SDA4 CTS9_ RTS9/ SS9	SCL1	SSLB0	-	SD0DAT3	-	-	-	SEG20	TSCAP
C10	44	D8	33	B7	24	24	CACREF	-	P204	A18	AGTIO1	GTIW	GTIOC4B	-	USB_ OVR CUR B	SCK4 SCK9	SCL0	RSPCKB	-	SD0DAT4	-	-	-	SEG23	TS0
A9	45	A7	34	D6	-	-	-	IRQ2	P203	A19	-	-	GTIOC5A	-	-	CTS2_ RTS2/ SS2 TXD9/ MOSI9 /SDA9	-	MOSIB	-	SD0DAT5	-	-	-	SEG22	TSCAP
C9	46	B7	35	C6	-	-	-	IRQ3	P202	WR1 /BC1	-	-	GTIOC5B	-	-	SCK2 RXD9/ MISO9 /SCL9	-	MISOB	-	SD0DAT6	-	-	-	SEG21	-
B9	47	C7	-	-	-	-	-	-	P313	A20	-	-	-	-	-	-	-	-	-	SD0DAT7	-	-	-	-	-
D9	48	D7	-	-	-	-	-	-	P314	A21	-	-	-	-	-	-	-	-	-	-	ADTR G0	-	-	-	-
D8	49	E7	-	-	-	-	-	-	P315	A22	-	-	-	-	-	RXD4/ MISO4 /SCL4	-	-	-	-	-	-	-	-	-
A8	50	-	-	-	-	-	-	-	P900	A23	-	-	-	-	-	TXD4/ MOSI4 /SDA4	-	-	-	-	-	-	-	-	-
B8	51	-	-	-	-	-	-	-	P901	-	AGTIO1	-	-	-	-	SCK4	-	-	-	-	-	-	-	-	-
B7	52	-	-	-	-	-	-	-	P902	-	AGTO1	-	-	-	-	CTS4_ RTS4/ SS4	-	-	-	-	-	-	-	-	-
A7	53	A6	36	A6	-	-	VSS	-	-	-	-	-	-	-	-	-	-	-	-	-	-	-	-	-	-
A6	54	B6	37	B6	-	-	VCC	-	-	-	-	-	-	-	-	-	-	-	-	-	-	-	-	-	-
C7	55	C6	38	D5	25	25	RES	-	-	-	-	-	-	-	-	-	-	-	-	-	-	-	-	-	-
B6	56	D6	39	B5	26	26	MD	-	P201	-	-	-	-	-	-	-	-	-	-	-	-	-	-	-	-

Pin number											Timers				Communication interfaces						Analog			HMI	
LGA145	LQFP144	BGA121	LQFP100	LGA100	LQFP64	QFN64	Power, System, Clock, Debug, CAC, VBATT	Interrupt	I/O port	External bus	AGT	GPT_OPS, POEG	GPT	RTC	USBFS, CAN	SCI	IIC	SPI/QSPI	SSIE	SDHI	ADC14	DAC12, OPAMP	ACMPLP	SLCDC	CTSU
C8	57	E6	40	A5	27	27	-	NMI	P200	-	-	-	-	-	-	-	-	-	-	-	-	-	-	-	-
C6	58	-	-	-	-	-	-	-	P312	CS3	AGTOA1	-	-	-	-	CTS3_ RTS3/ SS3	-	-	-	-	-	-	-	-	-
B5	59	-	-	-	-	-	-	-	P311	CS2	AGTOB1	-	-	-	-	SCK3	-	-	-	-	-	-	-	-	-
D7	60	-	-	-	-	-	-	-	P310	A15	AGTEE1	-	-	-	-	TXD3/ MOSI3 /SDA3	-	QIO3	-	-	-	-	-	-	-
A5	61	B5	-	-	-	-	-	-	P309	A14	-	-	-	-	-	RXD3/ MISO3 /SCL3	-	QIO2	-	-	-	-	-	-	-
C5	62	A5	-	-	-	-	-	-	P308	A13	-	-	-	-	-	-	-	QIO1	-	-	-	-	-	SEG13	-
A4	63	C5	41	C5	-	-	-	-	P307	A12	-	-	-	-	-	-	-	QIO0	-	-	-	-	-	SEG14	-
B4	64	B4	42	D4	-	-	-	-	P306	A11	-	-	-	-	-	-	-	QSSL	-	-	-	-	-	SEG15	-
D6	65	A4	43	A4	-	-	-	IRQ8	P305	A10	-	-	-	-	-	-	-	QSPCLK	-	SD0CD	-	-	-	SEG16	-
C4	66	E5	44	B4	28	28	-	IRQ9	P304	A09	-	-	GTIOC7A	-	-	-	-	-	-	SD0WP	-	-	-	SEG17	TS11
A3	67	C4	45	C4	-	-	-	-	P808	-	-	-	-	-	-	-	-	-	-	SD0CLK	-	-	-	SEG18	-
B3	68	A3	46	A3	-	-	-	-	P809	-	-	-	-	-	-	-	-	-	-	SD0CMD	-	-	-	SEG19	-
D5	69	B3	47	B3	29	29	-	-	P303	A08	-	-	GTIOC7B	-	-	-	-	-	-	SD0DAT0	-	-	-	SEG3/ COM7	TS2
A2	70	D5	48	B2	30	30	-	IRQ5	P302	A07	-	GTOUUP	GTIOC4A	-	-	TXD2/ MOSI2 /SDA2	-	SSLB3	-	-	-	-	-	SEG2/ COM6	TS8
C3	71	A2	49	C2	31	31	-	IRQ6	P301	A06	AGTIO0	GTOULO	GTIOC4B	-	-	RXD2/ MISO2 /SCL2 CTS9_ RTS9/ SS9	-	SSLB2	-	-	-	-	-	SEG1/ COM5	TS9
B2	72	A1	50	A2	32	32	TCK/ SWCLK	-	P300	-	-	GTOUUP	GTIOC0A	-	-	-	-	SSLB1	-	-	-	-	-	-	-
A1	73	B2	51	A1	33	33	TMS/ SWDIO	-	P108	-	-	GTOULO	GTIOC0B	-	-	CTS9_ RTS9/ SS9	-	SSLB0	-	-	-	-	-	-	-
D4	74	B1	52	B1	34	34	TDO/SWO/ CLKOUT	-	P109	-	-	GTOVUP	GTIOC1A	-	CTX0	SCK1 TXD9/ MOSI9 /SDA9	-	MOSIB	-	-	-	-	-	SEG52	TS10
B1	75	C3	53	C3	35	35	TDI	IRQ3	P110	-	-	GTOVLO	GTIOC1B	-	CRX0	CTS2_ RTS2/ SS2 RXD9/ MISO9 /SCL9	-	MISOB	-	-	-	-	VCOUT	SEG53	-
C2	76	D3	54	D3	36	36	-	IRQ4	P111	A05	-	-	GTIOC3A	-	-	SCK2 SCK9	-	RSPCKB	-	-	-	-	-	CAPH	TS12
D3	77	C1	55	C1	37	37	-	-	P112	A04	-	-	GTIOC3B	-	-	TXD2/ MOSI2 /SDA2 SCK1	-	SSLB0	SSIBCK0	-	-	-	-	CAPL	TSCAP
C1	78	C2	56	E5	38	38	-	-	P113	A03	-	-	GTIOC2A	-	-	RXD2/ MISO2 /SCL2	-	-	SSILRCK0 /SSIFS0	-	-	-	-	SEG0/ COM4	TS27
E4	79	D4	57	D2	-	-	-	-	P114	A02	-	-	GTIOC2B	-	-	-	-	-	SSIRXD0	-	-	-	-	SEG24	TS29
E3	80	D1	58	E4	-	-	-	-	P115	A01	-	-	GTIOC4A	-	-	-	-	-	SSITXD0	-	-	-	-	SEG25	TS35
D2	81	-	-	-	-	-	-	-	P806	-	-	-	-	-	-	-	-	-	-	-	-	-	-	SEG26	-
D1	82	-	-	-	-	-	-	-	P807	-	-	-	-	-	-	-	-	-	-	-	-	-	-	SEG27	-
F4	83	D2	59	D1	-	-	-	-	P608	A00/ BC0	-	-	GTIOC4B	-	-	-	-	-	-	SD0DAT1	-	-	-	SEG28	-
E2	84	E3	60	E3	-	-	-	-	P609	CS1	-	-	GTIOC5A	-	-	-	-	-	-	SD0DAT2	-	-	-	SEG29	-
F3	85	E1	61	E2	-	-	-	-	P610	CS0	-	-	GTIOC5B	-	-	-	-	-	-	SD0DAT3	-	-	-	SEG30	-

Pin number											Timers				Communication interfaces						Analog			HMI	
LGA145	LQFP144	BGA121	LQFP100	LGA100	LQFP64	QFN64	Power, System, Clock, Debug, CAC, VBATT	Interrupt	I/O port	External bus	AGT	GPT_OPS, POEG	GPT	RTC	USBFS, CAN	SCI	IIC	SPI/QSPI	SSIE	SDHI	ADC14	DAC12, OPAMP	ACMPLP	SLCDC	CTSU
E1	86	E4	-	-	-	-	-	-	P611		-	-	-	-	-	-	-	-	-	-	-	-	-	SEG31	-
F2	87	F5	-	-	-	-	-	-	P612	D08	-	-	-	-	-	-	-	-	-	-	-	-	-	SEG32	-
F1	88	E2	-	-	-	-	-	-	P613	D09	-	-	-	-	-	-	-	-	-	-	-	-	-	SEG33	-
G3	89		-	-	-	-	-	-	P614	D10	-	-	-	-	-	-	-	-	-	-	-	-	-	SEG34	-
G1	90	F1	62	E1	39	39	VCC	-	-	-	-	-	-	-	-	-	-	-	-	-	-	-	-	-	-
G2	91	G1	63	F1	40	40	VSS	-	-	-	-	-	-	-	-	-	-	-	-	-	-	-	-	-	-
H1	92	-	-	-	-	-	-	-	P606	-	-	-	-	RTCOUT	-	-	-	-	-	-	-	-	-	SEG35	-
H2	93	F2	-	-	-	-	-	-	P605	D11	-	-	GTIOC8A	-	-	-	-	-	-	-	-	-	-	SEG36	-
G4	94	F3	-	-	-	-	-	-	P604	D12	-	-	GTIOC8B	-	-	-	-	-	-	-	-	-	-	SEG37	-
H3	95	F4	64	F2	-	-	-	-	P603	D13	-	-	GTIOC7A	-	-	CTS9_ RTS9/ SS9	-	-	-	SD0DAT4	-	-	-	SEG38	-
J1	96	G2	65	F3	-	-	-	-	P602	EBC LK	-	-	GTIOC7B	-	-	TXD9/ MOSI9 /SDA9	-	-	-	SD0DAT5	-	-	-	SEG39	-
J2	97	G5	66	F4	-	-	-	-	P601	WR/ WR0	-	-	GTIOC6A	-	-	RXD9/ MISO9 /SCL9	-	-	-	SD0DAT6	-	-	-	SEG40	-
H4	98	G4	67	F5	-	-	-	-	P600	RD	-	-	GTIOC6B	-	-	SCK9	-	-	-	SD0DAT7	-	-	-	SEG41	-
K2	99	-	-	-	-	-	-	-	P805		-	-	GTIOC9A	-	-	-	-	-	-	-	-	-	-	SEG42	-
K1	100	-	-	-	-	-	-	-	P804		-	-	GTIOC9B	-	-	-	-	-	-	-	-	-	-	SEG43	-
J3	101	H1	68	G3	41	41	-	KR07	P107	D07	-	-	GTIOC8A	-	-	-	-	-	-	-	-	-	-	COM3	-
K3	102	G3	69	G2	42	42	-	KR06	P106	D06	-	-	GTIOC8B	-	-	-	-	SSLA3	-	-	-	-	-	COM2	-
J4	103	H2	70	G1	43	43	-	KR05/ IRQ0	P105	D05	-	GTETRGA	GTIOC1A	-	-	-	-	SSLA2	-	-	-	-	-	COM1	TS34
L3	104	H3	71	H1	44	44	-	KR04/ IRQ1	P104	D04	-	GTETRGB	GTIOC1B	-	-	RXD0/ MISO0 /SCL0	-	SSLA1	-	-	-	-	-	COM0	TS13
L1	105	J1	72	H3	45	45	-	KR03	P103	D03	-	GTOWUP	GTIOC2A	-	CTX0	CTS0_ RTS0/ SS0	-	SSLA0	-	-	AN019	-	CMPRE F1	VL4	-
M1	106	J2	73	J1	46	46	-	KR02	P102	D02	AGTO0	GTOWLO	GTIOC2B	-	CRX0	SCK0 TXD2/ MOSI2 /SDA2	-	RSPCKA	-	-	AN020/ ADTR G0	-	CMPIN1	VL3	-
M2	107	K1	74	H2	47	47	-	KR01/ IRQ1	P101	D01	AGTEE0	GTETRGB	GTIOC5A	-	-	TXD0/ MOSI0 /SDA0 CTS1_ RTS1/ SS1	SDA1	MOSIA	-	-	AN021	-	CMPRE F0	VL2	-
N1	108	L1	75	H4	48	48	-	KR00/ IRQ2	P100	D00	AGTIO0	GTETRGA	GTIOC5B	-	-	RXD0/ MISO0 /SCL0 SCK1	SCL1	MISOA	-	-	AN022	-	CMPIN0	VL1	-
L2	109	L2	-	-	-	-	-	-	P800	D14	-	-	-	-	-	-	-	-	-	-	-	-	-	SEG44	-
N2	110	K2	-	-	-	-	-	-	P801	D15	-	-	-	-	-	-	-	-	-	-	-	-	-	SEG45	-
N3	111	-	-	-	-	-	-	-	P802	-	-	-	-	-	-	-	-	-	-	-	-	-	-	SEG46	-
M3	112	-	-	-	-	-	-	-	P803	-	-	-	-	-	-	-	-	-	-	-	-	-	-	SEG47	-
K4	113	K3	76	K1	49	49	-	-	P500	-	AGTOA0	GTIU	GTIOC2A	-	USB_ VBUS EN	-	-	QSPCLK	-	-	AN016	-	CMPRE F1	SEG48	-
M4	114	L3	77	J2	50	50	-	IRQ11	P501	-	AGTOB0	GTIV	GTIOC2B	-	USB_ OVR CUR A	TXD3/ MOSI3 /SDA3	-	QSSL	-	-	AN017	-	CMPIN1	SEG49	-
L4	115	J3	78	K2	51	51	-	IRQ12	P502	-	-	GTIW	GTIOC3B	-	USB_ OVR CUR B	RXD3/ MISO3 /SCL3	-	QIO0	-	-	AN018	-	CMPRE F0	SEG50	-

Pin number											Timers				Communication interfaces						Analog			HMI	
LGA145	LQFP144	BGA121	LQFP100	LGA100	LQFP64	QFN64	Power, System, Clock, Debug, CAC, VBATT	Interrupt	I/O port	External bus	AGT	GPT_OPS, POEG	GPT	RTC	USBFS, CAN	SCI	IIC	SPI/QSPI	SSIE	SDHI	ADC14	DAC12, OPAMP	ACMPLP	SLCDC	CTSU
K5	116	J4	79	G4	-	-	-	-	P503	-	-	GTETRGA	-	-	USB_EXICEN	CTS2_RTS2/SS2 SCK3	-	QIO1	-	-	AN023	-	CMPIN0	SEG51	-
L5	117	H4	80	G5	-	-	-	-	P504	ALE	-	GTETRGB	-	-	USB_ID	SCK2 CTS3_RTS3/SS3	-	QIO2	-	-	AN024	-	-	-	-
K6	118	J5	81	G6	-	-	-	IRQ14	P505	-	-	-	-	-	-	RXD2/MISO2/SCL2	-	QIO3	-	-	AN025	-	-	-	-
L6	119	H5	-	-	-	-	-	IRQ15	P506	-	-	-	-	-	-	TXD2/MOSI2/SDA2	-	-	-	-	AN026	-	-	-	-
N4	120	-	-	-	-	-	-	-	P507	-	-	-	-	-	-	-	-	-	-	-	AN027	-	-	-	-
N5	121	L4	82	K3	-	-	VCC	-	-	-	-	-	-	-	-	-	-	-	-	-	-	-	-	-	-
M5	122	K4	83	J3	-	-	VSS	-	-	-	-	-	-	-	-	-	-	-	-	-	-	-	-	-	-
M6	123	K5	84	J4	52	52	-	IRQ7	P015	-	-	-	-	-	-	-	-	-	-	-	AN010	-	-	-	TS28
N6	124	L5	85	K4	53	53	-	-	P014	-	-	-	-	-	-	-	-	-	-	-	AN009	DA0	-	-	-
M7	125	K6	86	J5	54	54	VREFL	-	P013	-	-	-	-	-	-	-	-	-	-	-	AN008	AMP1+	-	-	-
N7	126	L6	87	K5	55	55	VREFH	-	P012	-	-	-	-	-	-	-	-	-	-	-	AN007	AMP1-	-	-	-
L7	127	J6	88	H5	56	56	AVCC0	-	-	-	-	-	-	-	-	-	-	-	-	-	-	-	-	-	-
L8	128	J7	89	H6	57	57	AVSS0	-	-	-	-	-	-	-	-	-	-	-	-	-	-	-	-	-	-
M8	129	K7	90	J6	58	58	VREFL0	IRQ15	P011	-	-	-	-	-	-	-	-	-	-	-	AN006	AMP2+	-	-	TS31
N8	130	L7	91	K6	59	59	VREFH0	IRQ14	P010	-	-	-	-	-	-	-	-	-	-	-	AN005	AMP2-	-	-	TS30
M9	131	-	-	-	-	-	-	IRQ13	P009	-	-	-	-	-	-	-	-	-	-	-	AN015	-	-	-	-
N9	132	H6	92	J7	-	-	-	IRQ12	P008	-	-	-	-	-	-	-	-	-	-	-	AN014	-	-	-	-
K7	133	H7	93	H7	-	-	-		P007	-	-	-	-	-	-	-	-	-	-	-	AN013	AMP3O	-	-	-
L9	134	H8	94	G7	-	-	-	IRQ11	P006	-	-	-	-	-	-	-	-	-	-	-	AN012	AMP3-	-	-	-
K8	135	L8	95	K7	-	-	-	IRQ10	P005	-	-	-	-	-	-	-	-	-	-	-	AN011	AMP3+	-	-	-
K9	136	J8	96	J8	60	60	-	IRQ3	P004	-	-	-	-	-	-	-	-	-	-	-	AN004	AMP2O	-	-	-
K10	137	K8	97	H8	61	61	-	-	P003	-	-	-	-	-	-	-	-	-	-	-	AN003	AMP1O	-	-	-
M10	138	J9	98	K8	62	62	-	IRQ2	P002	-	-	-	-	-	-	-	-	-	-	-	AN002	AMP0O	-	-	-
N10	139	K9	99	K9	63	63	-	IRQ7	P001	-	-	-	-	-	-	-	-	-	-	-	AN001	AMP0-	-	-	TS22
L10	140	L9	100	K10	64	64	-	IRQ6	P000	-	-	-	-	-	-	-	-	-	-	-	AN000	AMP0+	-		TS21
N11	141	-	-	-	-	-	VSS	-	-	-	-	-	-	-	-	-	-	-	-	-	-	-	-	-	-
N12	142	-	-	-	-	-	VCC	-	-	-	-	-	-	-	-	-	-	-	-	-	-	-	-	-	-
M11	143	L10	-	-	-	-	-	IRQ14	P512	-	-	-	GTIOC0A	-	CTX0	TXD4/MOSI4/SDA4	SCL2	-	-	-	-	-	-	-	-
M12	144	K10	-	-	-	-	-	IRQ15	P511	-	-	-	GTIOC0B	-	CRX0	RXD4/MISO4/SCL4	SDA2	-	-	-	-	-	-	-	-
E5	-	F6	-	-	-	-	NC	-	-	-	-	-	-	-	-	-	-	-	-	-	-	-	-	-	-

2. Electrical Characteristics

Unless otherwise specified, the electrical characteristics of the MCU are defined under the following conditions:

VCC*1 = AVCC0 = VCC_USB*2 = VCC_USB_LDO*2 = 1.6 to 5.5 V, VREFH = VREFH0 = 1.6 to AVCC0, VBATT = 1.6 to 3.6 V, VSS = AVSS0 = VREFL = VREFL0 = VSS_USB = 0 V, Ta = T_{opr}.

Note 1. The typical condition is set to VCC = 3.3V.
Note 2. When USBFS is not used.

Figure 2.1 shows the timing conditions.

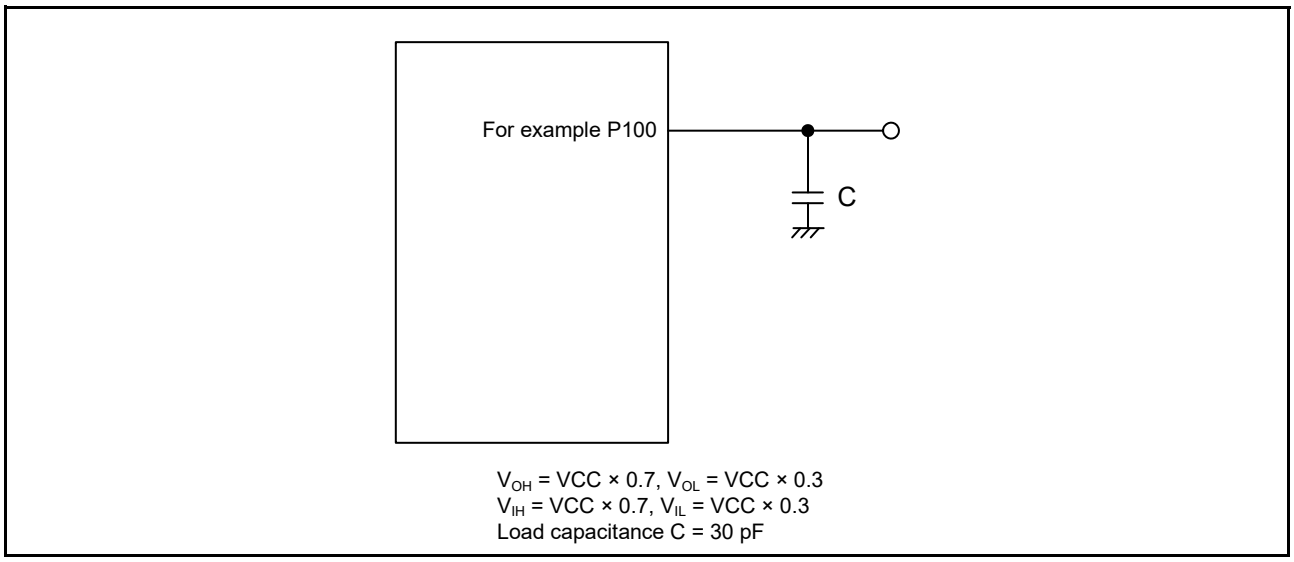

Figure 2.1 Input or output timing measurement conditions

The measurement conditions of timing specifications in each peripheral are recommended for the best peripheral operation. However, make sure to adjust driving abilities of each pin to meet your conditions.

Each function pin used for the same function must select the same drive ability. If the I/O drive ability of each function pin is mixed, the AC specification of each function is not guaranteed.

2.1 Absolute Maximum Ratings

Table 2.1 Absolute maximum ratings

Parameter		Symbol	Value	Unit
Power supply voltage		VCC	-0.5 to +6.5	V
Input voltage	5V-tolerant ports*1	V_{in}	-0.3 to +6.5	V
	P000 to P015	V_{in}	-0.3 to AVCC0 + 0.3	V
	Others	V_{in}	-0.3 to VCC + 0.3	V
Reference power supply voltage		VREFH0	-0.3 to +6.5	V
		VREFH		V
VBATT power supply voltage		VBATT	-0.5 to +6.5	V
Analog power supply voltage		AVCC0	-0.5 to +6.5	V
USB power supply voltage		VCC_USB	-0.5 to +6.5	V
		VCC_USB_LDO	-0.5 to +6.5	V
Analog input voltage	When AN000 to AN015 are used	V_{AN}	-0.3 to AVCC0 + 0.3	V
	When AN016 to AN027 are used		-0.3 to VCC + 0.3	V
LCD voltage	VL1 voltage	V_{L1}	-0.3 to +2.8	V
	VL2 voltage	V_{L2}	-0.3 to +6.5	V
	VL3 voltage	V_{L3}	-0.3 to +6.5	V
	VL4 voltage	V_{L4}	-0.3 to +6.5	V
Operating temperature*2, *3, *4		T_{opr}	-40 to +105	°C
			-40 to +85	°C
Storage temperature		T_{stg}	-55 to +125	°C

Note 1. Ports P205, P206, P400 to P404, P407, P408, P511, P512 are 5V-tolerant.
Note 2. See section 2.2.1, Tj/Ta Definition.
Note 3. Contact Renesas Electronics sales office for information on derating operation under Ta = +85°C to +105°C. Derating is the systematic reduction of load for improved reliability.
Note 4. The upper limit of operating temperature is 85°C or 105°C, depending on the product. For details, see section 1.3, Part Numbering.

Caution: Permanent damage to the MCU may result if absolute maximum ratings are exceeded.
To preclude any malfunctions due to noise interference, insert capacitors with high frequency characteristics between the VCC and VSS pins, between the AVCC0 and AVSS0 pins, between the VCC_USB and VSS_USB pins, between the VREFH0 and VREFL0 pins, and between the VREFH and VREFL pins. Place capacitors of about 0.1 µF as close as possible to every power supply pin and use the shortest and heaviest possible traces. Also, connect capacitors as stabilization capacitance.
Connect the VCL pin to a VSS pin by a 4.7 µF capacitor. The capacitor must be placed close to the pin.
Do not input signals or an I/O pull-up power supply while the device is not powered. The current injection that results from input of such a signal or I/O pull-up might cause malfunction and the abnormal current that passes in the device at this time might cause degradation of internal elements.

Table 2.2 Recommended operating conditions

Parameter	Symbol	Value	Min	Typ	Max	Unit
Power supply voltages	VCC*1, *2	When USBFS is not used	1.6	-	5.5	V
		When USBFS is used USB Regulator Disable	VCC_USB	-	3.6	V
		When USBFS is used USB Regulator Enable	VCC_USB _LDO	-	5.5	V
	VSS		-	0	-	V
USB power supply voltages	VCC_USB	When USBFS is not used	-	VCC	-	V
		When USBFS is used USB Regulator Disable (Input)	3.0	3.3	3.6	V
	VCC_USB_LDO	When USBFS is not used	-	VCC	-	V
		When USBFS is used USB Regulator Disable	-	VCC	-	V
		When USBFS is used USB Regulator Enable	3.8	-	5.5	V
	VSS_USB		-	0	-	V
VBATT power supply voltage	VBATT	When the battery backup function is not used	-	VCC	-	V
		When the battery backup function is used	1.6	-	3.6	V
Analog power supply voltages	AVCC0*1, *2		1.6	-	5.5	V
	AVSS0		-	0	-	V
	VREFH0	When used as ADC14 Reference	1.6	-	AVCC0	V
	VREFL0		-	0	-	V
	VREFH	When used as DAC12 Reference	1.6	-	AVCC0	V
	VREFL		-	0	-	V

Note 1. Use AVCC0 and VCC under the following conditions:
AVCC0 and VCC can be set individually within the operating range when VCC ≥ 2.2 V and AVCC0 ≥ 2.2 V
AVCC0 = VCC when VCC < 2.2V or AVCC0 < 2.2V.

Note 2. When powering on the VCC and AVCC0 pins, power them on at the same time or the VCC pin first and then the AVCC0 pin.

2.2 DC Characteristics

2.2.1 Tj/Ta Definition

Table 2.3 DC characteristics
Conditions: Products with operating temperature (T_a) -40 to +105°C

Parameter	Symbol	Typ	Max	Unit	Test conditions
Permissible junction temperature	Tj	-	125	°C	High-speed mode Middle-speed mode Low-voltage mode Low-speed mode Subosc-speed mode
			105*1		

Note: Make sure that Tj = T_a + θja × total power consumption (W), where total power consumption = (VCC – V_{OH}) × ΣI_{OH} + V_{OL} × ΣI_{OL} + I_{CCmax} × VCC.
Note 1. The upper limit of operating temperature is 85°C or 105°C, depending on the product. For details, see section 1.3, Part Numbering. If the part number shows the operation temperature at 85°C, then the maximum value of Tj is 105°C, otherwise, it is 125°C.

2.2.2 I/O V_{IH}, V_{IL}

Table 2.4 I/O V_{IH}, V_{IL} (1)
Conditions: VCC = AVCC0 = VCC_USB = VCC_USB_LDO = 2.7 to 5.5 V, VBATT = 1.6 to 3.6 V, VSS = AVSS0 = 0 V

Parameter		Symbol	Min	Typ	Max	Unit	Test conditions
Schmitt trigger input voltage	IIC*1 (except for SMBus)	V_{IH}	VCC × 0.7	-	5.8	V	-
		V_{IL}	-	-	VCC × 0.3		
		ΔV_T	VCC × 0.05	-	-		
	RES, NMI Other peripheral input pins excluding IIC	V_{IH}	VCC × 0.8	-	-		
		V_{IL}	-	-	VCC × 0.2		
		ΔV_T	VCC × 0.1	-	-		
Input voltage (except for Schmitt trigger input pin)	IIC (SMBus)*2	V_{IH}	2.2	-	-		VCC = 3.6 to 5.5 V
		V_{IH}	2.0	-	-		VCC = 2.7 to 3.6 V
		V_{IL}	-	-	0.8		-
	5V-tolerant ports*3	V_{IH}	VCC × 0.8	-	5.8		
		V_{IL}	-	-	VCC × 0.2		
	P914, P915	V_{IH}	VCC_USB × 0.8	-	VCC_USB + 0.3		
		V_{IL}	-	-	VCC_USB × 0.2		
	P000 to P015	V_{IH}	AVCC0 × 0.8	-	-		
		V_{IL}	-	-	AVCC0 × 0.2		
	EXTAL D00 to D15 Input ports pins except for P000 to P015, P914, P915	V_{IH}	VCC × 0.8	-	-		
		V_{IL}	-	-	VCC × 0.2		
When V_{BATT} power supply is selected	P402, P403, P404	V_{IH}	V_{BATT} × 0.8	-	V_{BATT} + 0.3		
		V_{IL}	-	-	V_{BATT} × 0.2		
		ΔV_T	V_{BATT} × 0.05	-	-		

Note 1. P205, P206, P400, P401, P407, P408, P511, P512 (total 8 pins).
Note 2. P100, P101, P204, P205, P206, P400, P401, P407, P408, P511, P512 (total 11 pins).
Note 3. P205, P206, P400 to P404, P407, P408, P511, P512 (total 11 pins).

Table 2.5 I/O V_{IH}, V_{IL} (2)

Conditions: VCC = AVCC0 = VCC_USB = VCC_USB_LDO = 1.6 to 2.7 V, VBATT = 1.6 to 3.6 V, VSS = AVSS0 = 0 V

Parameter		Symbol	Min	Typ	Max	Unit	Test conditions
Schmitt trigger input voltage	RES, NMI Peripheral input pins	V_{IH}	VCC × 0.8	-	-	V	-
		V_{IL}	-	-	VCC × 0.2		
		ΔV_T	VCC × 0.01	-	-		
Input voltage (except for Schmitt trigger input pin)	5V-tolerant ports*1	V_{IH}	VCC × 0.8	-	5.8		
		V_{IL}	-	-	VCC × 0.2		
	P914, P915	V_{IH}	VCC_USB × 0.8	-	VCC_USB + 0.3		
		V_{IL}	-	-	VCC_USB × 0.2		
	P000 to P015	V_{IH}	AVCC0 × 0.8	-	-		
		V_{IL}	-	-	AVCC0 × 0.2		
	EXTAL D00 to D15 Input ports pins except for P000 to P015, P914, P915	V_{IH}	VCC × 0.8	-	-		
		V_{IL}	-	-	VCC × 0.2		
When V_{BATT} power supply is selected	P402, P403, P404	V_{IH}	V_{BATT} × 0.8	-	V_{BATT} + 0.3		
		V_{IL}	-	-	V_{BATT} × 0.2		
		ΔV_T	V_{BATT} × 0.01	-	-		

Note 1. P205, P206, P400 to P404, P407, P408, P511, P512 (total 11 pins)

2.2.3 I/O I_{OH}, I_{OL}

Table 2.6 I/O I_{OH}, I_{OL} (1 of 2)
Conditions: VCC = AVCC0 = VCC_USB = VCC_USB_LCO = 1.6 to 5.5 V

Parameter			Symbol	Min	Typ	Max	Unit
Permissible output current (average value per pin)	Ports P212, P213	-	I_{OH}	-	-	-4.0	mA
			I_{OL}	-	-	4.0	mA
	Port P408	Low drive*1	I_{OH}	-	-	-4.0	mA
			I_{OL}	-	-	4.0	mA
		Middle drive for IIC Fast-mode*4 VCC = 2.7 to 5.5 V	I_{OH}	-	-	-8.0	mA
			I_{OL}	-	-	8.0	mA
		Middle drive*2 VCC = 3.0 to 5.5 V	I_{OH}	-	-	-20.0	mA
			I_{OL}	-	-	20.0	mA
	Port P409	Low drive*1	I_{OH}	-	-	-4.0	mA
			I_{OL}	-	-	4.0	mA
		Middle drive*2 VCC = 2.7 to 3.0 V	I_{OH}	-	-	-8.0	mA
			I_{OL}	-	-	8.0	mA
		Middle drive*2 VCC = 3.0 to 5.5 V	I_{OH}	-	-	-20.0	mA
			I_{OL}	-	-	20.0	mA
	Ports P100 to P115, P201 to P204, P300 to P315, P500 to P503, P600 to P606, P608 to P614, P800 to P809, P900 to P902 (total 67 pins)	Low drive*1	I_{OH}	-	-	-4.0	mA
			I_{OL}	-	-	4.0	mA
		Middle drive*2	I_{OH}	-	-	-4.0	mA
			I_{OL}	-	-	8.0	mA
	Ports P914, P915	-	I_{OH}	-	-	-4.0	mA
			I_{OL}	-	-	4.0	mA
	Other output pin*3	Low drive*1	I_{OH}	-	-	-4.0	mA
			I_{OL}	-	-	4.0	mA
		Middle drive*2	I_{OH}	-	-	-8.0	mA
			I_{OL}	-	-	8.0	mA

Table 2.6 I/O I_{OH}, I_{OL} (2 of 2)

Conditions: VCC = AVCC0 = VCC_USB = VCC_USB_LCO = 1.6 to 5.5 V

Parameter			Symbol	Min	Typ	Max	Unit
Permissible output current (Max value per pin)	Ports P212, P213	-	I_{OH}	-	-	-4.0	mA
			I_{OL}	-	-	4.0	mA
	Port P408	Low drive*1	I_{OH}	-	-	-4.0	mA
			I_{OL}	-	-	4.0	mA
		Middle drive for IIC Fast-mode*4 VCC = 2.7 to 5.5 V	I_{OH}	-	-	-8.0	mA
			I_{OL}	-	-	8.0	mA
		Middle drive*2 VCC = 3.0 to 5.5 V	I_{OH}	-	-	-20.0	mA
			I_{OL}	-	-	20.0	mA
	Port P409	Low drive*1	I_{OH}	-	-	-4.0	mA
			I_{OL}	-	-	4.0	mA
		Middle drive*2 VCC = 2.7 to 3.0 V	I_{OH}	-	-	-8.0	mA
			I_{OL}	-	-	8.0	mA
		Middle drive*2 VCC = 3.0 to 5.5 V	I_{OH}	-	-	-20.0	mA
			I_{OL}	-	-	20.0	mA
	Ports P100 to P115, P201 to P204, P300 to P315, P500 to P503, P600 to P606, P608 to P614, P800 to P809, P900 to P902 (total 67 pins)	Low drive*1	I_{OH}	-	-	-4.0	mA
			I_{OL}	-	-	4.0	mA
		Middle drive*2	I_{OH}	-	-	-4.0	mA
			I_{OL}	-	-	8.0	mA
	Ports P914, P915	-	I_{OH}	-	-	-4.0	mA
			I_{OL}	-	-	4.0	mA
	Other output pin*3	Low drive*1	I_{OH}	-	-	-4.0	mA
			I_{OL}	-	-	4.0	mA
		Middle drive*2	I_{OH}	-	-	-8.0	mA
			I_{OL}	-	-	8.0	mA
Permissible output current (max value total pins)	Total of ports P000 to P015		$\Sigma I_{OH\ (max)}$	-	-	-30	mA
			$\Sigma I_{OL\ (max)}$	-	-	30	mA
	Ports P914, P915		$\Sigma I_{OH\ (max)}$	-	-	-4.0	mA
			$\Sigma I_{OL\ (min)}$	-	-	4.0	mA
	Total of all output pin*5		$\Sigma I_{OH\ (max)}$	-	-	-60	mA
			$\Sigma I_{OL\ (max)}$	-	-	60	mA

Caution: To protect the reliability of the MCU, the output current values should not exceed the values in this table. The average output current indicates the average value of current measured during 100 μs.

Note 1. This is the value when low driving ability is selected with the Port Drive Capability bit in PmnPFS register.
Note 2. This is the value when middle driving ability is selected with the Port Drive Capability bit in PmnPFS register.
Note 3. Except for ports P200, P214, P215, which are input ports.
Note 4. This is the value when middle driving ability for IIC Fast-mode is selected with the Port Drive Capability bit in PmnPFS register.
Note 5. For details on the permissible output current used with CTSU, see section 2.11, CTSU Characteristics.

2.2.4 I/O V_{OH}, V_{OL}, and Other Characteristics

Table 2.7 I/O V_{OH}, V_{OL} (1)
Conditions: VCC = AVCC0 = VCC_USB = VCC_USB_LCO = 4.0 to 5.5 V

Parameter			Symbol	Min	Typ	Max	Unit	Test conditions
Output voltage	IIC*1		V_{OL}	-	-	0.4	V	I_{OL} = 3.0 mA
			V_{OL}*2, *5	-	-	0.6		I_{OL} = 6.0 mA
	Ports P408, P409*2, *3		V_{OH}	VCC - 1.0	-	-		I_{OH} = -20 mA
			V_{OL}	-	-	1.0		I_{OL} = 20 mA
	Ports P000 to P015	Low drive	V_{OH}	AVCC0 - 0.8	-	-		I_{OH} = -2.0 mA
			V_{OL}	-	-	0.8		I_{OL} = 2.0 mA
		Middle drive	V_{OH}	AVCC0 - 0.8	-	-		I_{OH} = -4.0 mA
			V_{OL}	-	-	0.8		I_{OL} = 4.0 mA
	Ports P914, P915		V_{OH}	VCC_USB - 0.8	-	-		I_{OH} = -2.0 mA
			V_{OL}	-	-	0.8		I_{OL} = 2.0 mA
	Other output pins*4	Low drive	V_{OH}	VCC - 0.8	-	-		I_{OH} = -2.0 mA
			V_{OL}	-	-	0.8		I_{OL} = 2.0 mA
		Middle drive*6	V_{OH}	VCC - 0.8	-	-		I_{OH} = -4.0 mA
			V_{OL}	-	-	0.8		I_{OL} = 4.0 mA

Note 1. P100, P101, P204, P205, P206, P400, P401, P407, P408, P511, P512 (total 11 pins).
Note 2. This is the value when middle driving ability is selected with the Port Drive Capability bit in PmnPFS register.
Note 3. Based on characterization data, not tested in production.
Note 4. Except for ports P200, P214, P215, which are input ports.
Note 5. This is the value when middle driving ability for IIC is selected with the Port Drive Capability bit in PmnPFS register for P408.
Note 6. Except for P212, P213.

Table 2.8 I/O V_{OH}, V_{OL} (2)
Conditions: VCC = AVCC0 = VCC_USB = VCC_USB_LCO = 2.7 to 4.0 V

Parameter			Symbol	Min	Typ	Max	Unit	Test conditions
Output voltage	IIC*1		V_{OL}	-	-	0.4	V	I_{OL} = 3.0 mA
			V_{OL}*2, *5	-	-	0.6		I_{OL} = 6.0 mA
	Ports P408, P409*2, *3		V_{OH}	VCC - 1.0	-	-		I_{OH} = -20 mA VCC = 3.3 V
			V_{OL}	-	-	1.0		I_{OL} = 20 mA VCC = 3.3 V
	Ports P000 to P015	Low drive	V_{OH}	AVCC0 - 0.5	-	-		I_{OH} = -1.0 mA
			V_{OL}	-	-	0.5		I_{OL} = 1.0 mA
		Middle drive	V_{OH}	AVCC0 - 0.5	-	-		I_{OH} = -2.0 mA
			V_{OL}	-	-	0.5		I_{OL} = 2.0 mA
	Ports P914, P915		V_{OH}	VCC_USB - 0.5	-	-		I_{OH} = -1.0 mA
			V_{OL}	-	-	0.5		I_{OL} = 1.0 mA
	Other output pins*4	Low drive	V_{OH}	VCC - 0.5	-	-		I_{OH} = -1.0 mA
			V_{OL}	-	-	0.5		I_{OL} = 1.0 mA
		Middle drive*6	V_{OH}	VCC - 0.5	-	-		I_{OH} = -2.0 mA
			V_{OL}	-	-	0.5		I_{OL} = 2.0 mA

Note 1. P100, P101, P204, P205, P206, P400, P401, P407, P408, P511, P512 (total 11 pins).
Note 2. This is the value when middle driving ability is selected with the Port Drive Capability bit in PmnPFS register.
Note 3. Based on characterization data, not tested in production.
Note 4. Except for ports P200, P214, P215, which are input ports.
Note 5. This is the value when middle driving ability for IIC is selected with the Port Drive Capability bit in PmnPFS register for P408.
Note 6. Except for P212, P213.

Table 2.9 I/O V_{OH}, V_{OL} (3)
Conditions: VCC = AVCC0 = VCC_USB = VCC_USB_LCO = 1.6 to 2.7 V

Parameter			Symbol	Min	Typ	Max	Unit	Test conditions
Output voltage	Ports P000 to P015	Low drive	V_{OH}	AVCC0 - 0.3	-	-	V	I_{OH} = -0.5 mA
			V_{OL}	-	-	0.3		I_{OL} = 0.5 mA
		Middle drive	V_{OH}	AVCC0 - 0.3	-	-		I_{OH} = -1.0 mA
			V_{OL}	-	-	0.3		I_{OL} = 1.0 mA
	Ports P914, P915		V_{OH}	VCC_USB - 0.3	-	-		I_{OH} = -0.5 mA
			V_{OL}	-	-	0.3		I_{OL} = 0.5 mA
	Other output pins*1	Low drive	V_{OH}	VCC - 0.3	-	-		I_{OH} = -0.5 mA
			V_{OL}	-	-	0.3		I_{OL} = 0.5 mA
		Middle drive*2	V_{OH}	VCC - 0.3	-	-		I_{OH} = -1.0 mA
			V_{OL}	-	-	0.3		I_{OL} = 1.0 mA

Note 1. Except for ports P200, P214, P215, which are input ports.
Note 2. Except for P212, P213.

Table 2.10 I/O other characteristics
Conditions: VCC = AVCC0 = 1.6 to 5.5 V

Parameter		Symbol	Min	Typ	Max	Unit	Test conditions
Input leakage current	RES, P200, P214, P215	$\lvert I_{in} \rvert$	-	-	1.0	μA	V_{in} = 0 V V_{in} = VCC
Three-state leakage current (off state)	5V-tolerant ports	$\lvert I_{TSI} \rvert$	-	-	1.0	μA	V_{in} = 0 V V_{in} = 5.8 V
	Other ports (except for ports P200, P214, P215 and 5 V tolerant)		-	-	1.0		V_{in} = 0 V V_{in} = VCC
Input pull-up resistor	All ports (except for ports P200, P214, P215, P914, P915)	R_U	10	20	50	kΩ	V_{in} = 0 V
Input capacitance	P914, P915, P100 to P103, P111, P112, P200	C_{in}	-	-	30	pF	V_{in} = 0 V f = 1 MHz T_a = 25°C
	Other input pins		-	-	15		

2.2.5 I/O Pin Output Characteristics of Low Drive Capacity

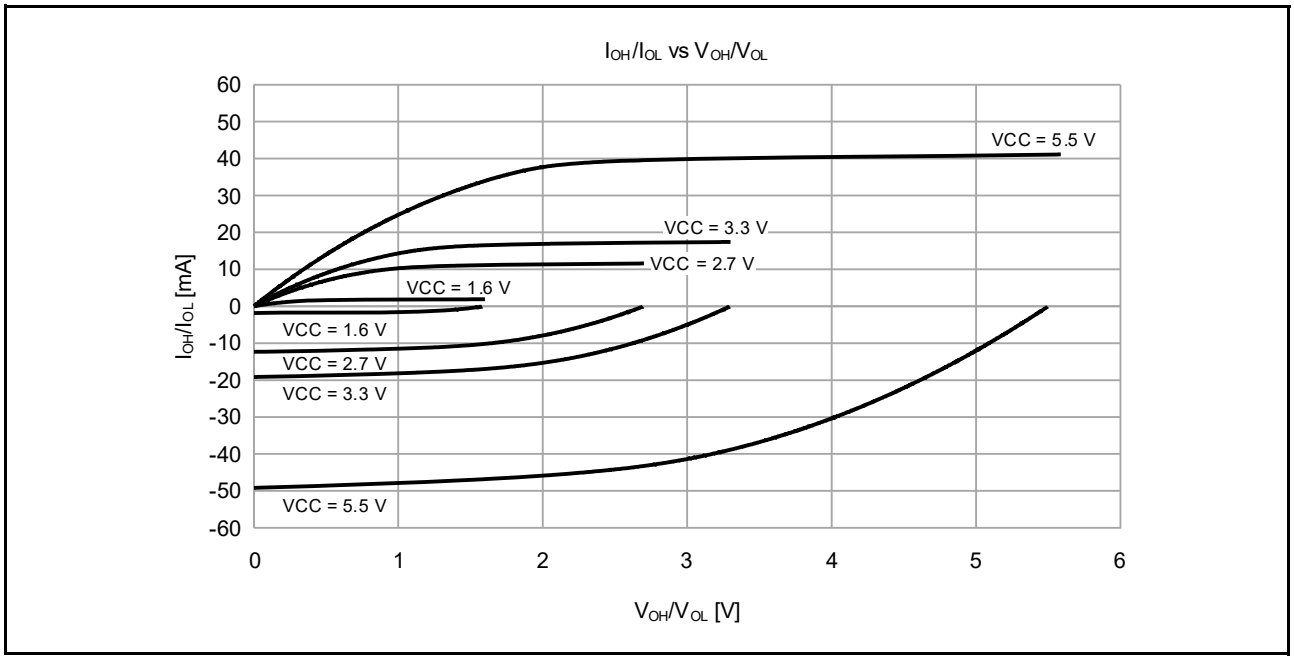

Figure 2.2 **V_{OH}/V_{OL} and I_{OH}/I_{OL} voltage characteristics at Ta = 25°C when low drive output is selected (reference data)**

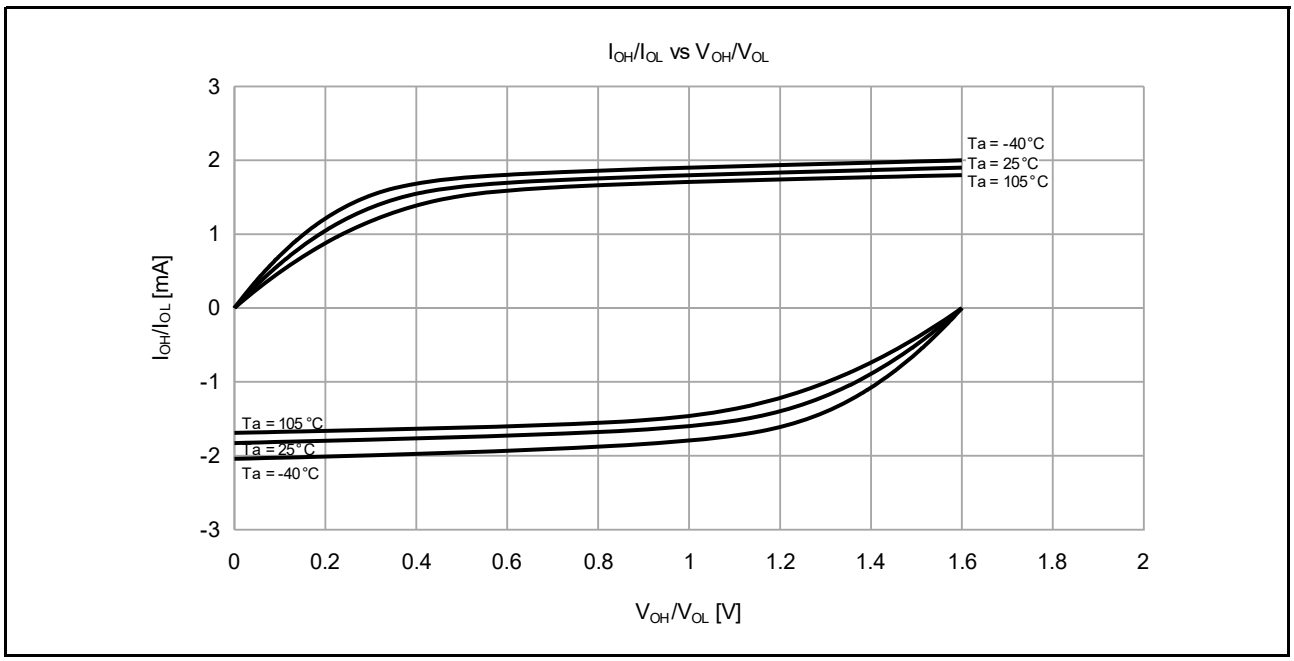

Figure 2.3 **V_{OH}/V_{OL} and I_{OH}/I_{OL} temperature characteristics at VCC = 1.6 V when low drive output is selected (reference data)**

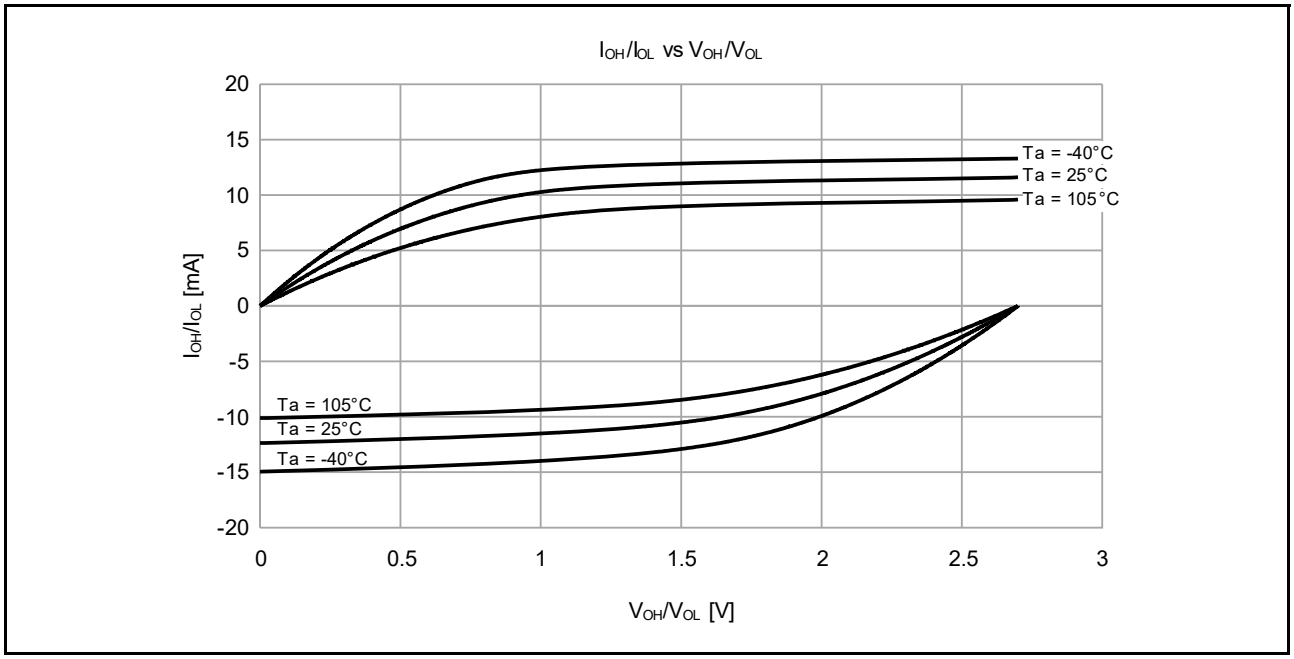

Figure 2.4 **V_{OH}/V_{OL} and I_{OH}/I_{OL} temperature characteristics at VCC = 2.7 V when low drive output is selected (reference data)**

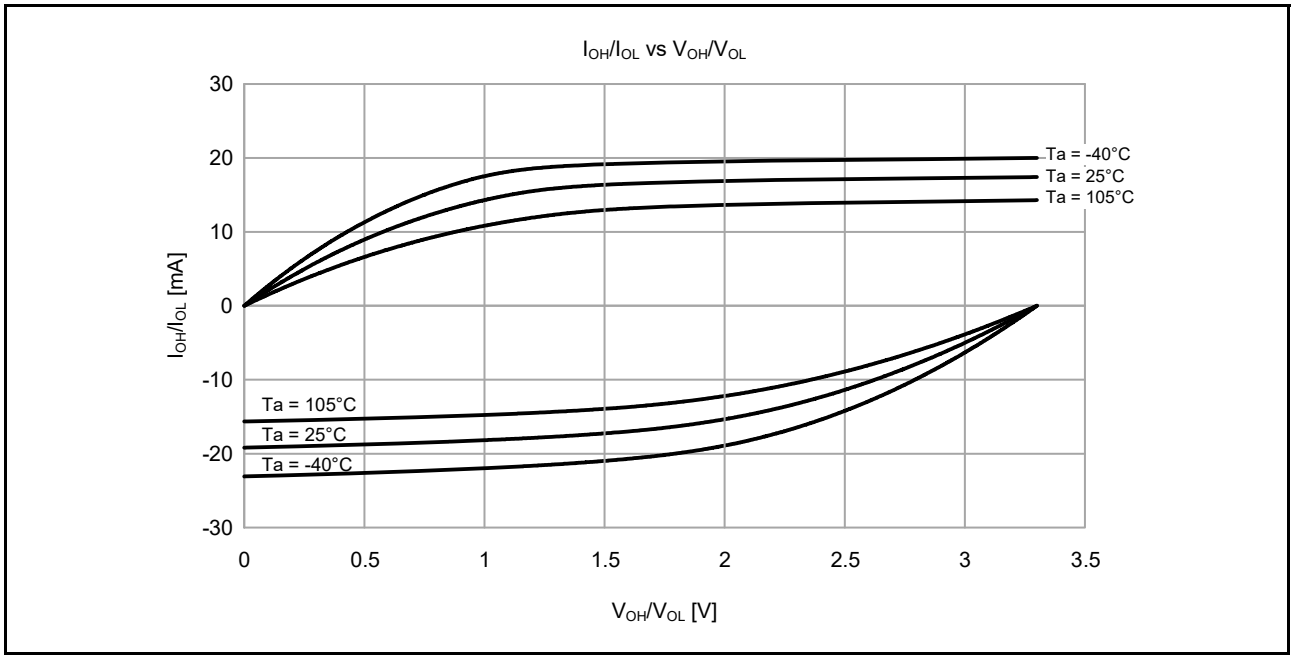

Figure 2.5 **V_{OH}/V_{OL} and I_{OH}/I_{OL} temperature characteristics at VCC = 3.3 V when low drive output is selected (reference data)**

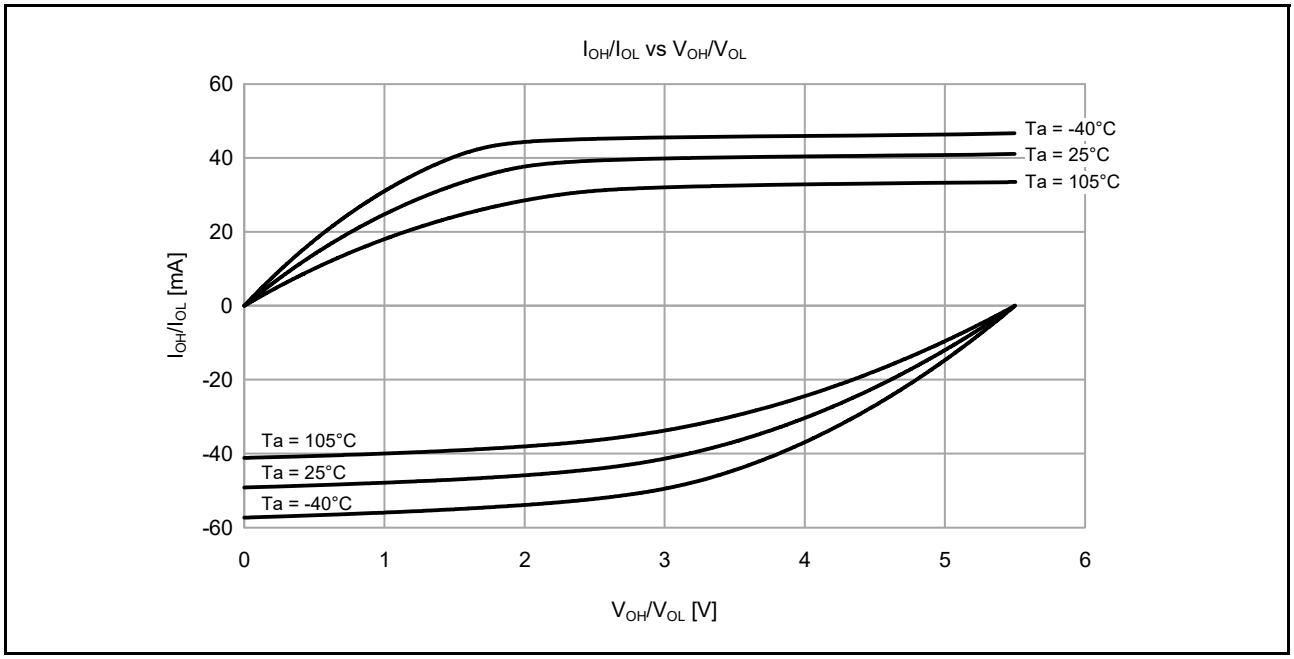

Figure 2.6 **V_{OH}/V_{OL} and I_{OH}/I_{OL} temperature characteristics at VCC = 5.5 V when low drive output is selected (reference data)**

2.2.6 I/O Pin Output Characteristics of Middle Drive Capacity

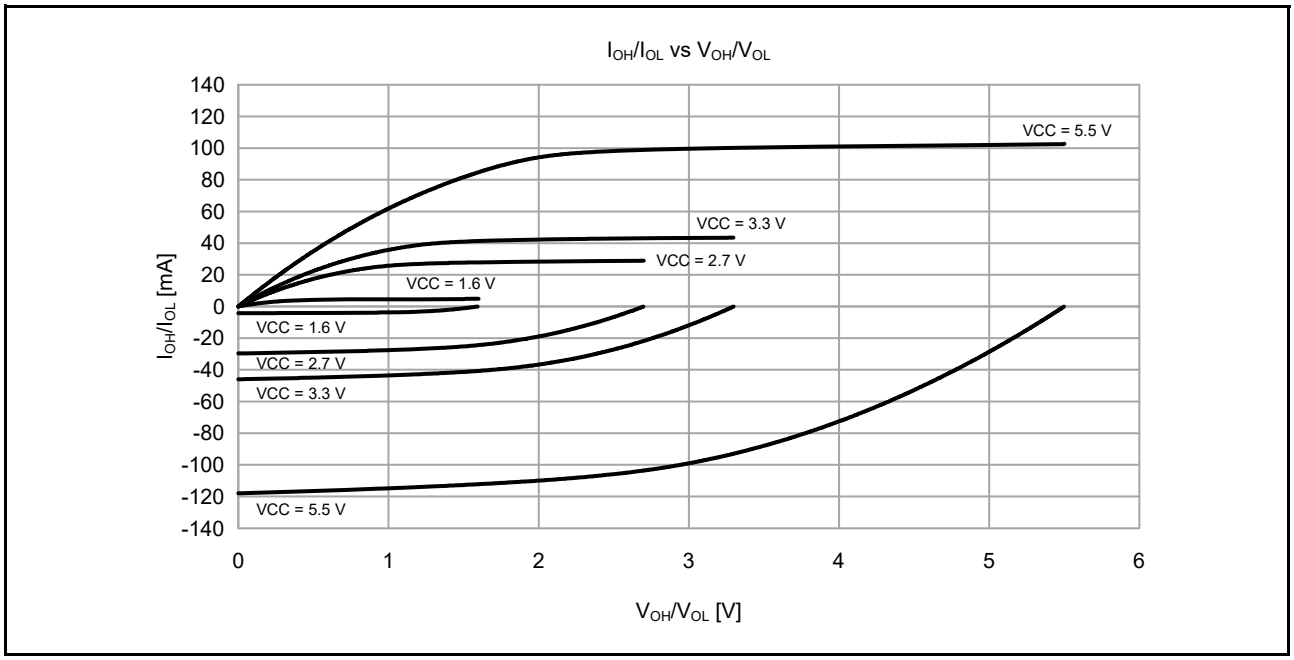

Figure 2.7 **V_{OH}/V_{OL} and I_{OH}/I_{OL} voltage characteristics at Ta = 25°C when middle drive output is selected (reference data)**

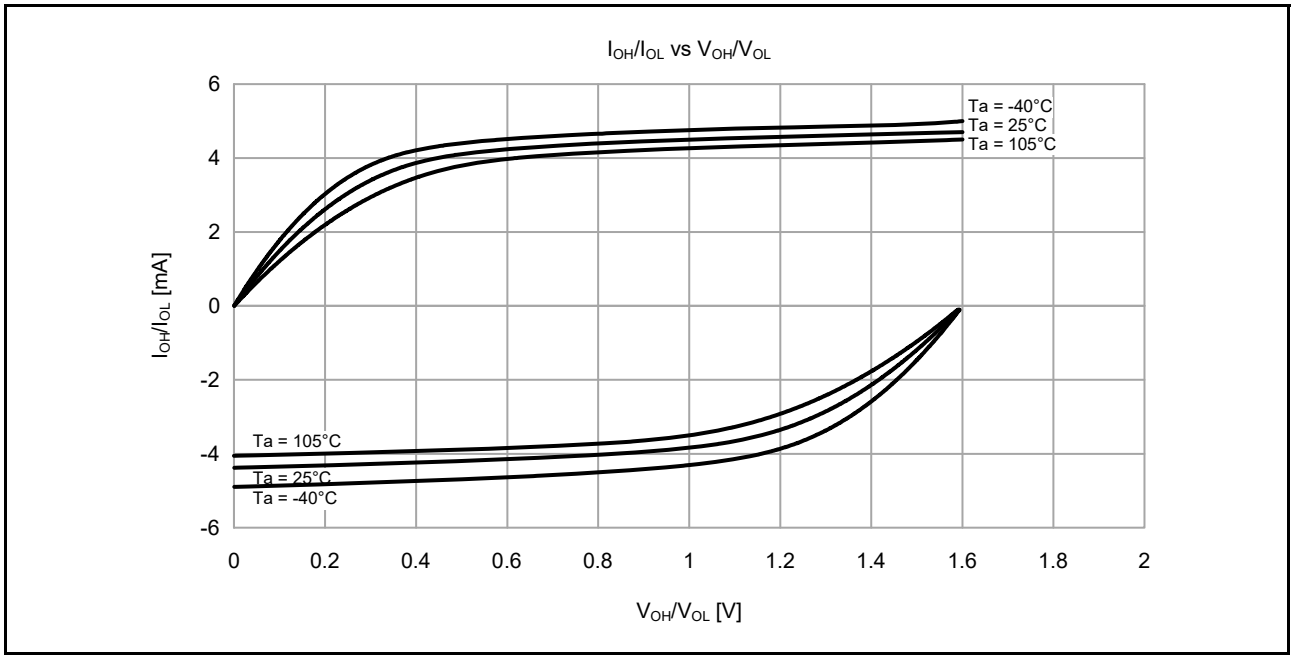

Figure 2.8 **V_{OH}/V_{OL} and I_{OH}/I_{OL} temperature characteristics at VCC = 1.6 V when middle drive output is selected (reference data)**

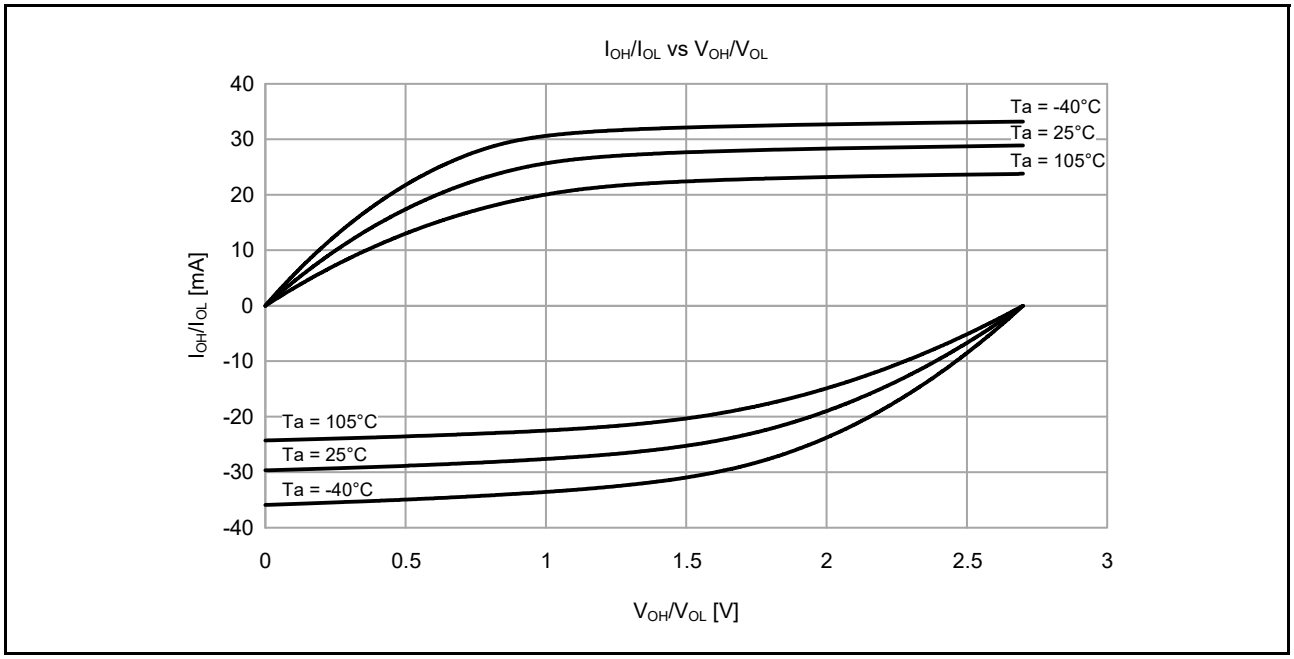

Figure 2.9 **V_{OH}/V_{OL} and I_{OH}/I_{OL} temperature characteristics at VCC = 2.7 V when middle drive output is selected (reference data)**

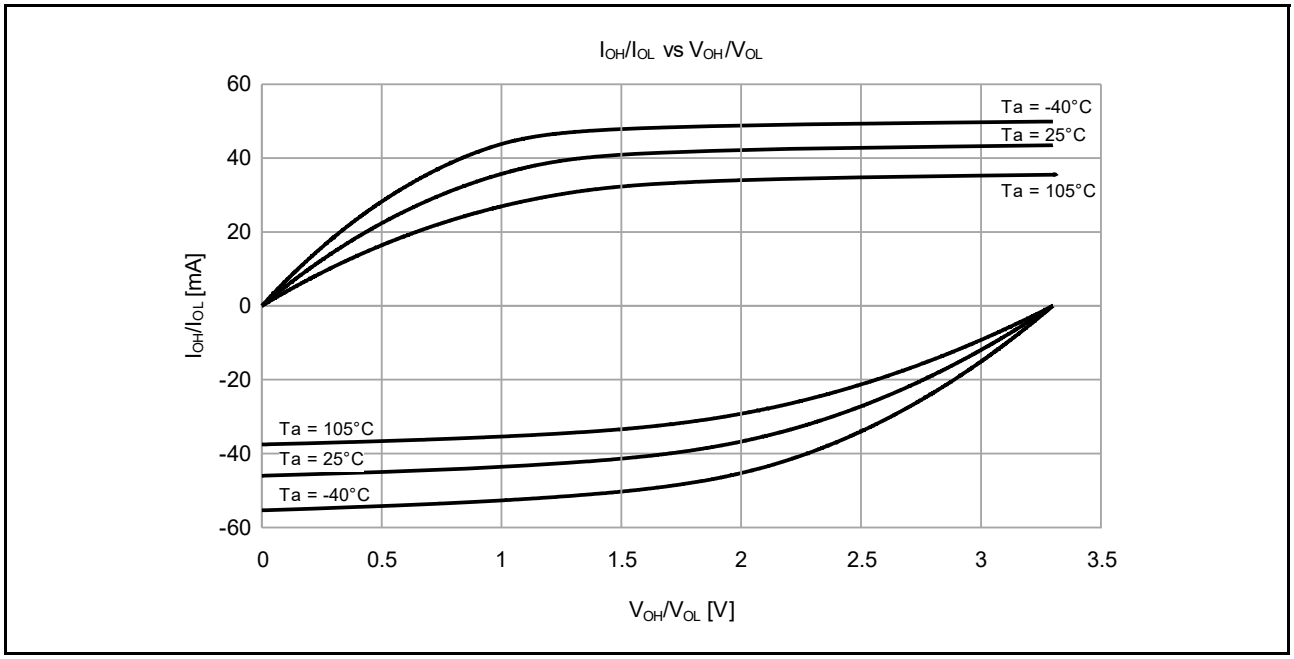

Figure 2.10 **V_{OH}/V_{OL} and I_{OH}/I_{OL} temperature characteristics at VCC = 3.3 V when middle drive output is selected (reference data)**

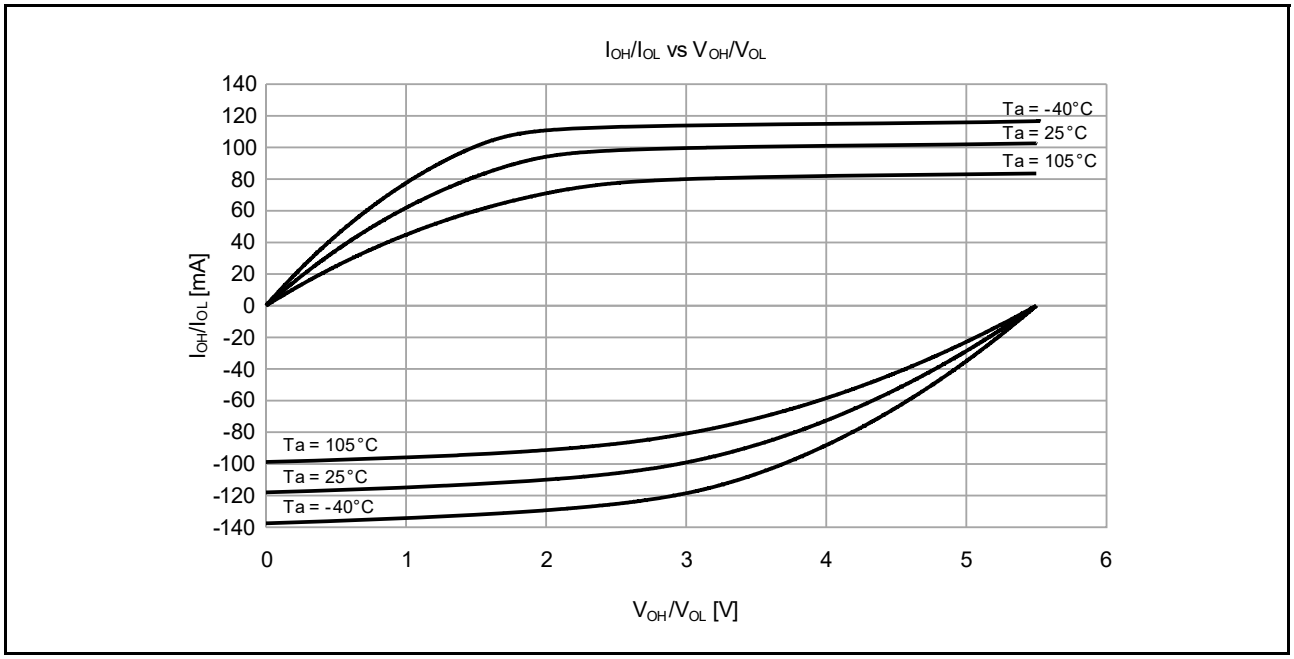

Figure 2.11 **V_{OH}/V_{OL} and I_{OH}/I_{OL} temperature characteristics at VCC = 5.5 V when middle drive output is selected (reference data)**

2.2.7 P408, P409 I/O Pin Output Characteristics of Middle Drive Capacity

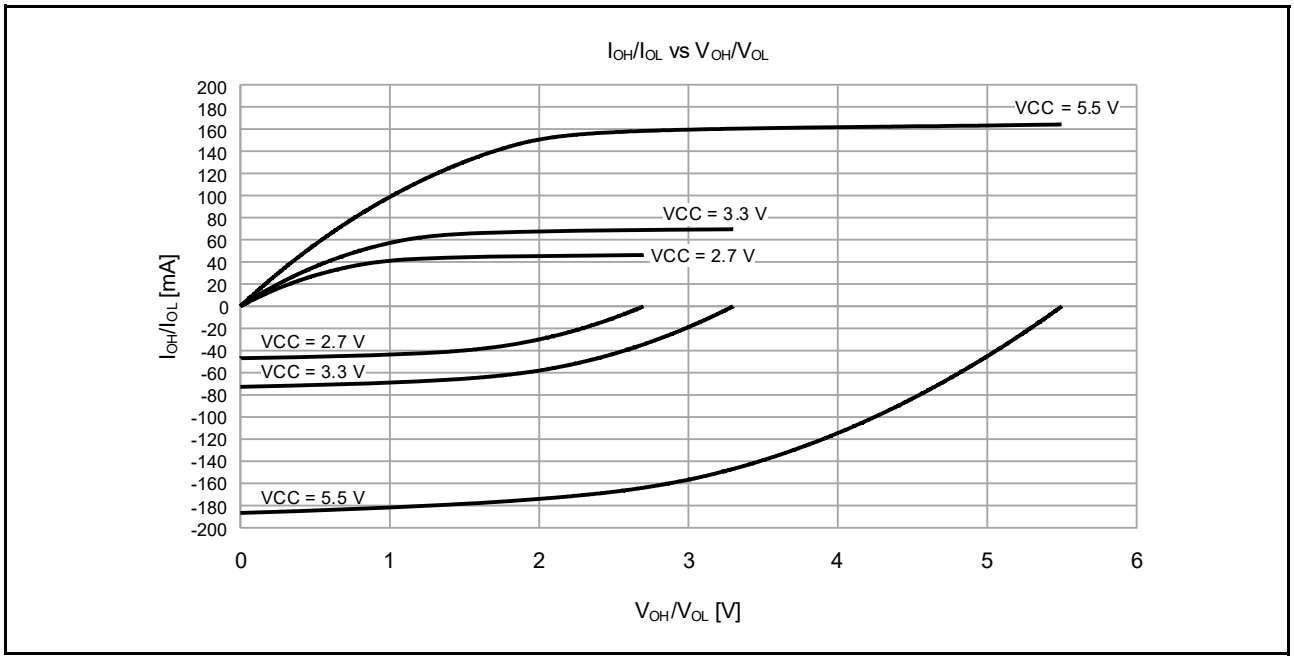

Figure 2.12 **V_{OH}/V_{OL} and I_{OH}/I_{OL} voltage characteristics at Ta = 25°C when middle drive output is selected (reference data)**

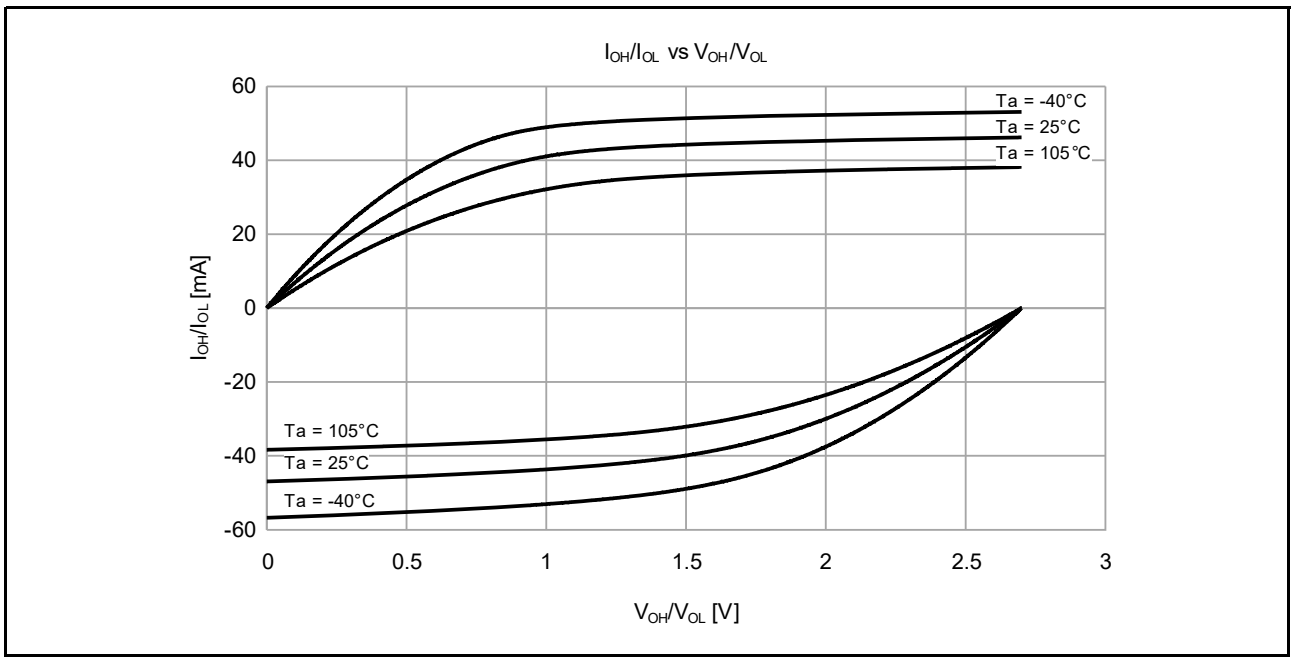

Figure 2.13 **V_{OH}/V_{OL} and I_{OH}/I_{OL} temperature characteristics at VCC = 2.7 V when middle drive output is selected (reference data)**

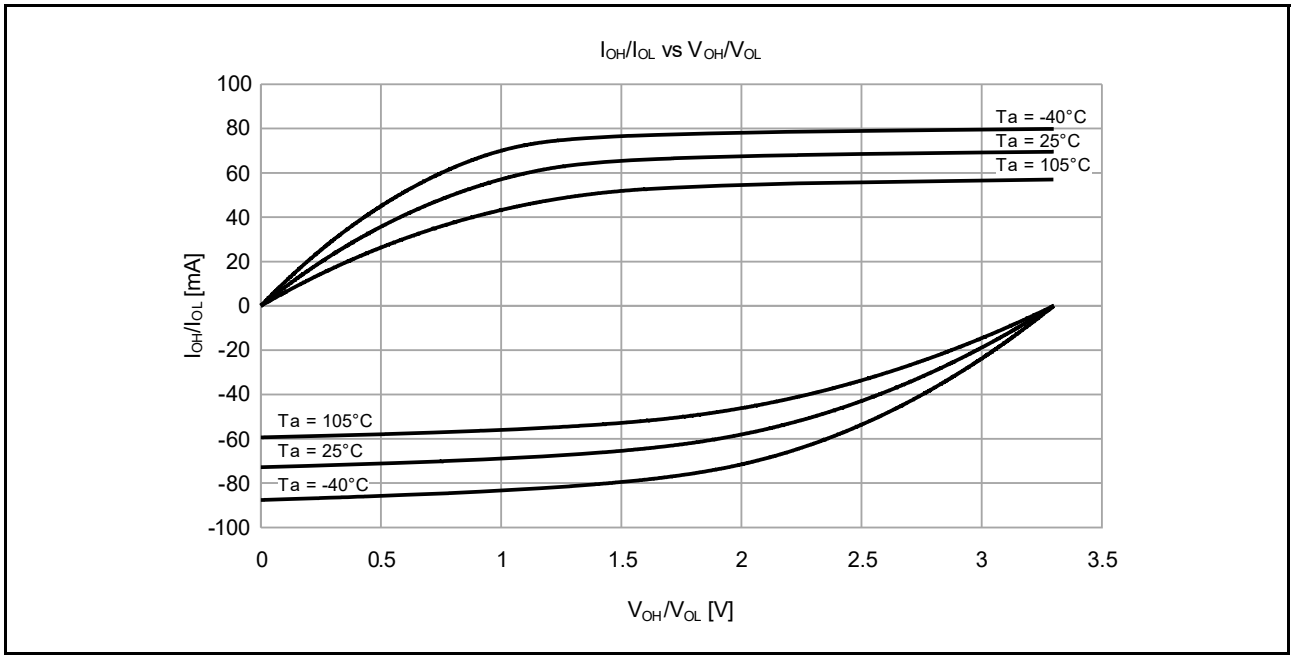

Figure 2.14 **V_{OH}/V_{OL} and I_{OH}/I_{OL} temperature characteristics at VCC = 3.3 V when middle drive output is selected (reference data)**

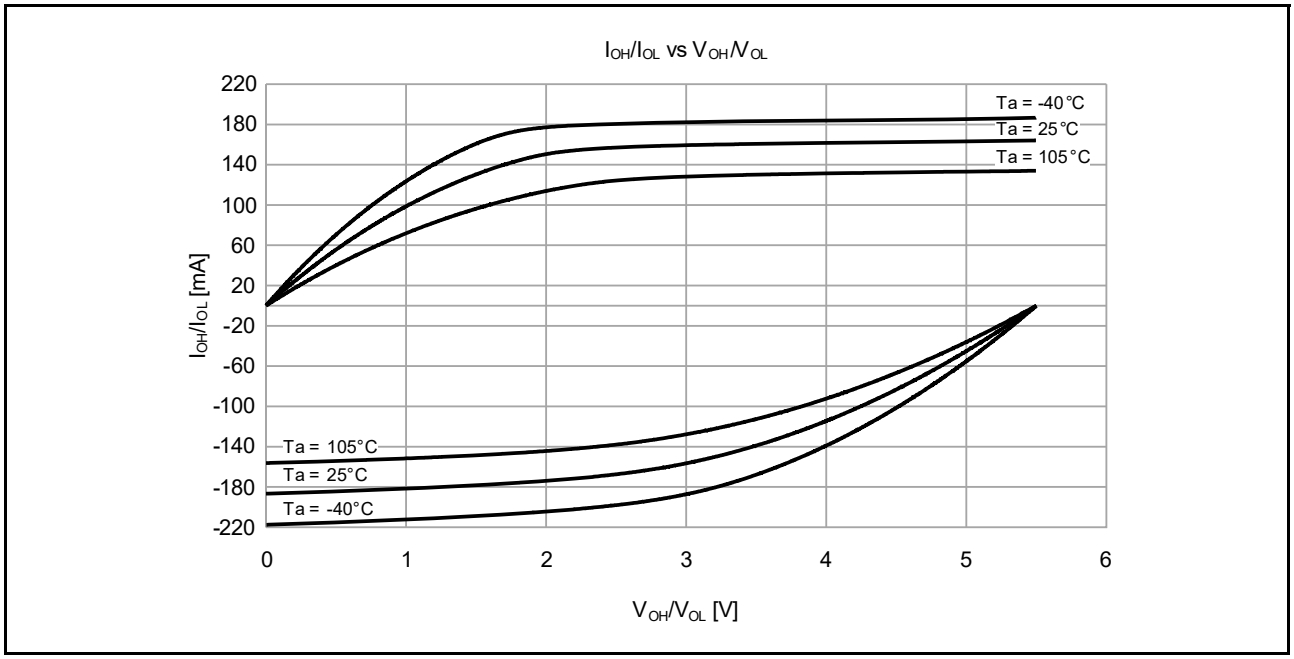

Figure 2.15 **V_{OH}/V_{OL} and I_{OH}/I_{OL} temperature characteristics at VCC = 5.5 V when middle drive output is selected (reference data)**

2.2.8 IIC I/O Pin Output Characteristics

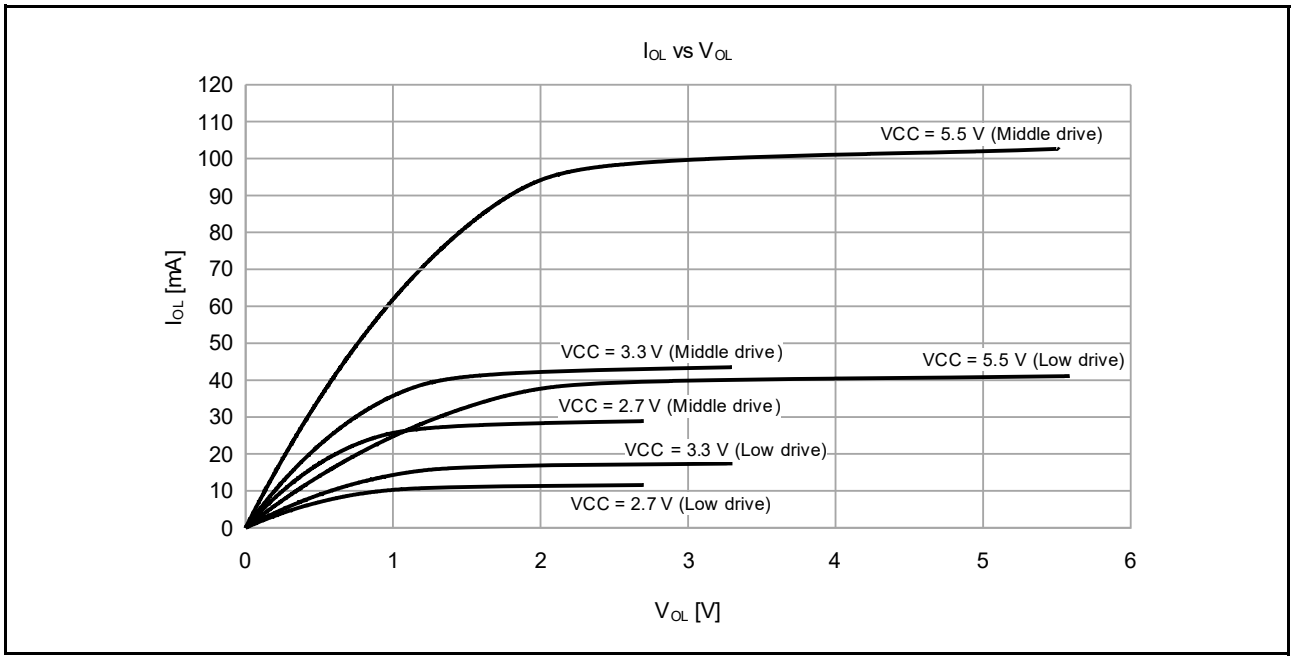

Figure 2.16 **V_{OH}/V_{OL} and I_{OH}/I_{OL} voltage characteristics at Ta = 25°C**

2.2.9 Operating and Standby Current

Table 2.11 Operating and standby current (1) (1 of 2)
Conditions: VCC = AVCC0 = 1.6 to 5.5 V

Parameter					Symbol	Typ*10	Max	Unit	Test conditions
Supply current*1	High-speed mode*2	Normal mode	All peripheral clocks disabled, while (1) code executing from flash*5	ICLK = 48 MHz	I_{CC}	9.3	-	mA	*7
				ICLK = 32 MHz		6.7	-		
				ICLK = 16 MHz		4.1	-		
				ICLK = 8 MHz		2.7	-		
			All peripheral clocks disabled, CoreMark code executing from flash*5	ICLK = 48 MHz		18.8	-		
				ICLK = 32 MHz		13.1	-		
				ICLK = 16 MHz		7.5	-		
				ICLK = 8 MHz		4.7	-		
			All peripheral clocks enabled, while (1) code executing from flash*5	ICLK = 48 MHz		22.4	-		*9
				ICLK = 32 MHz		16.9	-		*8
				ICLK = 16 MHz		9.4	-		
				ICLK = 8 MHz		5.5	-		
			All peripheral clocks enabled, code executing from SRAM*5	ICLK = 48 MHz		-	62.0		*9
		Sleep mode	All peripheral clocks disabled*5	ICLK = 48 MHz		4.0	-		*7
				ICLK = 32 MHz		3.1	-		
				ICLK = 16 MHz		2.3	-		
				ICLK = 8 MHz		1.8	-		
			All peripheral clocks enabled*5	ICLK = 48 MHz		16.8	-		*9
				ICLK = 32 MHz		13.0	-		*8
				ICLK = 16 MHz		7.4	-		
				ICLK = 8 MHz		4.5	-		
		Increase during BGO operation*6				2.5	-		-
	Middle-speed mode*2	Normal mode	All peripheral clocks disabled, while (1) code executing from flash*5	ICLK = 12 MHz	I_{CC}	2.8	-	mA	*7
				ICLK = 8 MHz		2.3	-		
				ICLK = 1 MHz		1.1	-		
			All peripheral clocks disabled, CoreMark code executing from flash*5	ICLK = 12 MHz		5.4	-		
				ICLK = 8 MHz		4.2	-		
				ICLK = 1 MHz		1.4	-		
			All peripheral clocks enabled, while (1) code executing from flash*5	ICLK = 12 MHz		6.9	-		*8
				ICLK = 8 MHz		5.1	-		
				ICLK = 1 MHz		1.7	-		
			All peripheral clocks enabled, code executing from SRAM*5	ICLK = 12 MHz		-	25.0		
		Sleep mode	All peripheral clocks disabled*5	ICLK = 12 MHz		1.5	-		*7
				ICLK = 8 MHz		1.4	-		
				ICLK = 1 MHz		1.0	-		
			All peripheral clocks enabled*5	ICLK = 12 MHz		5.4	-		*8
				ICLK = 8 MHz		4.1	-		
				ICLK = 1 MHz		1.6	-		
		Increase during BGO operation*6				2.5	-		-

Table 2.11 Operating and standby current (1) (2 of 2)
Conditions: VCC = AVCC0 = 1.6 to 5.5 V

Parameter					Symbol	Typ*10	Max	Unit	Test conditions
Supply current*1	Low-speed mode*3	Normal mode	All peripheral clocks disabled, while (1) code executing from flash*5	ICLK = 1 MHz	I_{CC}	0.4	-	mA	*7
			All peripheral clocks disabled, CoreMark code executing from flash*5	ICLK = 1 MHz		0.6	-		
			All peripheral clocks enabled, while (1) code executing from flash*5	ICLK = 1 MHz		1.1	-		*8
			All peripheral clocks enabled, code executing from SRAM*5	ICLK = 1 MHz		-	2.6		
		Sleep mode	All peripheral clocks disabled*5	ICLK = 1 MHz		0.3	-		*7
			All peripheral clocks enabled*5	ICLK = 1 MHz		1.0	-		*8
	Low-voltage mode*3	Normal mode	All peripheral clocks disabled, while (1) code executing from flash*5	ICLK = 4 MHz	I_{CC}	2.2	-	mA	*7
			All peripheral clocks disabled, CoreMark code executing from flash*5	ICLK = 4 MHz		3.3	-		
			All peripheral clocks enabled, while (1) code executing from flash*5	ICLK = 4 MHz		3.7	-		*8
			All peripheral clocks enabled, code executing from SRAM*5	ICLK = 4 MHz		-	10.0		
		Sleep mode	All peripheral clocks disabled*5	ICLK = 4 MHz		1.7	-		*7
			All peripheral clocks enabled*5	ICLK = 4 MHz		3.2	-		*8
	Subosc-speed mode*4	Normal mode	All peripheral clocks disabled, while (1) code executing from flash*5	ICLK = 32.768 kHz	I_{CC}	10.0	-	μA	*8
			All peripheral clocks enabled, while (1) code executing from flash*5	ICLK = 32.768 kHz		17.9	-		
			All peripheral clocks enabled, code executing from SRAM*5	ICLK = 32.768 kHz		-	154.0		
		Sleep mode	All peripheral clocks disabled*5	ICLK = 32.768 kHz		6.3	-		
			All peripheral clocks enabled*5	ICLK = 32.768 kHz		14.0	-		

Note 1. Supply current values do not include output charge/discharge current from all pins. The values apply when internal pull-up MOSs are in the off state.
Note 2. The clock source is HOCO.
Note 3. The clock source is MOCO.
Note 4. The clock source is the sub-clock oscillator.
Note 5. This does not include BGO operation.
Note 6. This is the increase for programming or erasure of the flash memory for data storage during program execution.
Note 7. FCLK, BCLK, PCLKA, PCLKB, PCLKC, and PCLKD are set to divided by 64.
Note 8. FCLK, BCLK, PCLKA, PCLKB, PCLKC, and PCLKD are the same frequency as that of ICLK.
Note 9. FCLK, BCLK, and PCLKB are set to divided by 2 and PCLKA, PCLKC, and PCLKD are the same frequency as that of ICLK.
Note 10. VCC = 3.3 V.

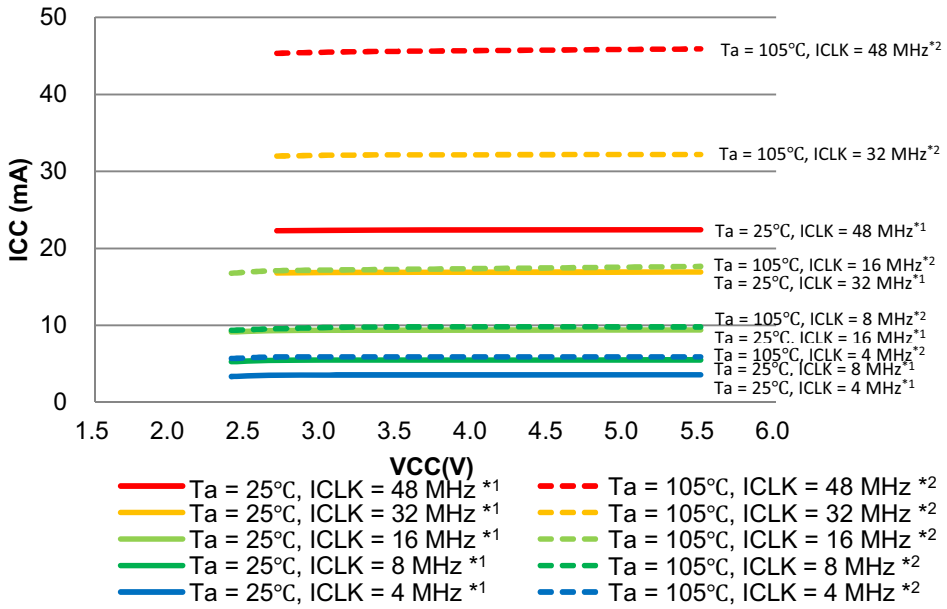

Note 1. All peripheral operations except any BGO operation are operating normally. This is the average of the actual measurements of the sample cores during product evaluation.
Note 2. All peripheral operations except any BGO operation are operating at maximum. This is the average of the actual measurements for the upper-limit samples during product evaluation.

Figure 2.17 Voltage dependency in high-speed mode (reference data)

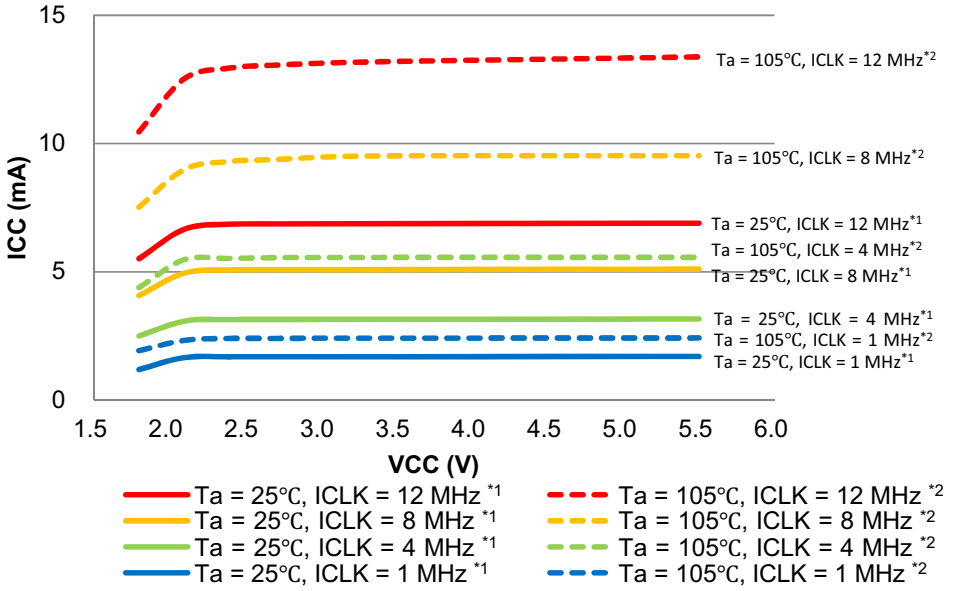

Note 1. All peripheral operations except any BGO operation are operating normally. This is the average of the actual measurements of the sample cores during product evaluation.
Note 2. All peripheral operations except any BGO operation are operating at maximum. This is the average of the actual measurements for the upper-limit samples during product evaluation.

Figure 2.18 Voltage dependency in middle-speed mode (reference data)

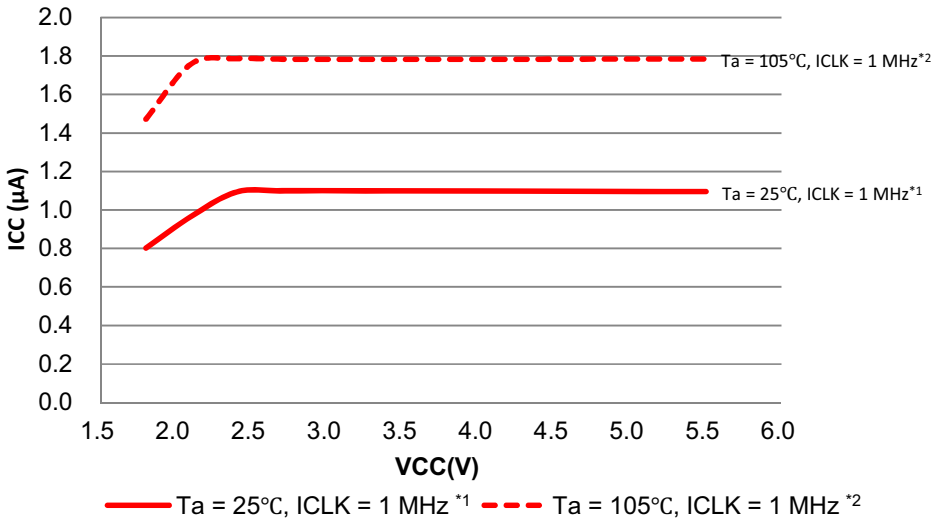

Note 1. All peripheral operations except any BGO operation are operating normally. This is the average of the actual measurements of the sample cores during product evaluation.
Note 2. All peripheral operations except any BGO operation are operating at maximum. This is the average of the actual measurements for the upper-limit samples during product evaluation.

Figure 2.19 Voltage dependency in low-speed mode (reference data)

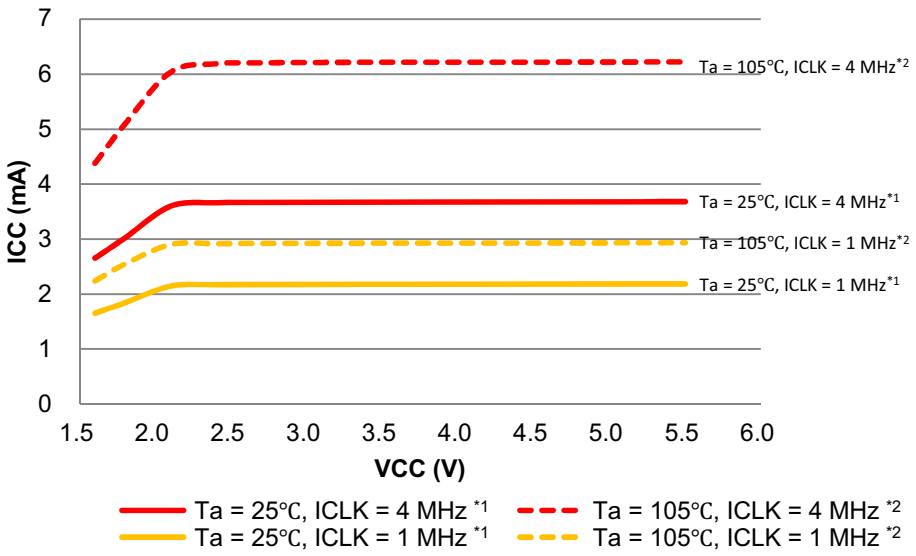

Note 1. All peripheral operations except any BGO operation are operating normally. This is the average of the actual measurements of the sample cores during product evaluation.
Note 2. All peripheral operations except any BGO operation are operating at maximum. This is the average of the actual measurements for the upper-limit samples during product evaluation.

Figure 2.20 Voltage dependency in low-voltage mode (reference data)

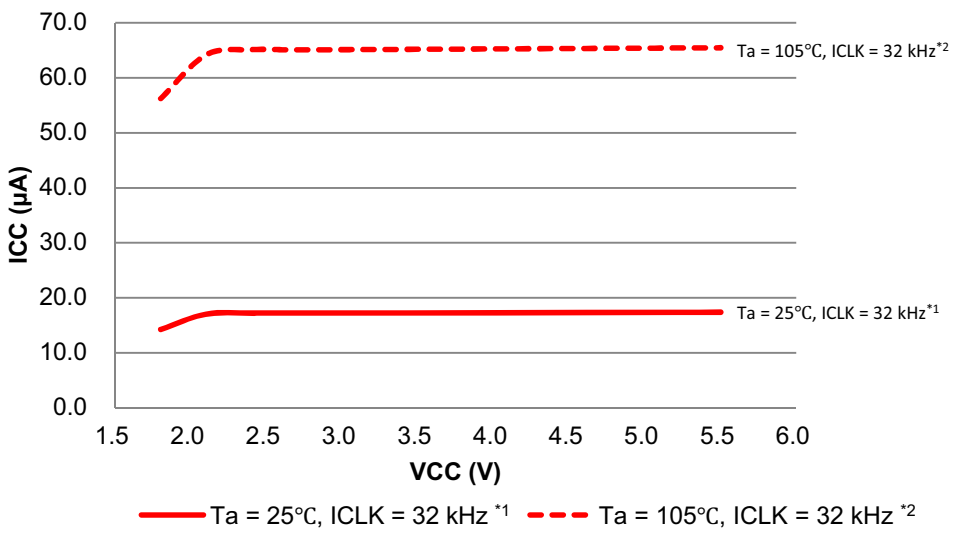

Note 1. All peripheral operations except any BGO operation are operating normally. This is the average of the actual measurements of the sample cores during product evaluation.
Note 2. All peripheral operations except any BGO operation are operating at maximum. This is the average of the actual measurements for the upper-limit samples during product evaluation.

Figure 2.21 Voltage dependency in Subosc-speed mode (reference data)

Table 2.12 Operating and standby current (2)

Conditions: VCC = AVCC0 = 1.6 to 5.5 V

Parameter			Symbol	Typ*4	Max	Unit	Test conditions
Supply current*1	Software Standby mode*2	T_a = 25°C	I_{CC}	0.9	5.5	μA	PSMCR.PSMC[1:0] = 01b (48-KB SRAM on)
		T_a = 55°C		1.6	10.5		
		T_a = 85°C		4.5	25.4		
		T_a = 105°C		12.0	64.7		
		T_a = 25°C		1.1	7.0		PSMCR.PSMC[1:0] = 00b (All SRAM on)
		T_a = 55°C		2.0	14.6		
		T_a = 85°C		6.6	36.2		
		T_a = 105°C		17.6	96.3		
	Increment for RTC operation with low-speed on-chip oscillator*3			0.5	-		-
	Increment for RTC operation with sub-clock oscillator*3			0.4	-		SOMCR.SODRV[1:0] are 11b (Low power mode 3)
				1.2	-		SOMCR.SODRV[1:0] are 00b (Normal mode)

Note 1. Supply current values do not include output charge/discharge current from all pins. The values apply when internal pull-up MOSs are in the off state.
Note 2. The IWDT and LVD are not operating.
Note 3. Includes the current of sub-oscillation circuit or low-speed on-chip oscillator.
Note 4. VCC = 3.3 V.

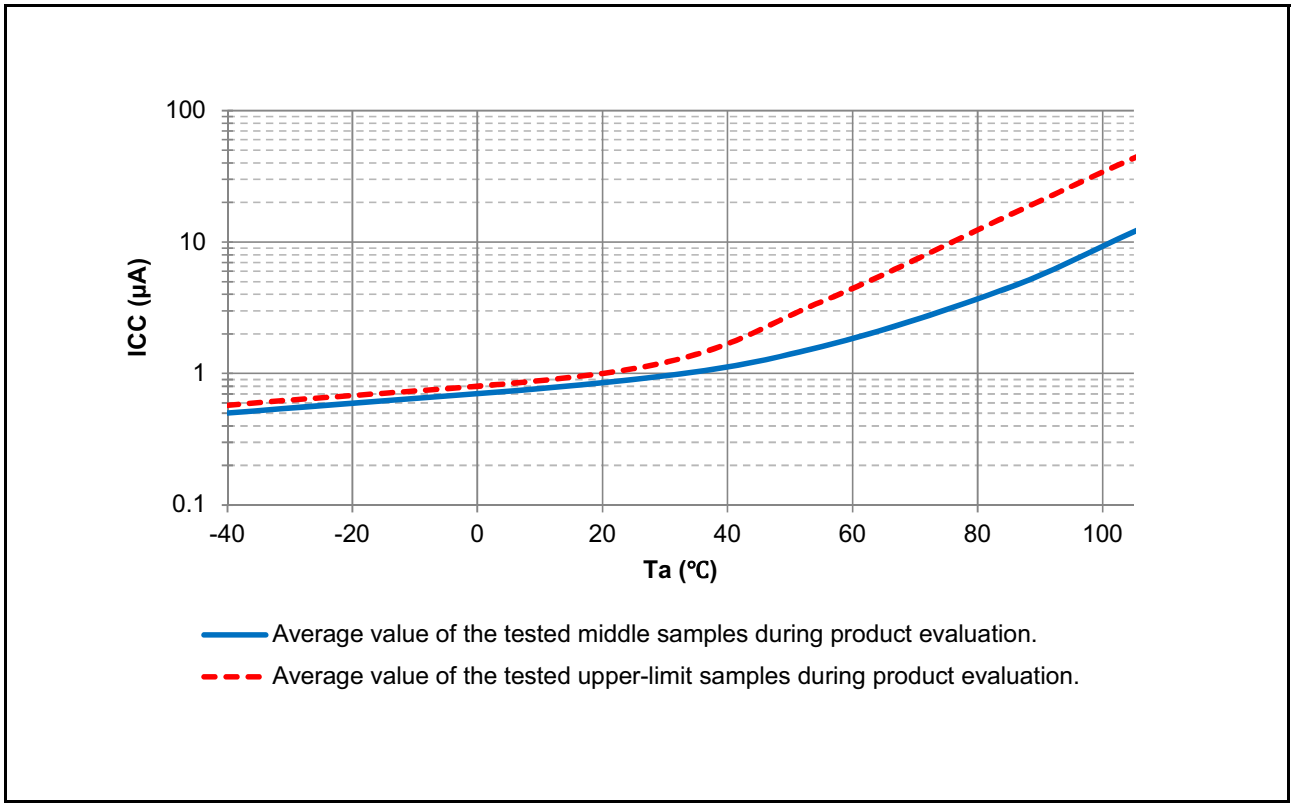

Figure 2.22 Temperature dependency in Software Standby mode 48-KB SRAM on (reference data)

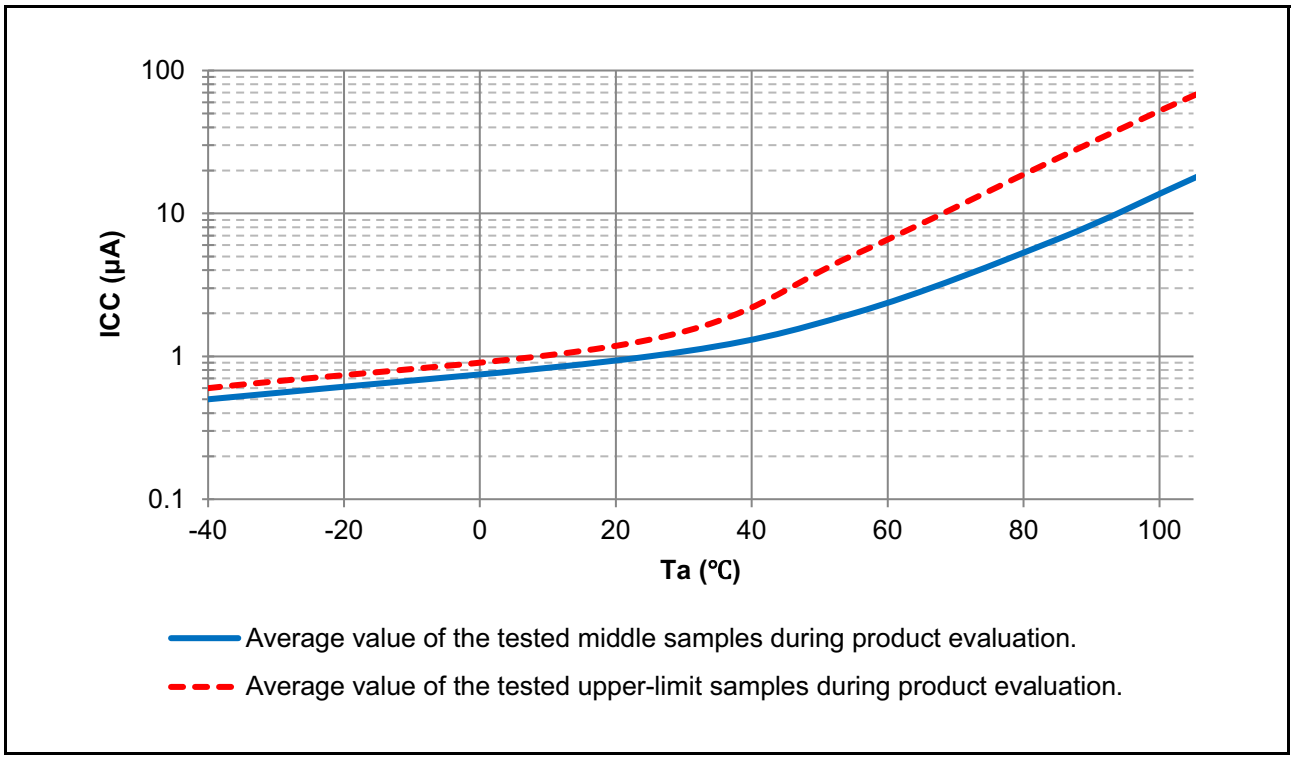

Figure 2.23 Temperature dependency in Software Standby mode all SRAM on (reference data)

Table 2.13 Operating and standby current (3)

Conditions: VCC = AVCC0 = 0 V, VBATT = 1.6 to 3.6 V, VSS = AVSS0 = 0 V

Parameter			Symbol	Typ	Max	Unit	Test conditions
Supply current*1	RTC operation when VCC is off	T_a = 25°C	I_{CC}	0.8	-	μA	VBATT = 2.0 V SOMCR.SORDRV[1:0] = 11b (Low power mode 3)
		T_a = 55°C		0.9	-		
		T_a = 85°C		1.1	-		
		T_a = 105°C		1.2	-		
		T_a = 25°C		0.9	-		VBATT = 3.3 V SOMCR.SORDRV[1:0] = 11b (Low power mode 3)
		T_a = 55°C		1.0	-		
		T_a = 85°C		1.2	-		
		T_a = 105°C		1.3	-		
		T_a = 25°C		1.6	-		VBATT = 2.0 V SOMCR.SORDRV[1:0] = 00b (Normal mode)
		T_a = 55°C		1.8	-		
		T_a = 85°C		2.1	-		
		T_a = 105°C		2.3	-		
		T_a = 25°C		1.7	-		VBATT = 3.3 V SOMCR.SORDRV[1:0] = 00b (Normal mode)
		T_a = 55°C		1.9	-		
		T_a = 85°C		2.2	-		
		T_a = 105°C		2.4	-		

Note 1. Supply current values do not include output charge/discharge current from all pins. The values apply when internal pull-up MOSs are in the off state.

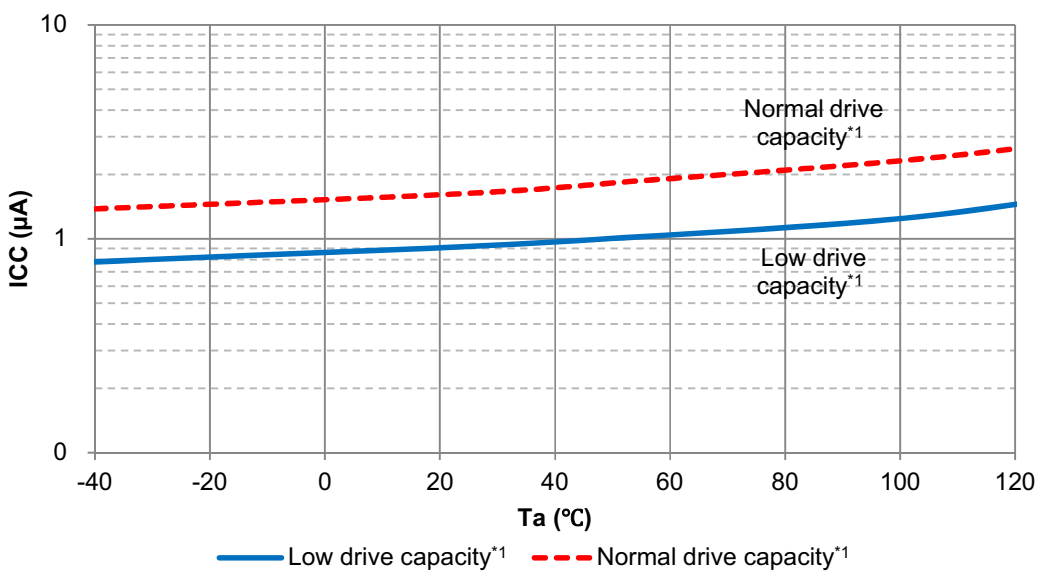

Note 1. Average value of the tested middle sample during product evaluation.

Figure 2.24 Temperature dependency of RTC operation with VCC off (reference data)

Table 2.14 Operating and standby current (4)

Conditions: VCC = AVCC0 = 1.6 to 5.5 V, VREFH0 = 2.7 V to AVCC0

Parameter			Symbol	Min	Typ	Max	Unit	Test conditions
Analog power supply current	During A/D conversion (at high-speed conversion)		I_{AVCC}	-	-	3.0	mA	-
	During A/D conversion (at low power conversion)			-	-	1.0	mA	-
	During D/A conversion (per channel)*1			-	0.4	0.8	mA	-
	Waiting for A/D and D/A conversion (all units)*6			-	-	1.0	μA	-
Reference power supply current	During A/D conversion		I_{REFH0}	-	-	150	μA	-
	Waiting for A/D conversion (all units)			-	-	60	nA	-
	During D/A conversion		I_{REFH}	-	50	100	μA	-
	Waiting for D/A conversion (all units)			-	-	100	μA	-
Temperature sensor			I_{TNS}	-	75	-	μA	-
Low-Power Analog Comparator operating current	Window mode		I_{CMPLP}	-	15	-	μA	-
	Comparator High-speed mode			-	10	-	μA	-
	Comparator Low-speed mode			-	2	-	μA	-
	Comparator Low-speed mode using DAC8			-	820	-	μA	-
Operational Amplifier operating current	Low power mode	1 unit operating	I_{AMP}	-	2.5	4.0	μA	-
		2 units operating		-	4.5	8.0	μA	-
		3 units operating		-	6.5	11.0	μA	-
		4 units operating		-	8.5	14.0	μA	-
	High speed mode	1 unit operating		-	140	220	μA	-
		2 units operating		-	280	410	μA	-
		3 units operating		-	420	600	μA	-
		4 units operating		-	560	780	μA	-
LCD operating current	External resistance division method $f_{LCD} = f_{SUB}$ = 128 Hz, 1/3 bias, and 4-time slice		I_{LCD1}*5	-	0.34	-	μA	-
	Internal voltage boosting method (VLCD.VLCD = 04) $f_{LCD} = f_{SUB}$ = 128 Hz, 1/3 bias, and 4-time slice		I_{LCD2}*5	-	0.92	-	μA	-
	Capacitor split method $f_{LCD} = f_{SUB}$ = 128 Hz, 1/3 bias, and 4-time slice		I_{LCD3}*5	-	0.19	-	μA	-
USB operating current	During USB communication operation under the following settings and conditions: • Host controller operation is set to full-speed mode Bulk OUT transfer (64 bytes) × 1, bulk IN transfer (64 bytes) × 1 • Connect peripheral devices via a 1-meter USB cable from the USB port.		I_{USBH}*2	-	4.3 (VCC) 0.9 (VCC_USB)*4	-	mA	-
	During USB communication operation under the following settings and conditions: • Device controller operation is set to full-speed mode Bulk OUT transfer (64 bytes) × 1, bulk IN transfer (64 bytes) × 1 • Connect the host device via a 1-meter USB cable from the USB port.		I_{USBF}*2	-	3.6 (VCC) 1.1 (VCC_USB)*4	-	mA	-
	During suspended state under the following setting and conditions: • Device controller operation is set to full-speed mode (pull up the USB_DP pin) • Software standby mode • Connect the host device via a 1-meter USB cable from the USB port.		I_{SUSP}*3	-	0.35 (VCC) 170 (VCC_USB)*4	-	μA	-

Note 1. The reference power supply current is included in the power supply current value for D/A conversion.
Note 2. Current consumed only by the USBFS.
Note 3. Includes the current supplied from the pull-up resistor of the USB_DP pin to the pull-down resistor of the host device, in addition to the current consumed by the MCU during the suspended state.
Note 4. When VCC = VCC_USB = 3.3 V.
Note 5. Current flowing only to the LCD controller. Not including the current that flows through the LCD panel.
Note 6. When the MCU is in Software Standby mode or the MSTPCRD.MSTPD16 (ADC140 Module Stop bit) is in the module-stop state.

2.2.10 VCC Rise and Fall Gradient and Ripple Frequency

Table 2.15 Rise and fall gradient characteristics

Conditions: VCC = AVCC0 = 0 to 5.5 V

Parameter		Symbol	Min	Typ	Max	Unit	Test conditions
Power-on VCC rising gradient	Voltage monitor 0 reset disabled at startup (normal startup)	SrVCC	0.02	-	2	ms/V	-
	Voltage monitor 0 reset enabled at startup*1		0.02	-	-		
	SCI/USB Boot mode*2		0.02	-	2		

Note 1. When OFS1.LVDAS = 0.

Note 2. At boot mode, the reset from voltage monitor 0 is disabled regardless of the value of the OFS1.LVDAS bit.

Table 2.16 Rising and falling gradient and ripple frequency characteristics

Conditions: VCC = AVCC0 = VCC_USB = 1.6 to 5.5 V

The ripple voltage must meet the allowable ripple frequency $f_{r(VCC)}$ within the range between the VCC upper limit (5.5 V) and lower limit (1.6 V).

When VCC change exceeds VCC ± 10%, the allowable voltage change rising/falling gradient dt/dVCC must be met.

Parameter	Symbol	Min	Typ	Max	Unit	Test conditions
Allowable ripple frequency	$f_{r(VCC)}$	-	-	10	kHz	Figure 2.25 $V_{r(VCC)} \leq VCC \times 0.2$
		-	-	1	MHz	Figure 2.25 $V_{r(VCC)} \leq VCC \times 0.08$
		-	-	10	MHz	Figure 2.25 $V_{r(VCC)} \leq VCC \times 0.06$
Allowable voltage change rising and falling gradient	dt/dVCC	1.0	-	-	ms/V	When VCC change exceeds VCC ± 10%

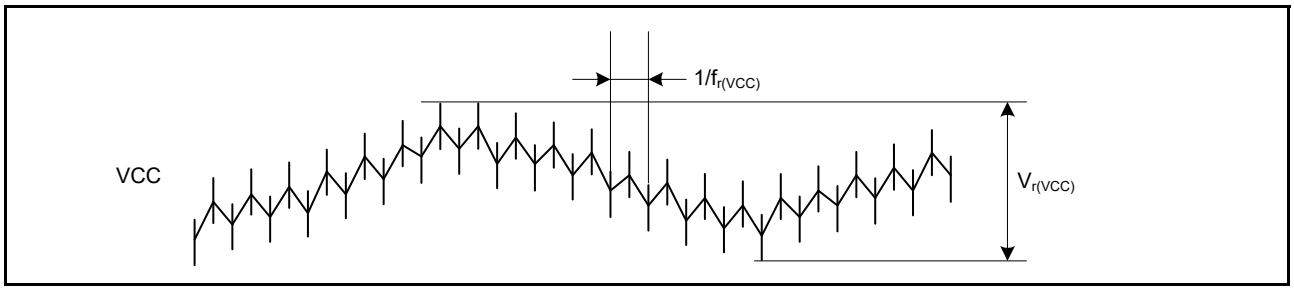

Figure 2.25 Ripple waveform

2.3 AC Characteristics

2.3.1 Frequency

Table 2.17 Operation frequency value in high-speed operating mode

Conditions: VCC = AVCC0 = 2.4 to 5.5 V

Parameter			Symbol	Min	Typ	Max*5	Unit
Operation frequency	System clock (ICLK)*4	2.7 to 5.5 V	f	0.032768	-	48	MHz
		2.4 to 2.7 V		0.032768	-	16	
	FlashIF clock (FCLK)*1, *2, *4	2.7 to 5.5 V		0.032768	-	32	
		2.4 to 2.7 V		0.032768	-	16	
	Peripheral module clock (PCLKA)*4	2.7 to 5.5 V		-	-	48	
		2.4 to 2.7 V		-	-	16	
	Peripheral module clock (PCLKB)*4	2.7 to 5.5 V		-	-	32	
		2.4 to 2.7 V		-	-	16	
	Peripheral module clock (PCLKC)*3, *4	2.7 to 5.5 V		-	-	64	
		2.4 to 2.7 V		-	-	16	
	Peripheral module clock (PCLKD)*4	2.7 to 5.5 V		-	-	64	
		2.4 to 2.7 V		-	-	16	
	External bus clock (BCLK)*4	2.7 to 5.5 V		-	-	24	
		2.4 to 2.7 V		-	-	16	
	EBCLK pin output	2.7 to 5.5 V		-	-	12	
		2.4 to 2.7 V		-	-	8	

Note 1. The lower-limit frequency of FCLK is 1 MHz while programming or erasing the flash memory. When using FCLK for programming or erasing the flash memory at below 4 MHz, the frequency can be set to 1 MHz, 2 MHz, or 3 MHz. A non-integer frequency such as 1.5 MHz cannot be set.

Note 2. The frequency accuracy of FCLK must be ±3.5% while programming or erasing the flash memory. Confirm the frequency accuracy of the clock source.

Note 3. The lower-limit frequency of PCLKC is 4 MHz at 2.4 V or above and 1 MHz at below 2.4 V when the 14-bit A/D converter is in use.

Note 4. See section 9, Clock Generation Circuit in User's Manual for the relationship of frequencies between ICLK, PCLKA, PCLKB, PCLKC, PCLKD, FCLK, and BCLK.

Note 5. The maximum value of operation frequency does not include the internal oscillator errors. The operation can be guaranteed with the errors of the internal oscillator. For details on the range for guaranteed operation, see Table 2.22, Clock timing in User's Manual.

Table 2.18 Operation frequency value in Middle-speed mode

Conditions: VCC = AVCC0 = 1.8 to 5.5 V

Parameter			Symbol	Min	Typ	Max*5	Unit
Operation frequency	System clock (ICLK)*4	2.7 to 5.5 V	f	0.032768	-	12	MHz
		2.4 to 2.7 V		0.032768	-	12	
		1.8 to 2.4 V		0.032768	-	8	
	FlashIF clock (FCLK)*1, *2, *4	2.7 to 5.5 V		0.032768	-	12	
		2.4 to 2.7 V		0.032768	-	12	
		1.8 to 2.4 V		0.032768	-	8	
	Peripheral module clock (PCLKA)*4	2.7 to 5.5 V		-	-	12	
		2.4 to 2.7 V		-	-	12	
		1.8 to 2.4 V		-	-	8	
	Peripheral module clock (PCLKB)*4	2.7 to 5.5 V		-	-	12	
		2.4 to 2.7 V		-	-	12	
		1.8 to 2.4 V		-	-	8	
	Peripheral module clock (PCLKC)*3, *4	2.7 to 5.5 V		-	-	12	
		2.4 to 2.7 V		-	-	12	
		1.8 to 2.4 V		-	-	8	
	Peripheral module clock (PCLKD)*4	2.7 to 5.5 V		-	-	12	
		2.4 to 2.7 V		-	-	12	
		1.8 to 2.4 V		-	-	8	
	External bus clock (BCLK)*4	2.7 to 5.5 V		-	-	12	
		2.4 to 2.7 V		-	-	12	
		1.8 to 2.4 V		-	-	8	
	EBCLK pin output	2.7 to 3.6 V		-	-	12	
		2.4 to 2.7 V		-	-	8	
		1.8 to 2.4 V		-	-	8	

Note 1. The lower-limit frequency of FCLK is 1 MHz while programming or erasing the flash memory. When using FCLK for programming or erasing the flash memory at below 4 MHz, the frequency can be set to 1 MHz, 2 MHz, or 3 MHz. A non-integer frequency such as 1.5 MHz cannot be set.

Note 2. The frequency accuracy of FCLK must be ±3.5% while programming or erasing the flash memory. Confirm the frequency accuracy of the clock source.

Note 3. The lower-limit frequency of PCLKC is 4 MHz at 2.4 V or above and 1 MHz at below 2.4 V when the 14-bit A/D converter is in use.

Note 4. See section 9, Clock Generation Circuit in User's Manual for the relationship of frequencies between ICLK, PCLKA, PCLKB, PCLKC, PCLKD, FCLK, and BCLK.

Note 5. The maximum value of operation frequency does not include errors of the internal oscillator. The operation can be guaranteed with errors of the internal oscillator. For details on the range for guaranteed operation, see Table 2.22, Clock timing.

Table 2.19 Operation frequency value in Low-speed mode

Conditions: VCC = AVCC0 = 1.8 to 5.5 V

Parameter			Symbol	Min	Typ	Max*4	Unit
Operation frequency	System clock (ICLK)*3	1.8 to 5.5 V	f	0.032768	-	1	MHz
	FlashIF clock (FCLK)*1, *3	1.8 to 5.5 V		0.032768	-	1	
	Peripheral module clock (PCLKA)*3	1.8 to 5.5 V		-	-	1	
	Peripheral module clock (PCLKB)*3	1.8 to 5.5 V		-	-	1	
	Peripheral module clock (PCLKC)*2, *3	1.8 to 5.5 V		-	-	1	
	Peripheral module clock (PCLKD)*3	1.8 to 5.5 V		-	-	1	
	External bus clock (BCLK)*3	1.8 to 5.5 V		-	-	1	
	EBCLK pin output	1.8 to 5.5 V		-	-	1	

Note 1. The lower-limit frequency of FCLK is 1 MHz while programming or erasing the flash memory.

Note 2. The lower-limit frequency of PCLKC is 1 MHz when the A/D converter is in use.

Note 3. See section 9, Clock Generation Circuit in User's Manual for the relationship of frequencies between ICLK, PCLKA, PCLKB, PCLKC, PCLKD, FCLK, and BCLK.
Note 4. The maximum value of operation frequency does not include the internal oscillator errors. The operation can be guaranteed with the errors of the internal oscillator. For details on the range for guaranteed operation, see Table 2.22, Clock timing.

Table 2.20 Operation frequency value in Low-voltage mode

Conditions: VCC = AVCC0 = 1.6 to 5.5 V

Parameter			Symbol	Min	Typ	Max*5	Unit
Operation frequency	System clock (ICLK)*4	1.6 to 5.5 V	f	0.032768	-	4	MHz
	FlashIF clock (FCLK)*1, *2, *4	1.6 to 5.5 V		0.032768	-	4	
	Peripheral module clock (PCLKA)*4	1.6 to 5.5 V		-	-	4	
	Peripheral module clock (PCLKB)*4	1.6 to 5.5 V		-	-	4	
	Peripheral module clock (PCLKC)*3, *4	1.6 to 5.5 V		-	-	4	
	Peripheral module clock (PCLKD)*4	1.6 to 5.5 V		-	-	4	
	External bus clock (BCLK)*4	1.6 to 5.5 V		-	-	4	
	EBCLK pin output	1.8 to 5.5 V		-	-	4	
		1.6 to 1.8 V		-	-	2	

Note 1. The lower-limit frequency of FCLK is 1 MHz while programming or erasing the flash memory. When using FCLK for programming or erasing the flash memory at below 4 MHz, the frequency can be set to 1 MHz, 2 MHz, or 3 MHz. A non-integer frequency such as 1.5 MHz cannot be set.
Note 2. The frequency accuracy of FCLK must be ±3.5% while programming or erasing the flash memory. Confirm the frequency accuracy of the clock source.
Note 3. The lower-limit frequency of PCLKC is 4 MHz at 2.4 V or above and 1 MHz at below 2.4 V when the 14-bit A/D converter is in use.
Note 4. See section 9, Clock Generation Circuit in User's Manual for the relationship of frequencies between ICLK, PCLKA, PCLKB, PCLKC, PCLKD, FCLK, and BCLK.
Note 5. The maximum value of operation frequency does not include errors of the internal oscillator. The operation can be guaranteed with the errors of the internal oscillator. For details on the range for guaranteed operation, see Table 2.22, Clock timing.

Table 2.21 Operation frequency value in Subosc-speed mode

Conditions: VCC = AVCC0 = 1.8 to 5.5 V

Parameter			Symbol	Min	Typ	Max	Unit
Operation frequency	System clock (ICLK)*3	1.8 to 5.5 V	f	27.8528	32.768	37.6832	kHz
	FlashIF clock (FCLK)*1, *3	1.8 to 5.5 V		27.8528	32.768	37.6832	
	Peripheral module clock (PCLKA)*3	1.8 to 5.5 V		-	-	37.6832	
	Peripheral module clock (PCLKB)*3	1.8 to 5.5 V		-	-	37.6832	
	Peripheral module clock (PCLKC)*2, *3	1.8 to 5.5 V		-	-	37.6832	
	Peripheral module clock (PCLKD)*3	1.8 to 5.5 V		-	-	37.6832	
	External bus clock (BCLK)*3	1.8 to 5.5 V		-	-	37.6832	
	EBCLK pin output	1.8 to 5.5 V		-	-	37.6832	

Note 1. Programming and erasing the flash memory are not possible.
Note 2. The 14-bit A/D converter cannot be used.
Note 3. See section 9, Clock Generation Circuit in User's Manual for the relationship of frequencies between ICLK, PCLKA, PCLKB, PCLKC, PCLKD, FCLK, and BCLK.

2.3.2 Clock Timing

Table 2.22 Clock timing (1 of 2)

Parameter		Symbol	Min	Typ	Max	Unit	Test conditions
EBCLK pin output cycle time	VCC = 2.7 V or above	t_{Bcyc}	83.3	-	-	ns	Figure 2.26
	VCC = 1.8 V or above		125	-	-		
	VCC = 1.6 V or above		500	-	-		
EBCLK pin output high pulse width	VCC = 2.7 V or above	t_{CH}	20	-	-	ns	
	VCC = 1.8 V or above		30	-	-		
	VCC = 1.6 V or above		150	-	-		
EBCLK pin output low pulse width	VCC = 2.7 V or above	t_{CL}	20	-	-	ns	
	VCC = 1.8 V or above		30	-	-		
	VCC = 1.6 V or above		150	-	-		
EBCLK pin output rise time	VCC = 2.7 V or above	t_{Cr}	-	-	15	ns	
	VCC = 2.4 V or above		-	-	25		
	VCC = 1.8 V or above		-	-	30		
	VCC = 1.6 V or above		-	-	50		
EBCLK pin output fall time	VCC = 2.7 V or above	t_{Cf}	-	-	15	ns	
	VCC = 2.4 V or above		-	-	25		
	VCC = 1.8 V or above		-	-	30		
	VCC = 1.6 V or above		-	-	50		
EXTAL external clock input cycle time		t_{Xcyc}	50	-	-	ns	Figure 2.27
EXTAL external clock input high pulse width		t_{XH}	20	-	-	ns	
EXTAL external clock input low pulse width		t_{XL}	20	-	-	ns	
EXTAL external clock rising time		t_{Xr}	-	-	5	ns	
EXTAL external clock falling time		t_{Xf}	-	-	5	ns	
EXTAL external clock input wait time*1		t_{EXWT}	0.3	-	-	μs	-
EXTAL external clock input frequency		f_{EXTAL}	-	-	20	MHz	2.4 ≤ VCC ≤ 5.5
			-	-	8		1.8 ≤ VCC < 2.4
			-	-	1		1.6 ≤ VCC < 1.8
Main clock oscillator oscillation frequency		f_{MAIN}	1	-	20	MHz	2.4 ≤ VCC ≤ 5.5
			1	-	8		1.8 ≤ VCC < 2.4
			1	-	4		1.6 ≤ VCC < 1.8
Main clock oscillation stabilization wait time (crystal)*9		$t_{MAINOSCWT}$	-	-	-*9	ms	-
LOCO clock oscillation frequency		f_{LOCO}	27.8528	32.768	37.6832	kHz	-
LOCO clock oscillation stabilization time		t_{LOCO}	-	-	100	μs	Figure 2.28
IWDT-dedicated clock oscillation frequency		f_{ILOCO}	12.75	15	17.25	kHz	-
MOCO clock oscillation frequency		f_{MOCO}	6.8	8	9.2	MHz	-
MOCO clock oscillation stabilization time		t_{MOCO}	-	-	1	μs	-

Table 2.22 Clock timing (2 of 2)

Parameter		Symbol	Min	Typ	Max	Unit	Test conditions
HOCO clock oscillation frequency		f_{HOCO24}	23.64	24	24.36	MHz	Ta = -40 to -20°C 1.8 ≤ VCC ≤ 5.5
			22.68	24	25.32		Ta = -40 to 85°C 1.6 ≤ VCC < 1.8
			23.76	24	24.24		Ta = -20 to 85°C 1.8 ≤ VCC ≤ 5.5
			23.52	24	24.48		Ta = 85 to 105°C 2.4 ≤ VCC ≤ 5.5
		f_{HOCO32}	31.52	32	32.48		Ta = -40 to -20°C 1.8 ≤ VCC ≤ 5.5
			30.24	32	33.76		Ta = -40 to 85°C 1.6 ≤ VCC < 1.8
			31.68	32	32.32		Ta = -20 to 85°C 1.8 ≤ VCC ≤ 5.5
			31.36	32	32.64		Ta = 85 to 105°C 2.4 ≤ VCC ≤ 5.5
		f_{HOCO48}*4	47.28	48	48.72		Ta = -40 to -20°C 1.8 ≤ VCC ≤ 5.5
			47.52	48	48.48		Ta = -20 to 85°C 1.8 ≤ VCC ≤ 5.5
			47.04	48	48.96		Ta = 85 to 105°C 2.4 ≤ VCC ≤ 5.5
		f_{HOCO64}*5	63.04	64	64.96		Ta = -40 to -20°C 2.4 ≤ VCC ≤ 5.5
			63.36	64	64.64		Ta = -20 to 85°C 2.4 ≤ VCC ≤ 5.5
			62.72	64	65.28		Ta = 85 to 105°C 2.4 ≤ VCC ≤ 5.5
HOCO clock oscillation stabilization time*6, *7	Except Low-voltage mode	t_{HOCO24} t_{HOCO32}	-	-	37.1	μs	Figure 2.29
		t_{HOCO48}	-	-	43.3		
		t_{HOCO64}	-	-	80.6		
	Low-voltage mode	t_{HOCO24} t_{HOCO32} t_{HOCO48} t_{HOCO64}	-	-	100.9		
PLL input frequency*2		f_{PLLIN}	4	-	12.5	MHz	-
PLL circuit oscillation frequency*2		f_{PLL}	24	-	64	MHz	-
PLL clock oscillation stabilization time*8		t_{PLL}	-	-	55.5	μs	Figure 2.31
PLL free-running oscillation frequency		f_{PLLFR}	-	8	-	MHz	-
Sub-clock oscillator oscillation frequency		f_{SUB}	-	32.768	-	kHz	-
Sub-clock oscillation stabilization time*3		t_{SUBOSC}	-	-	-*3	s	Figure 2.32

Note 1. Time until the clock can be used after the Main Clock Oscillator Stop bit (MOSCCR.MOSTP) is set to 0 (operating) when the external clock is stable.
Note 2. The VCC range that the PLL can be used is 2.4 to 5.5 V.
Note 3. After changing the setting of the SOSCCR.SOSTP bit so that the sub-clock oscillator operates, only start using the sub-clock oscillator after the sub-clock oscillation stabilization wait time elapsed. Use the oscillator wait time recommended by the oscillator manufacturer.
Note 4. The 48-MHz HOCO can be used within a VCC range of 1.8 V to 5.5 V.
Note 5. The 64-MHz HOCO can be used within a VCC range of 2.4 V to 5.5 V.
Note 6. This is a characteristic when HOCOCR.HCSTP bit is set to 0 (oscillation) in MOCO stop state.
When HOCOCR.HCSTP bit is set to 0 (oscillation) during MOCO oscillation, this specification is shortened by 1 μs.
Note 7. Whether stabilization time has elapsed can be confirmed by OSCSF.HOCOSF.
Note 8. This is a characteristic when PLLCR.PLLSTP bit is set to 0 (operation) in MOCO stop state.
When PLLCR.PLLSTP bit is set to 0 (operation) during MOCO oscillation, this specification is shortened by 1 μs.
Note 9. When setting up the main clock, ask the oscillator manufacturer for an oscillation evaluation and use the results as the recommended oscillation stabilization time. Set the MOSCWTCR register to a value equal to or greater than the recommended stabilization time. After changing the setting of the MOSCCR.MOSTP bit so that the main clock oscillator operates, read the OSCSF.MOSCSF flag to confirm that it is 1, then start using the main clock.

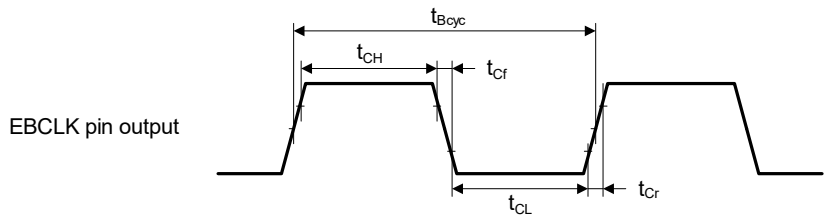

Test conditions: V_{OH} = VCC × 0.7, V_{OL} = VCC × 0.3, I_{OH} = -1.0 mA, I_{OL} = 1.0 mA, C = 30 pF

Figure 2.26 EBCLK pin output timing

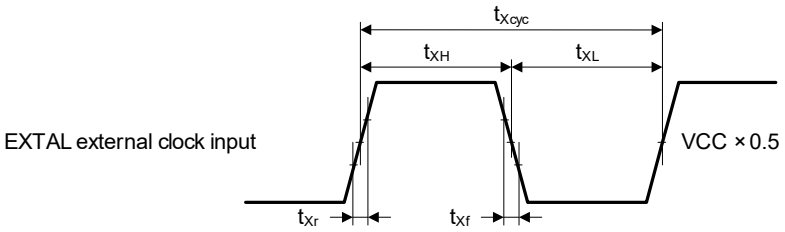

Figure 2.27 EXTAL external clock input timing

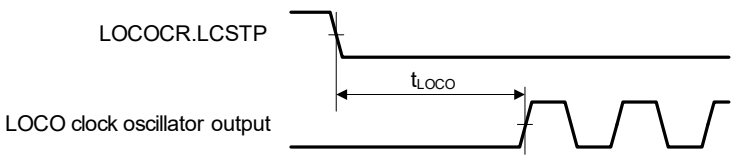

Figure 2.28 LOCO clock oscillation start timing

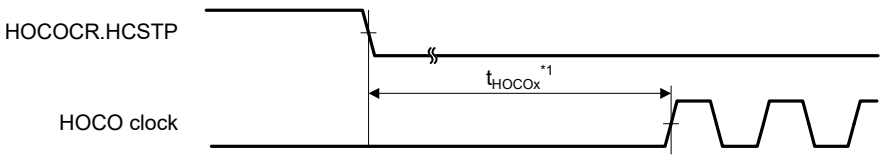

Note 1. x = 24, 32, 48, 64

Figure 2.29 HOCO clock oscillation start timing (started by setting HOCOCR.HCSTP bit)

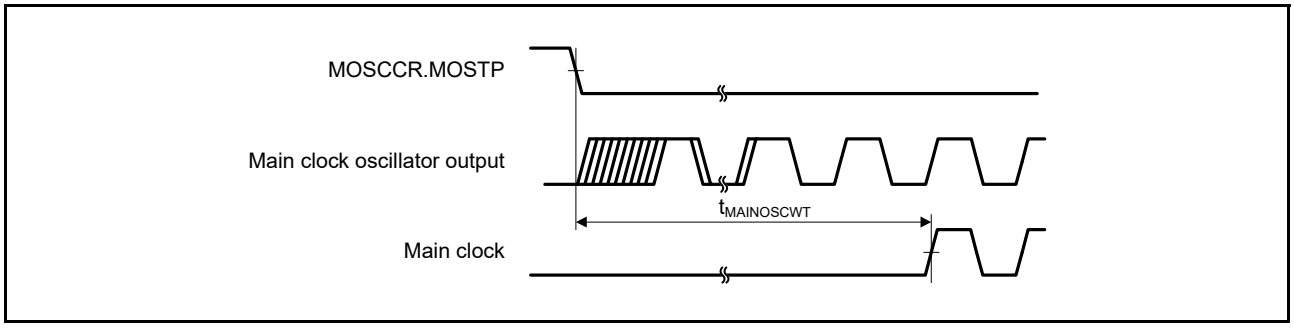

Figure 2.30 Main clock oscillation start timing

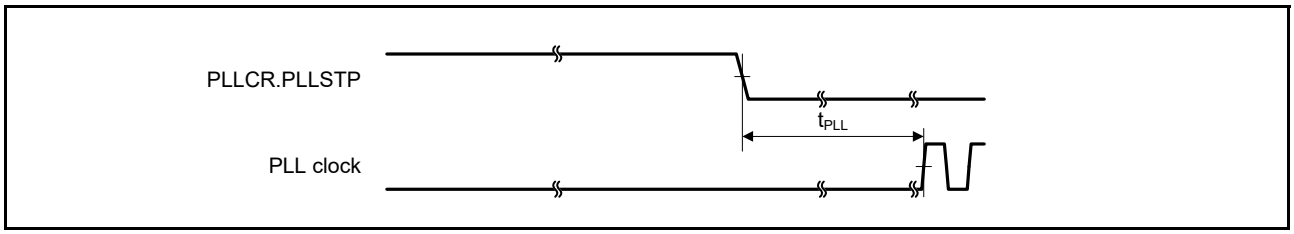

Figure 2.31 PLL clock oscillation start timing (PLL is operated after main clock oscillation has settled)

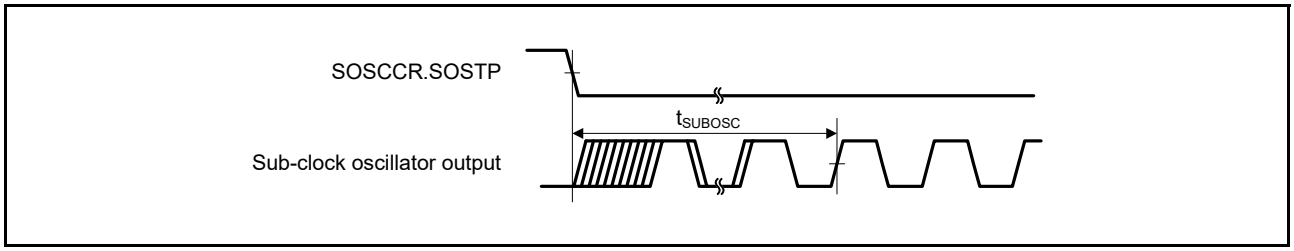

Figure 2.32 Sub-clock oscillation start timing

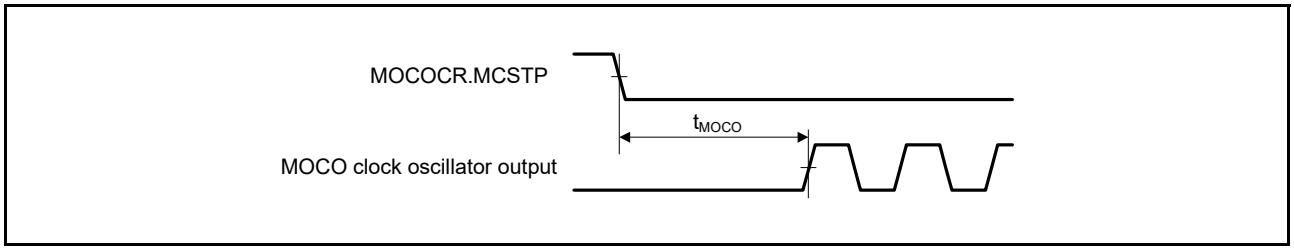

Figure 2.33 MOCO clock oscillation start timing

2.3.3 Reset Timing

Table 2.23 Reset timing

Parameter		Symbol	Min	Typ	Max	Unit	Test conditions
RES pulse width	At power-on	t_{RESWP}	3	-	-	ms	Figure 2.34
	Other than above	t_{RESW}	30	-	-	μs	Figure 2.35
Wait time after RES cancellation (at power-on)	LVD0: enable*1	t_{RESWT}	-	0.7	-	ms	Figure 2.34
	LVD0: disable*2		-	0.3	-		
Wait time after RES cancellation (during powered-on state)	LVD0: enable*1	t_{RESWT2}	-	0.5	-	ms	Figure 2.35
	LVD0: disable*2		-	0.05	-		
Internal reset cancellation time (Watchdog timer reset, SRAM parity error reset, SRAM ECC error reset, Bus master MPU error reset, Bus slave MPU error reset, Stack pointer error reset, Software reset)	LVD0: enable*1	t_{RESWT3}	-	0.6	-	ms	
	LVD0: disable*2		-	0.15	-		

Note 1. When OFS1.LVDAS = 0.
Note 2. When OFS1.LVDAS = 1.

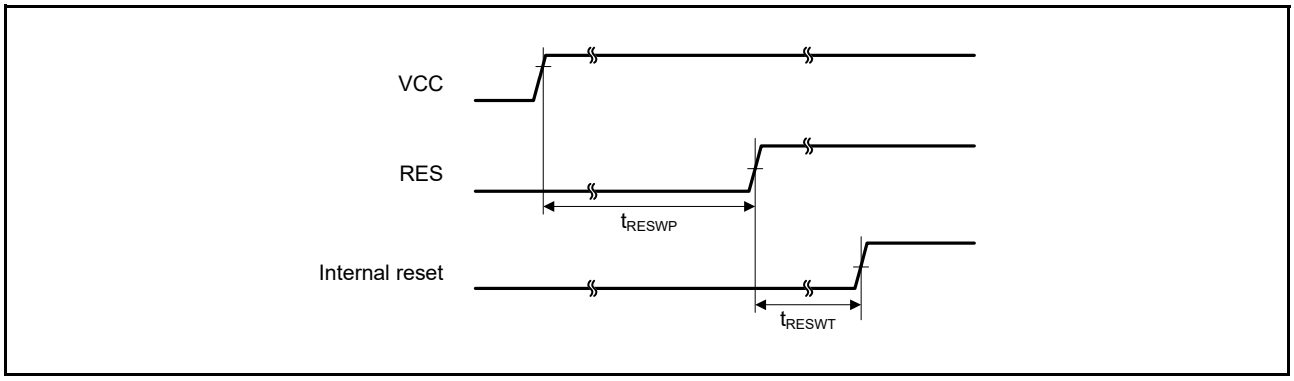

Figure 2.34 Reset input timing at power-on

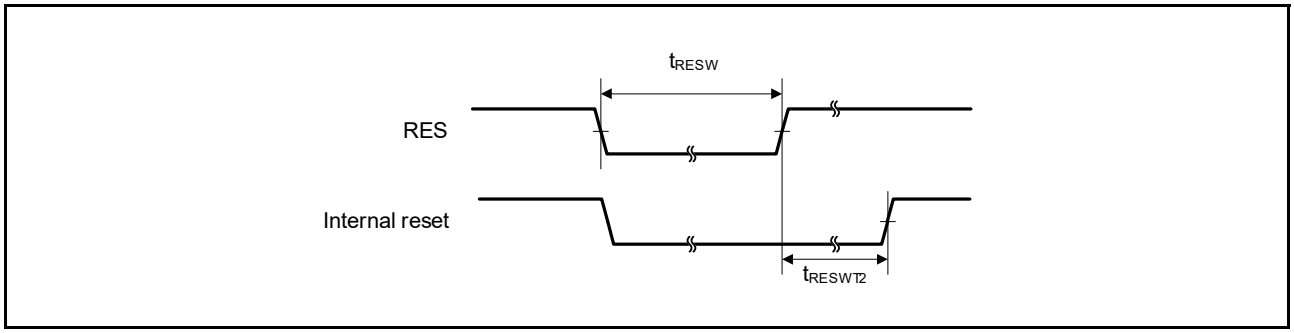

Figure 2.35 Reset input timing (1)

2.3.4 Wakeup Time

Table 2.24 Timing of recovery from low power modes (1)

Parameter				Symbol	Min	Typ	Max	Unit	Test conditions
Recovery time from Software Standby mode*1	High-speed mode	Crystal resonator connected to main clock oscillator	System clock source is main clock oscillator (20 MHz)*2	t_{SBYMC}	-	2	3	ms	Figure 2.36
			System clock source is PLL (48 MHz) with Main clock oscillator*2	t_{SBYPC}	-	2	3	ms	
		External clock input to main clock oscillator	System clock source is main clock oscillator (20 MHz)*3	t_{SBYEX}	-	14	25	μs	
			System clock source is PLL (48 MHz) with Main clock oscillator*3	t_{SBYPE}	-	53	76	μs	
		System clock source is HOCO*4 (HOCO clock is 32 MHz)		t_{SBYHO}	-	43	52	μs	
		System clock source is HOCO*4 (HOCO clock is 48 MHz)		t_{SBYHO}	-	44	52	μs	
		System clock source is HOCO*5 (HOCO clock is 64 MHz)		t_{SBYHO}	-	82	110	μs	
		System clock source is MOCO		t_{SBYMO}	-	16	25	μs	

Note 1. The division ratio of ICK, BCK, FCK, and PCKx is the minimum division ratio within the allowable frequency range. The recovery time is determined by the system clock source.
Note 2. The Main Clock Oscillator Wait Control Register (MOSCWTCR) is set to 05h.
Note 3. The Main Clock Oscillator Wait Control Register (MOSCWTCR) is set to 00h.
Note 4. The HOCO Clock Wait Control Register (HOCOWTCR) is set to 05h.
Note 5. The HOCO Clock Wait Control Register (HOCOWTCR) is set to 06h.

Table 2.25 Timing of recovery from low power modes (2)

Parameter				Symbol	Min	Typ	Max	Unit	Test conditions
Recovery time from Software Standby mode*1	Middle-speed mode	Crystal resonator connected to main clock oscillator	System clock source is main clock oscillator (12 MHz)*2	t_{SBYMC}	-	2	3	ms	Figure 2.36
			System clock source is PLL (24 MHz) with main clock oscillator*2	t_{SBYPC}	-	2	3	ms	
		External clock input to main clock oscillator	System clock source is main clock oscillator (12 MHz)*3	t_{SBYEX}	-	2.9	10	μs	
			System clock source is PLL (24 MHz) with main clock oscillator*3	t_{SBYPE}	-	49	76	μs	
		System clock source is HOCO (24 MHz)		t_{SBYHO}	-	38	50	μs	
		System clock source is MOCO		t_{SBYMO}	-	3.5	5.5	μs	

Note 1. The division ratio of ICK, BCK, FCK, and PCKx is the minimum division ratio within the allowable frequency range. The recovery time is determined by the system clock source.
Note 2. The Main Clock Oscillator Wait Control Register (MOSCWTCR) is set to 05h.
Note 3. The Main Clock Oscillator Wait Control Register (MOSCWTCR) is set to 00h.

Table 2.26 Timing of recovery from low power modes (3)

Parameter				Symbol	Min	Typ	Max	Unit	Test conditions
Recovery time from Software Standby mode*1	Low-speed mode	Crystal resonator connected to main clock oscillator	System clock source is main clock oscillator (1 MHz)*2	t_{SBYMC}	-	2	3	ms	Figure 2.36
		External clock input to main clock oscillator	System clock source is main clock oscillator (1 MHz)*3	t_{SBYEX}	-	28	50	μs	
		System clock source is MOCO		t_{SBYMO}	-	25	35	μs	

Note 1. The division ratio of ICK, BCK, FCK, and PCKx is the minimum division ratio within the allowable frequency range. The recovery time is determined by the system clock source.
Note 2. The Main Clock Oscillator Wait Control Register (MOSCWTCR) is set to 05h.
Note 3. The Main Clock Oscillator Wait Control Register (MOSCWTCR) is set to 00h.

Table 2.27 Timing of recovery from low power modes (4)

Parameter				Symbol	Min	Typ	Max	Unit	Test conditions
Recovery time from Software Standby mode*1	Low-voltage mode	Crystal resonator connected to main clock oscillator	System clock source is main clock oscillator (4 MHz)*2	t_{SBYMC}	-	2	3	ms	Figure 2.36
		External clock input to main clock oscillator	System clock source is main clock oscillator (4 MHz)*3	t_{SBYEX}	-	108	130	μs	
		System clock source is HOCO		t_{SBYHO}	-	108	130	μs	

Note 1. The division ratio of ICK, BCK, FCK, and PCKx is the minimum division ratio within the allowable frequency range. The recovery time is determined by the system clock source. When multiple oscillators are active, the recovery time can be determined by the following expression.
Note 2. The Main Clock Oscillator Wait Control Register (MOSCWTCR) is set to 05h.
Note 3. The Main Clock Oscillator Wait Control Register (MOSCWTCR) is set to 00h.

Table 2.28 Timing of recovery from low power modes (5)

Parameter			Symbol	Min	Typ	Max	Unit	Test conditions
Recovery time from Software Standby mode*1	Subosc-speed mode	System clock source is sub-clock oscillator (32.768 kHz)	t_{SBYSC}	-	0.85	1	ms	Figure 2.36
		System clock source is LOCO (32.768 kHz)	t_{SBYLO}	-	0.85	1.2	ms	

Note 1. The sub-clock oscillator or LOCO itself continues to oscillate in Software Standby mode during Subosc-speed mode.

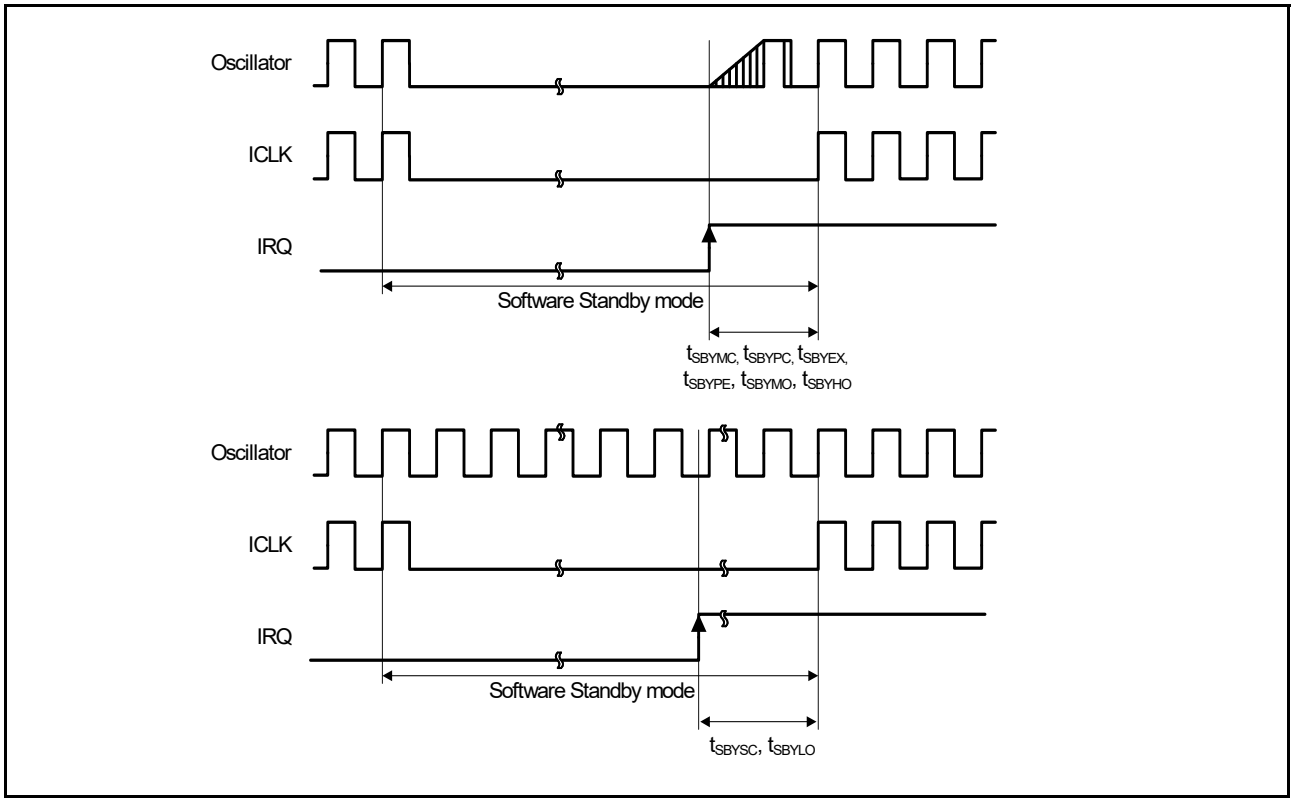

Figure 2.36 Software Standby mode cancellation timing

Table 2.29 Timing of recovery from low power modes (6)

Parameter		Symbol	Min	Typ	Max	Unit	Test conditions
Recovery time from Software Standby mode to Snooze mode	High-speed mode System clock source is HOCO	t_{SNZ}	-	36	45	μs	Figure 2.37
	Middle-speed mode System clock source is MOCO	t_{SNZ}	-	1.3	3.6	μs	
	Low-speed mode System clock source is MOCO	t_{SNZ}	-	10	13	μs	
	Low-voltage mode System clock source is HOCO	t_{SNZ}	-	87	110	μs	

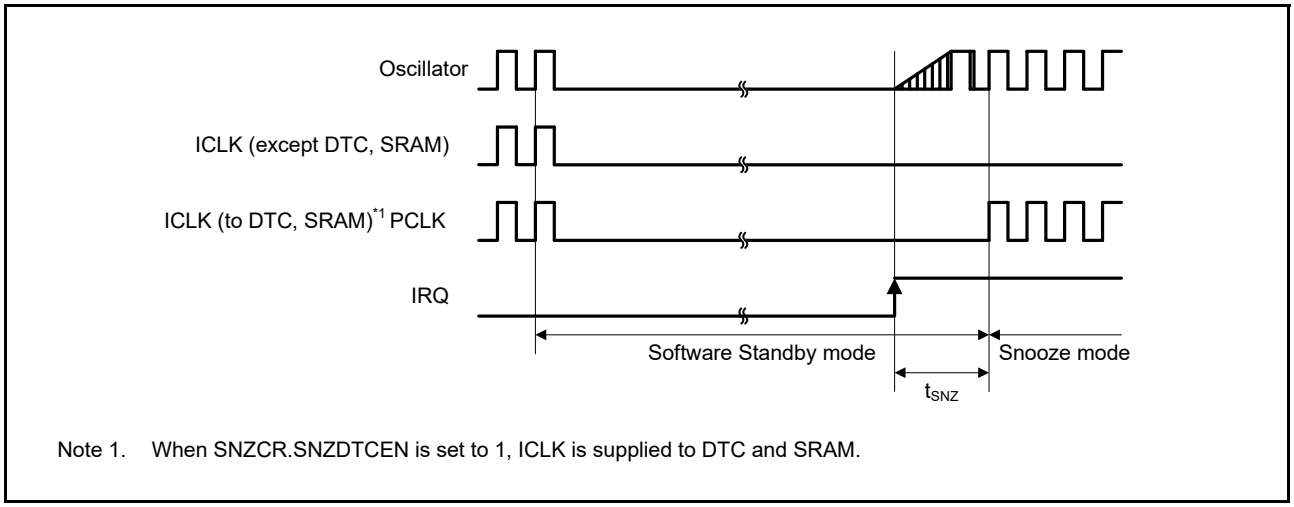

Figure 2.37 Recovery timing from Software Standby mode to Snooze mode

2.3.5 NMI and IRQ Noise Filter

Table 2.30 NMI and IRQ noise filter

Parameter	Symbol	Min	Typ	Max	Unit	Test conditions	
NMI pulse width	t_{NMIW}	200	-	-	ns	NMI digital filter disabled	$t_{Pcyc} \times 2 \leq 200$ ns
		$t_{Pcyc} \times 2$*1	-	-			$t_{Pcyc} \times 2 > 200$ ns
		200	-	-		NMI digital filter enabled	$t_{NMICK} \times 3 \leq 200$ ns
		$t_{NMICK} \times 3.5$*2	-	-			$t_{NMICK} \times 3 > 200$ ns
IRQ pulse width	t_{IRQW}	200	-	-	ns	IRQ digital filter disabled	$t_{Pcyc} \times 2 \leq 200$ ns
		$t_{Pcyc} \times 2$*1	-	-			$t_{Pcyc} \times 2 > 200$ ns
		200	-	-		IRQ digital filter enabled	$t_{IRQCK} \times 3 \leq 200$ ns
		$t_{IRQCK} \times 3.5$*3	-	-			$t_{IRQCK} \times 3 > 200$ ns

Note: 200 ns minimum in Software Standby mode.
Note 1. t_{Pcyc} indicates the cycle of PCLKB.
Note 2. t_{NMICK} indicates the cycle of the NMI digital filter sampling clock.
Note 3. t_{IRQCK} indicates the cycle of the IRQi digital filter sampling clock (i = 0 to 15).

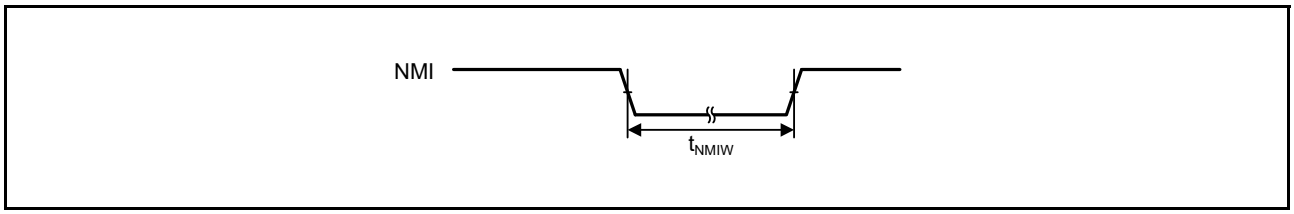

Figure 2.38 NMI interrupt input timing

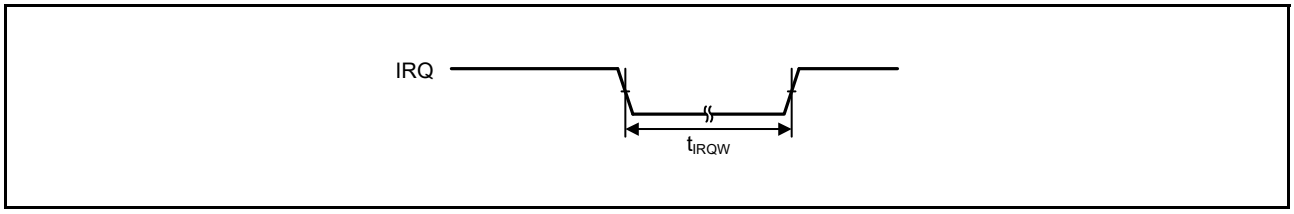

Figure 2.39 IRQ interrupt input timing

2.3.6 Bus Timing

Table 2.31 Bus timing (1)

Conditions: Low drive output is selected in the Port Drive Capability in PmnPFS register
VCC = 2.7 to 5.5 V
Output load conditions: V_{OH} = VCC × 0.5, V_{OL} = VCC × 0.5, C = 30 pF

Parameter	Symbol	Min	Max	Unit	Test conditions
Address delay	t_{AD}	-	55	ns	Figure 2.42 to Figure 2.45
Byte control delay	t_{BCD}	-	55	ns	
CS delay	t_{CSD}	-	55	ns	
ALE delay time	t_{ALED}	-	55	ns	
RD delay	t_{RSD}	-	55	ns	
Read data setup time	t_{RDS}	37	-	ns	
Read data hold time	t_{RDH}	0	-	ns	
WR delay	t_{WRD}	-	55	ns	
Write data delay	t_{WDD}	-	55	ns	
Write data hold time	t_{WDH}	0	-	ns	
WAIT setup time	t_{WTS}	37	-	ns	Figure 2.46
WAIT hold time	t_{WTH}	0	-	ns	

Table 2.32 Bus timing (2)

Conditions: Low drive output is selected in the Port Drive Capability in PmnPFS register
VCC = 2.4 to 2.7 V
Output load conditions: V_{OH} = VCC × 0.5, V_{OL} = VCC × 0.5, C = 30 pF

Parameter	Symbol	Min	Max	Unit	Test conditions
Address delay	t_{AD}	-	55	ns	Figure 2.42 to Figure 2.45
Byte control delay	t_{BCD}	-	55	ns	
CS delay	t_{CSD}	-	55	ns	
ALE delay time	t_{ALED}	-	55	ns	
RD delay	t_{RSD}	-	55	ns	
Read data setup time	t_{RDS}	45	-	ns	
Read data hold time	t_{RDH}	0	-	ns	
WR delay	t_{WRD}	-	55	ns	
Write data delay	t_{WDD}	-	55	ns	
Write data hold time	t_{WDH}	0	-	ns	
WAIT setup time	t_{WTS}	45	-	ns	Figure 2.46
WAIT hold time	t_{WTH}	0	-	ns	

Table 2.33 Bus timing (3)

Conditions: Low drive output is selected in the Port Drive Capability in PmnPFS register
VCC = 1.8 to 2.4 V
Output load conditions: V_{OH} = VCC × 0.5, V_{OL} = VCC × 0.5, C = 30 pF

Parameter	Symbol	Min	Max	Unit	Test conditions
Address delay	t_{AD}	-	90	ns	Figure 2.42 to Figure 2.45
Byte control delay	t_{BCD}	-	90	ns	
CS delay	t_{CSD}	-	90	ns	
ALE delay time	t_{ALED}	-	90	ns	
RD delay	t_{RSD}	-	90	ns	
Read data setup time	t_{RDS}	70	-	ns	
Read data hold time	t_{RDH}	0	-	ns	
WR delay	t_{WRD}	-	90	ns	
Write data delay	t_{WDD}	-	90	ns	
Write data hold time	t_{WDH}	0	-	ns	
WAIT setup time	t_{WTS}	70	-	ns	Figure 2.46
WAIT hold time	t_{WTH}	0	-	ns	

Table 2.34 Bus timing (4)

Conditions: Low drive output is selected in the Port Drive Capability in PmnPFS register
VCC = 1.6 to 1.8 V
Output load conditions: V_{OH} = VCC × 0.5, V_{OL} = VCC × 0.5, C = 30 pF

Parameter	Symbol	Min	Max	Unit	Test conditions
Address delay	t_{AD}	-	120	ns	Figure 2.42 to Figure 2.45
Byte control delay	t_{BCD}	-	120	ns	
CS delay	t_{CSD}	-	120	ns	
ALE delay time	t_{ALED}	-	120	ns	
RD delay	t_{RSD}	-	120	ns	
Read data setup time	t_{RDS}	90	-	ns	
Read data hold time	t_{RDH}	0	-	ns	
WR delay	t_{WRD}	-	120	ns	
Write data delay	t_{WDD}	-	120	ns	
Write data hold time	t_{WDH}	0	-	ns	
WAIT setup time	t_{WTS}	90	-	ns	Figure 2.46
WAIT hold time	t_{WTH}	0	-	ns	

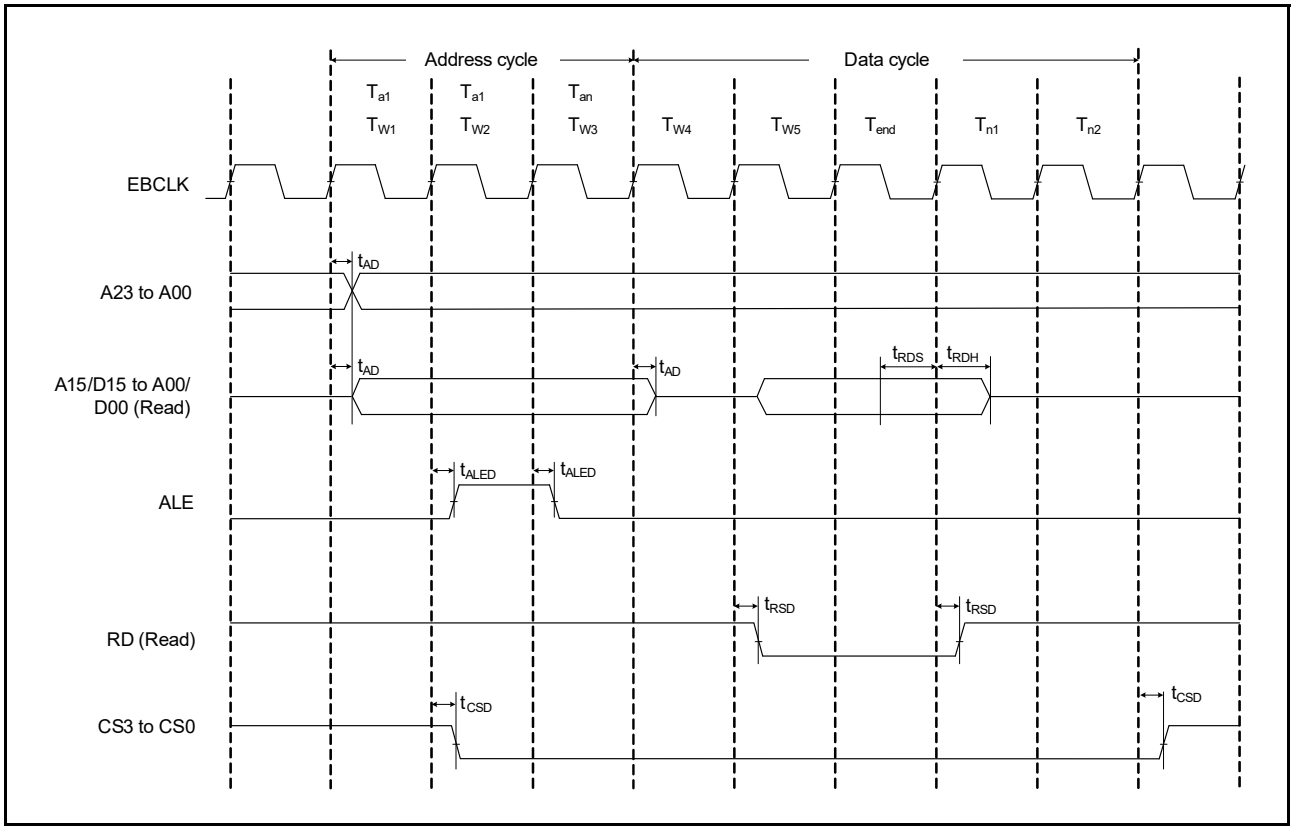

Figure 2.40 Address/data multiplexed bus read access timing

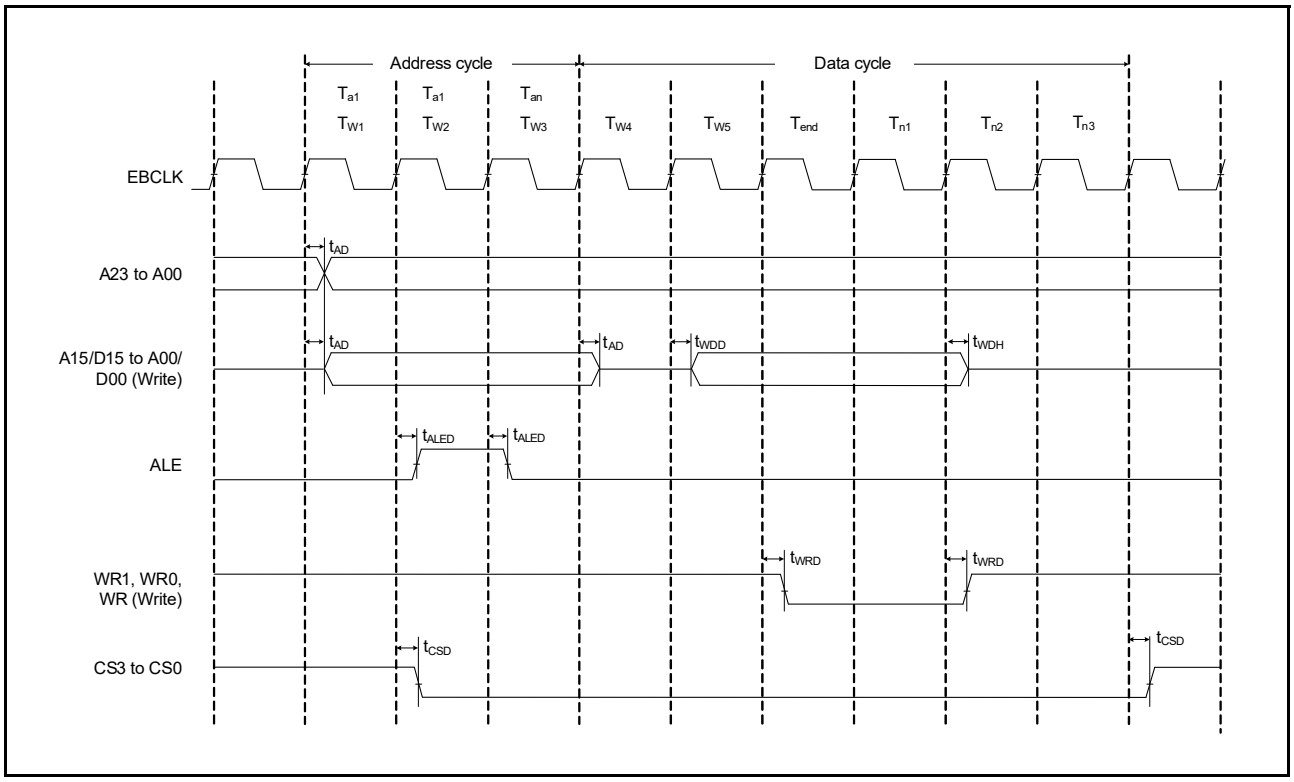

Figure 2.41 Address/data multiplexed bus write access timing

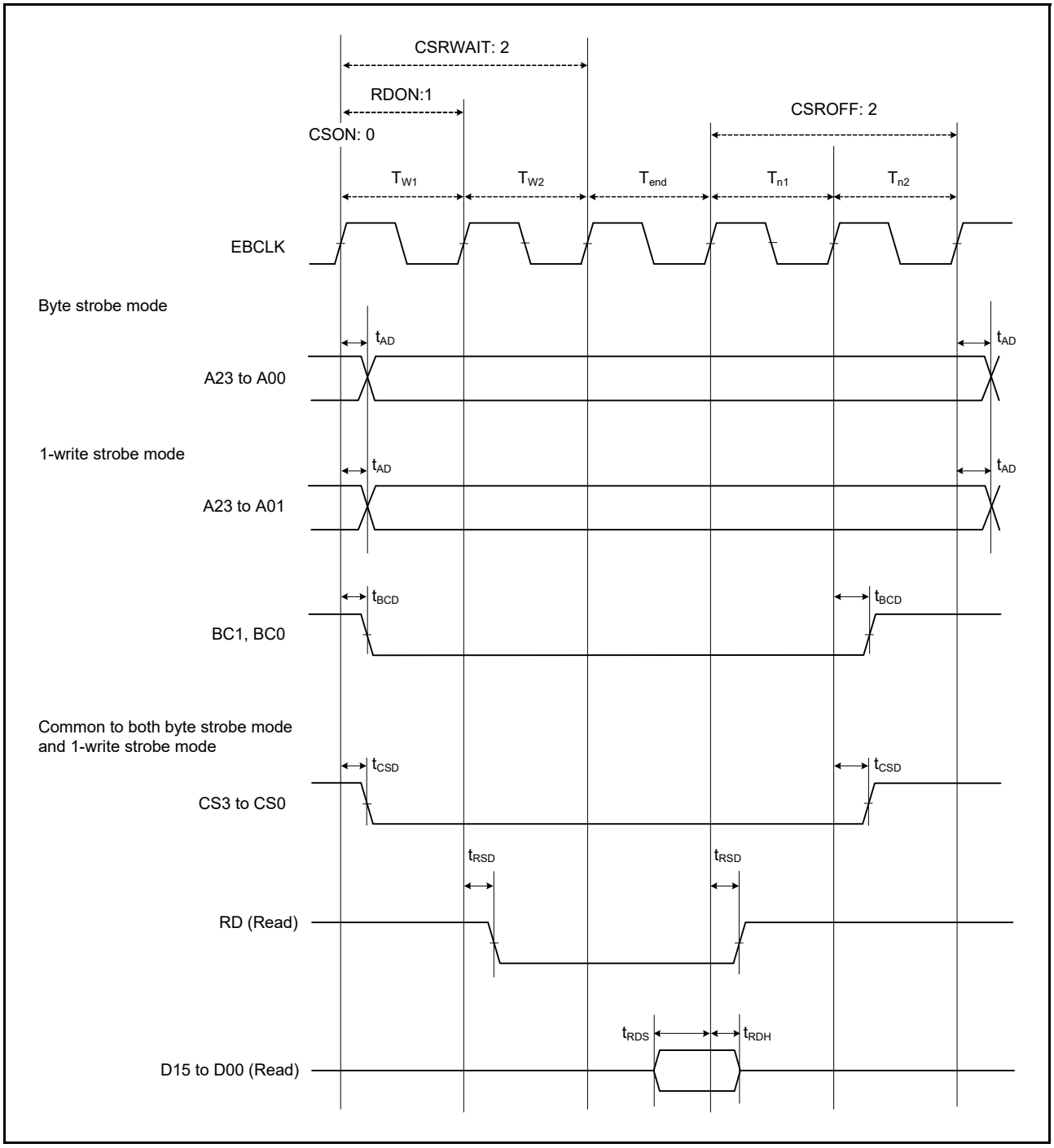

Figure 2.42 External bus timing/normal read cycle (bus clock synchronized)

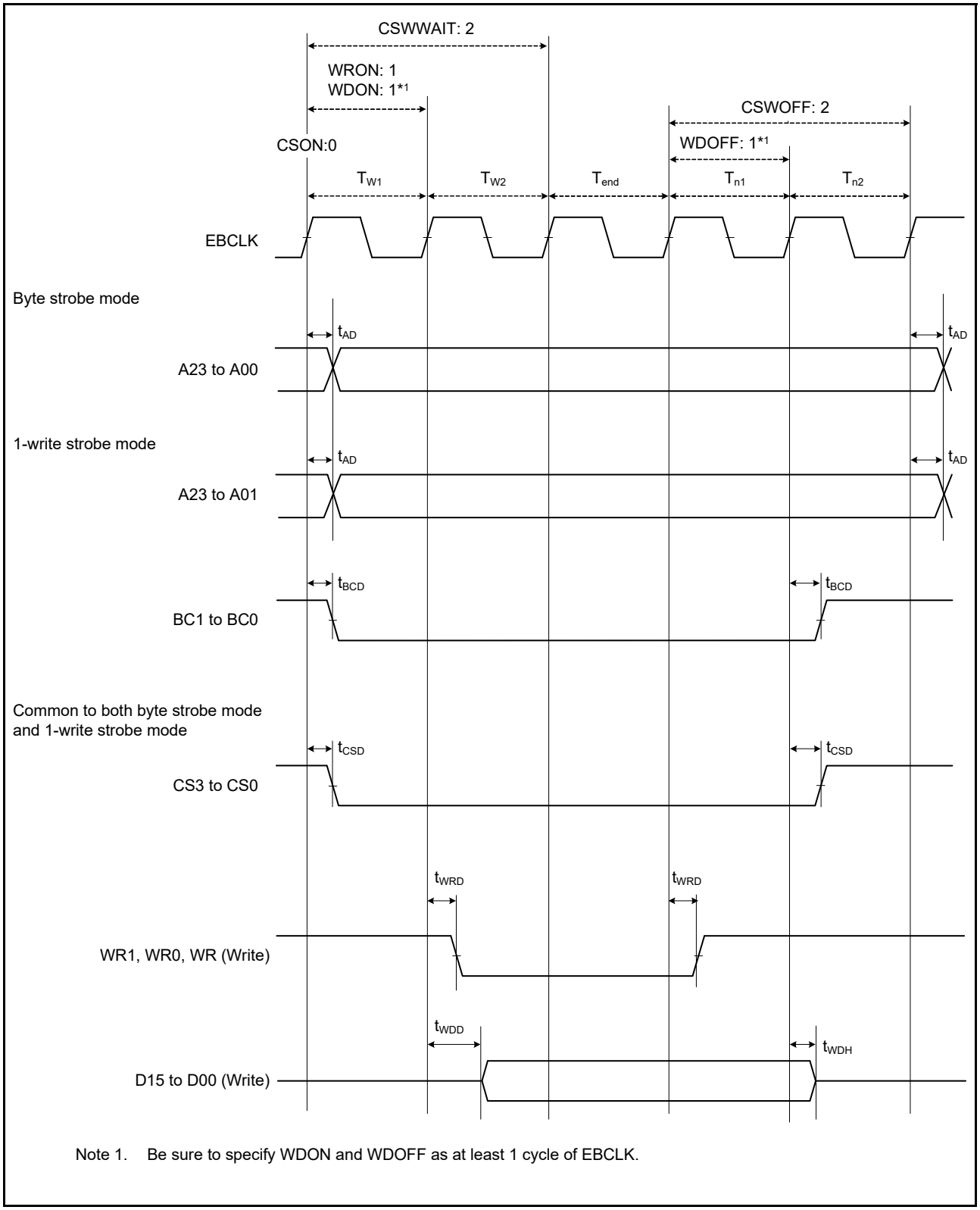

Note 1. Be sure to specify WDON and WDOFF as at least 1 cycle of EBCLK.

Figure 2.43 External bus timing/normal write cycle (bus clock synchronized)

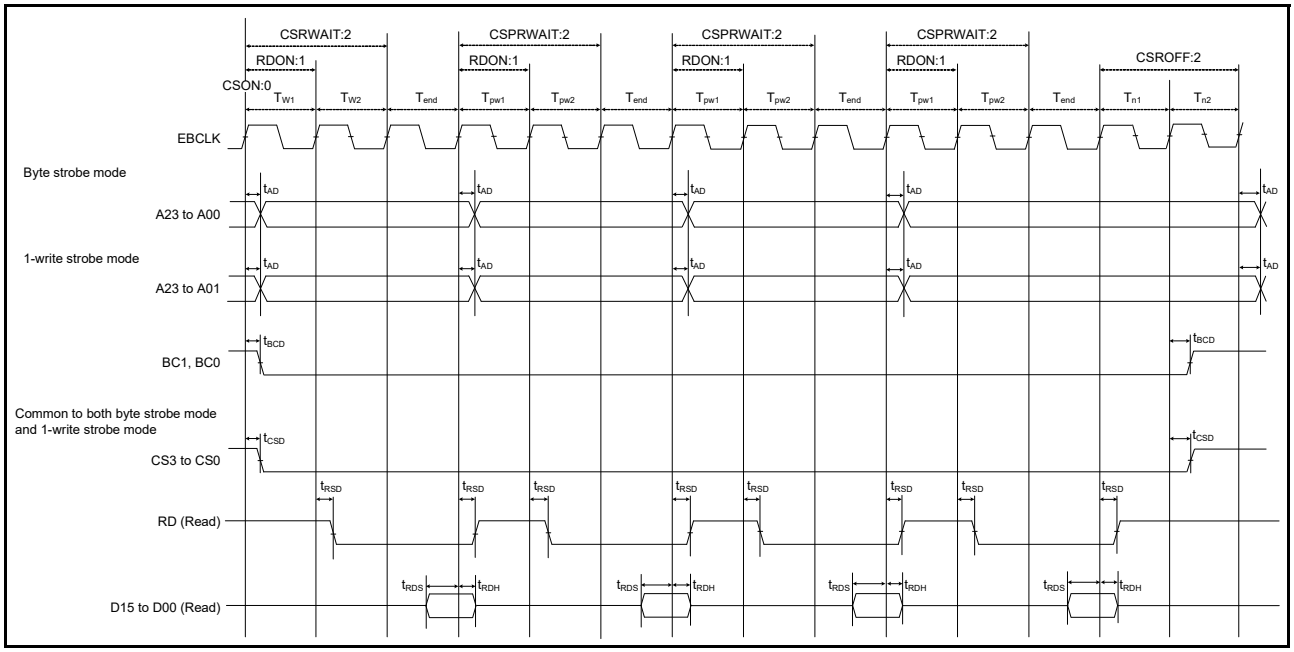

Figure 2.44 External bus timing/page read cycle (bus clock synchronized)

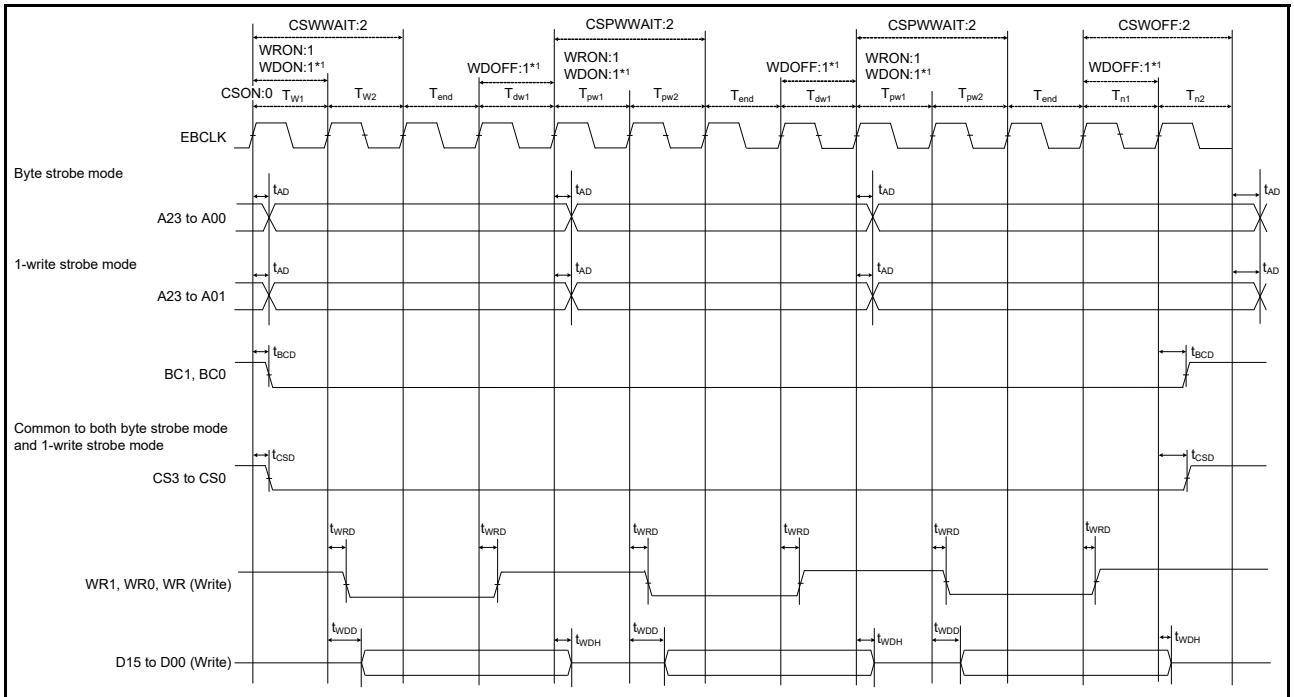

Note 1. Be sure to specify WDON and WDOFF as at least 1 cycle of EBCLK.

Figure 2.45 External bus timing/page write cycle (bus clock synchronized)

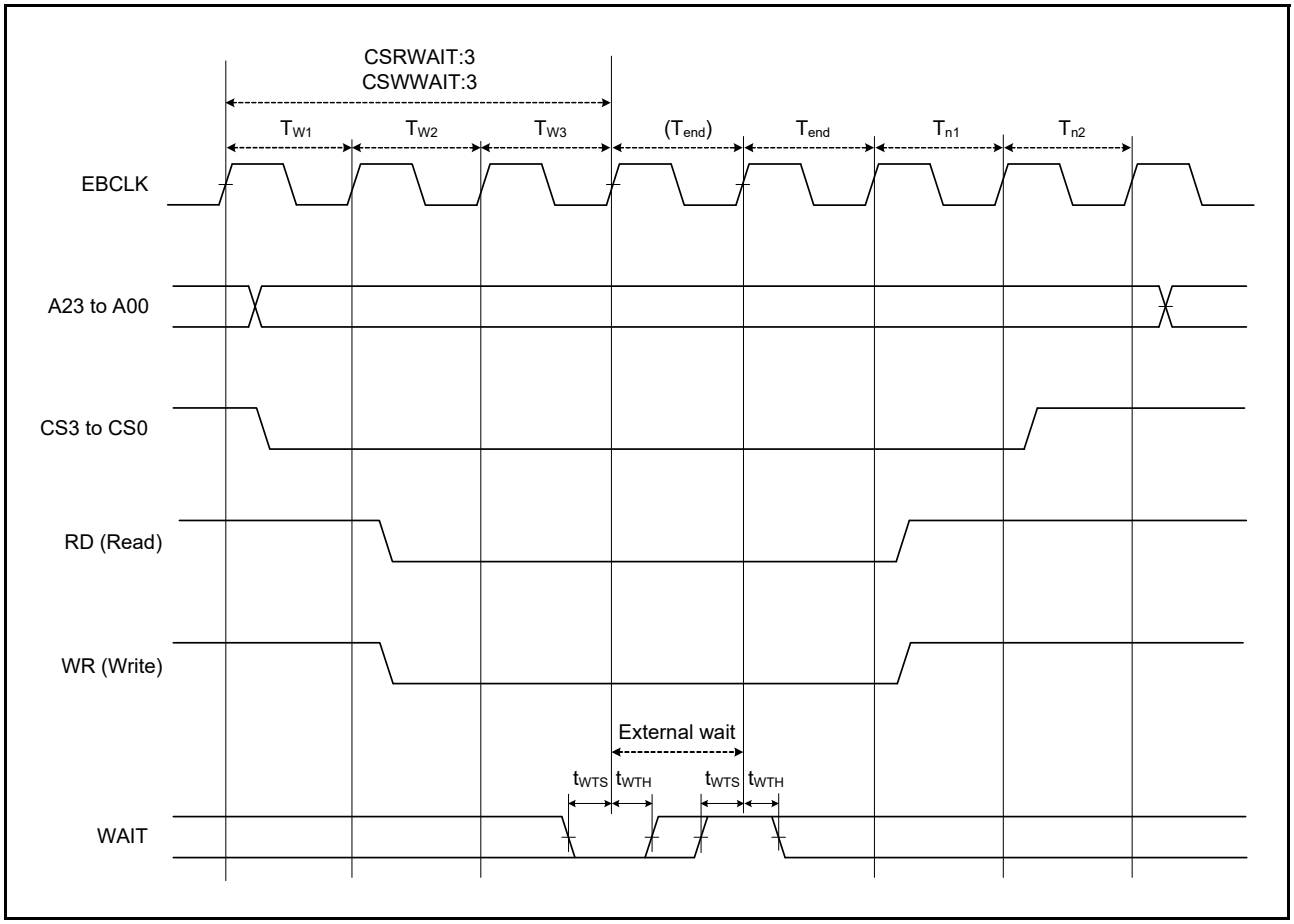

Figure 2.46 External bus timing/external wait control

2.3.7 I/O Ports, POEG, GPT, AGT, KINT, and ADC14 Trigger Timing

Table 2.35 I/O Ports, POEG, GPT, AGT, KINT, and ADC14 trigger timing

Parameter			Symbol	Min	Max	Unit	Test conditions
I/O ports	Input data pulse width		t_{PRW}	1.5	-	t_{Pcyc}	Figure 2.47
	Input/output data cycle (P002, P003, P004, P007)		t_{POcyc}	10	-	us	
POEG	POEG input trigger pulse width		t_{POEW}	3	-	t_{Pcyc}	Figure 2.48
GPT	Input capture pulse width	Single edge	t_{GTICW}	1.5	-	t_{PDcyc}	Figure 2.49
		Dual edge		2.5	-		
AGT	AGTIO, AGTEE input cycle	2.7 V ≤ VCC ≤ 5.5 V	t_{ACYC}*1	250	-	ns	Figure 2.50
		2.4 V ≤ VCC < 2.7 V		500	-	ns	
		1.8 V ≤ VCC < 2.4 V		1000	-	ns	
		1.6 V ≤ VCC < 1.8 V		2000	-	ns	
	AGTIO, AGTEE input high-level width, low-level width	2.7 V ≤ VCC ≤ 5.5 V	t_{ACKWH}, t_{ACKWL}	100	-	ns	
		2.4 V ≤ VCC < 2.7 V		200	-	ns	
		1.8 V ≤ VCC < 2.4 V		400	-	ns	
		1.6 V ≤ VCC < 1.8 V		800	-	ns	
	AGTIO, AGTO, AGTOA, AGTOB output cycle	2.7 V ≤ VCC ≤ 5.5 V	t_{ACYC2}	62.5	-	ns	Figure 2.50
		2.4 V ≤ VCC < 2.7 V		125	-	ns	
		1.8 V ≤ VCC < 2.4 V		250	-	ns	
		1.6 V ≤ VCC < 1.8 V		500	-	ns	
ADC14	14-bit A/D converter trigger input pulse width		t_{TRGW}	1.5	-	t_{Pcyc}	Figure 2.51
KINT	KRn (n = 00 to 07) pulse width		t_{KR}	250	-	ns	Figure 2.52

Note 1. Constraints on AGTIO input: $t_{Pcyc} \times 2 < t_{ACYC}$

Note: t_{Pcyc}: PCLKB cycle, t_{PDcyc}: PCLKD cycle

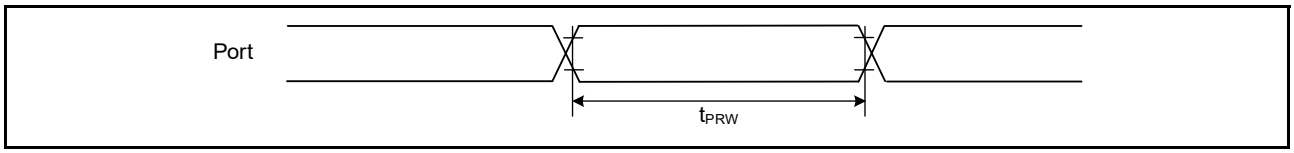

Figure 2.47 I/O ports input timing

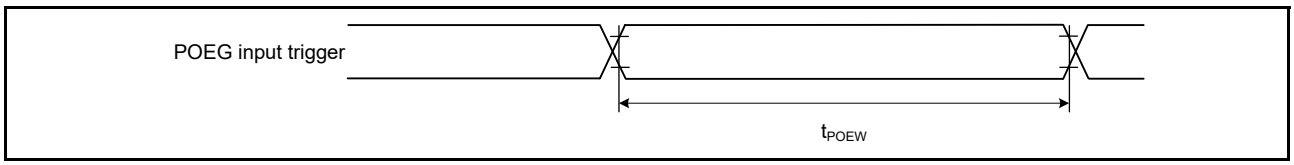

Figure 2.48 POEG input trigger timing

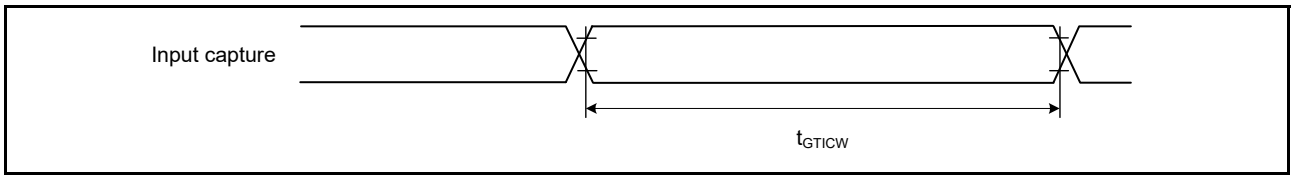

Figure 2.49 GPT input capture timing

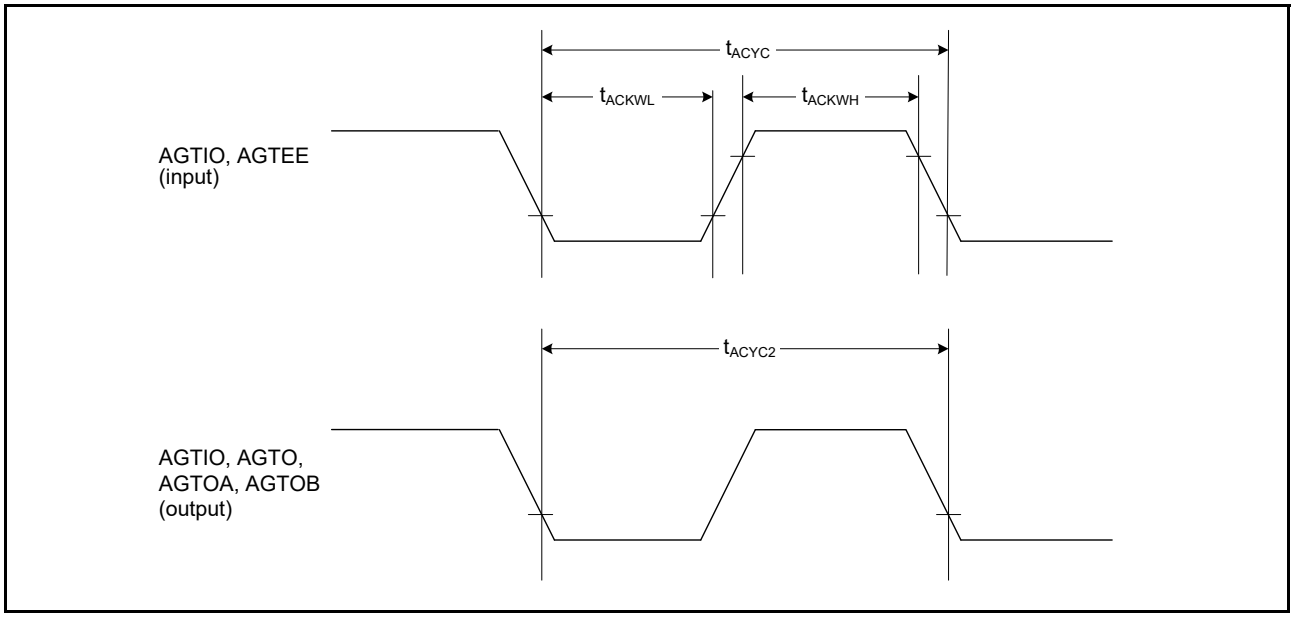

Figure 2.50 AGT I/O timing

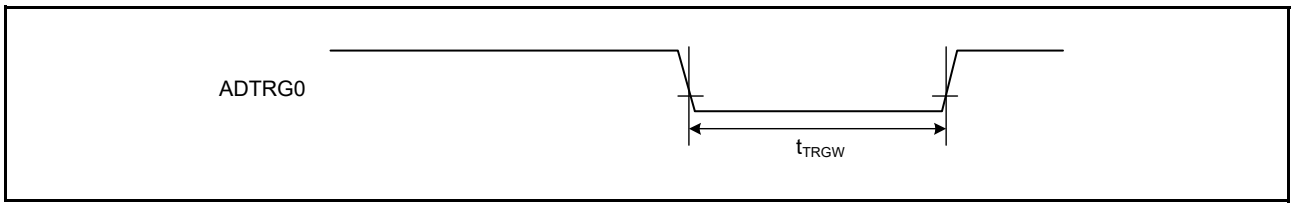

Figure 2.51 ADC14 trigger input timing

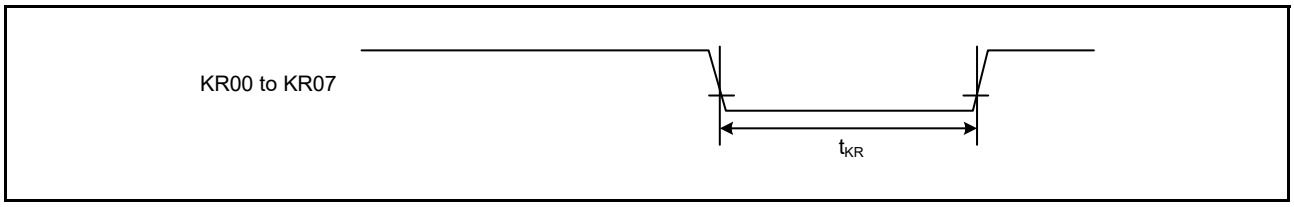

Figure 2.52 Key interrupt input timing

2.3.8 CAC Timing

Table 2.36 CAC timing

Parameter			Symbol	Min	Typ	Max	Unit	Test conditions
CAC	CACREF input pulse width	t_{PBcyc}*1 ≤ t_{cac}*2	t_{CACREF}	4.5 × t_{cac} + 3 × t_{PBcyc}*1	-	-	ns	-
		t_{PBcyc}*1 > t_{cac}*2		5 × t_{cac} + 6.5 × t_{PBcyc}*1	-	-	ns	

Note 1. t_{PBcyc}: PCLKB cycle.
Note 2. t_{cac}: CAC count clock source cycle.

2.3.9 SCI Timing

Table 2.37 SCI timing (1)

Parameter				Symbol	Min	Max	Unit*1	Test conditions
SCI	Input clock cycle	Asynchronous		t_{Scyc}	4	-	t_{Pcyc}	Figure 2.53
		Clock synchronous			6	-		
	Input clock pulse width			t_{SCKW}	0.4	0.6	t_{Scyc}	
	Input clock rise time			t_{SCKr}	-	20	ns	
	Input clock fall time			t_{SCKf}	-	20	ns	
	Output clock cycle	Asynchronous		t_{Scyc}	6	-	t_{Pcyc}	
		Clock synchronous			4	-		
	Output clock pulse width			t_{SCKW}	0.4	0.6	t_{Scyc}	
	Output clock rise time		1.8 V or above	t_{SCKr}	-	20	ns	
			1.6 V or above		-	30		
	Output clock fall time		1.8 V or above	t_{SCKf}	-	20	ns	
			1.6 V or above		-	30		
	Transmit data delay (master)	Clock synchronous	1.8 V or above	t_{TXD}	-	40	ns	Figure 2.54
			1.6 V or above		-	45		
	Transmit data delay (slave)	Clock synchronous	2.7 V or above		-	55	ns	
			2.4 V or above		-	60		
			1.8 V or above		-	100		
			1.6 V or above		-	125		
	Receive data setup time (master)	Clock synchronous	2.7 V or above	t_{RXS}	45	-	ns	
			2.4 V or above		55	-		
			1.8 V or above		90	-		
			1.6 V or above		110	-		
	Receive data setup time (slave)	Clock synchronous	2.7 V or above		40	-	ns	
			1.6 V or above		45	-		
	Receive data hold time (master)	Clock synchronous		t_{RXH}	5	-	ns	
	Receive data hold time (slave)	Clock synchronous		t_{RXH}	40	-	ns	

Note 1. t_{Pcyc}: PCLKA cycle.

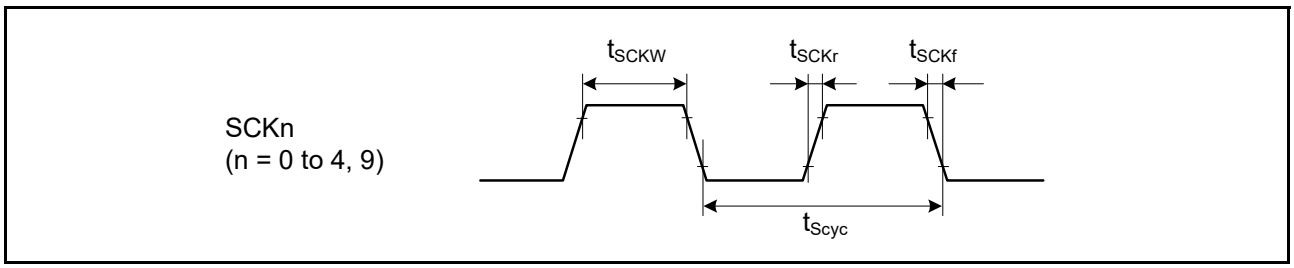

Figure 2.53 SCK clock input timing

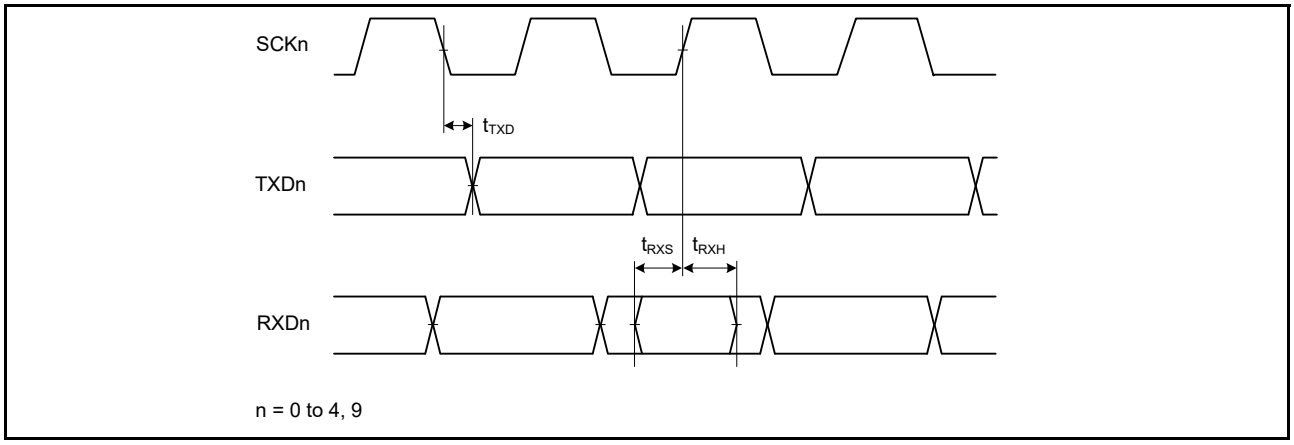

Figure 2.54 SCI input/output timing in clock synchronous mode

Table 2.38 SCI timing (2) (1 of 2)

Parameter				Symbol	Min	Max	Unit	Test conditions
Simple SPI	SCK clock cycle output (master)			t_{SPcyc}	4	65,536	t_{Pcyc}	Figure 2.55
	SCK clock cycle input (slave)				6	65,536		
	SCK clock high pulse width			t_{SPCKWH}	0.4	0.6	t_{SPcyc}	
	SCK clock low pulse width			t_{SPCKWL}	0.4	0.6	t_{SPcyc}	
	SCK clock rise and fall time		1.8 V or above	t_{SPCKr}, t_{SPCKf}	-	20	ns	
			1.6 V or above		-	30		
	Data input setup time	Master	2.7 V or above	t_{SU}	45	-	ns	Figure 2.56 to Figure 2.59
			2.4 V or above		55	-		
			1.8 V or above		80	-		
			1.6 V or above		110	-		
		Slave	2.7 V or above		40	-		
			1.6 V or above		45	-		
	Data input hold time	Master		t_H	33.3	-	ns	
		Slave			40	-		
	SS input setup time			t_{LEAD}	1	-	t_{SPcyc}	
	SS input hold time			t_{LAG}	1	-	t_{SPcyc}	
	Data output delay	Master	1.8 V or above	t_{OD}	-	40	ns	
			1.6 V or above		-	50		
		Slave	2.4 V or above		-	65		
			1.8 V or above		-	100		
			1.6 V or above		-	125		
	Data output hold time	Master	2.7 V or above	t_{OH}	-10	-	ns	
			2.4 V or above		-20	-		
			1.8 V or above		-30	-		
			1.6 V or above		-40	-		
		Slave			-10	-		
	Data rise and fall time	Master	1.8 V or above	t_{Dr}, t_{Df}	-	20	ns	
			1.6 V or above		-	30		
		Slave	1.8 V or above		-	20		
			1.6 V or above		-	30		

Table 2.38 SCI timing (2) (2 of 2)

Parameter		Symbol	Min	Max	Unit	Test conditions
Simple SPI	Slave access time	t_{SA}	-	10 (PCLKA > 32 MHz), 6 (PCLKA ≤ 32 MHz)	t_{Pcyc}	Figure 2.58 and Figure 2.59
	Slave output release time	t_{REL}	-	10 (PCLKA > 32 MHz), 6 (PCLKA ≤ 32 MHz)	t_{Pcyc}	

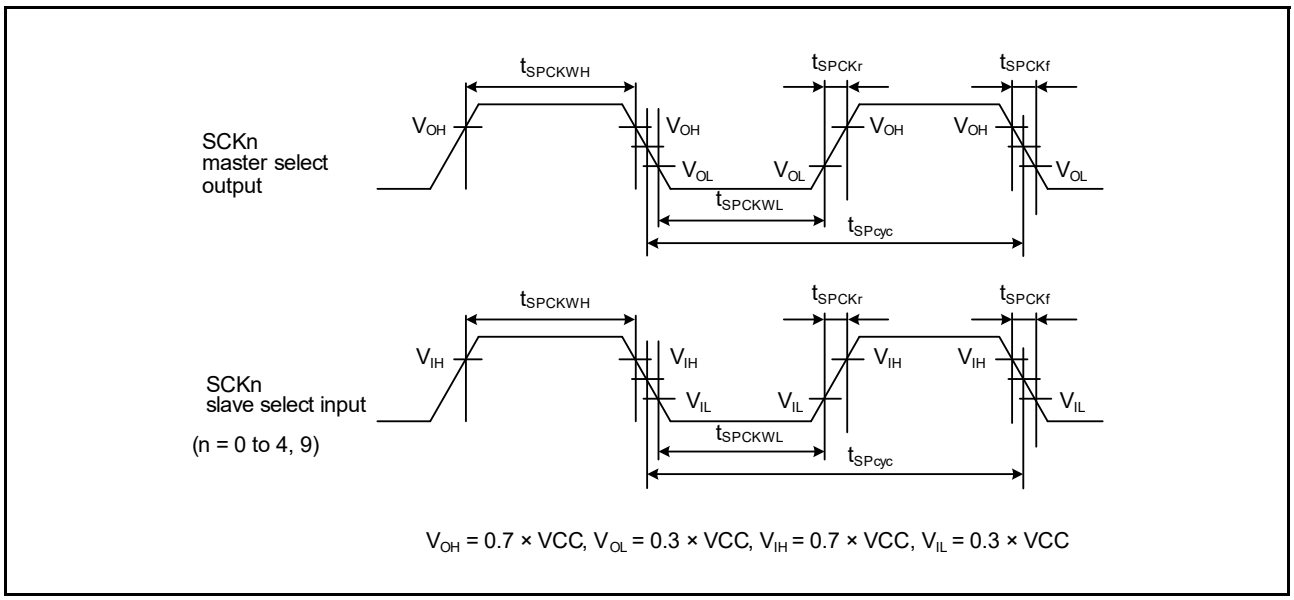

Figure 2.55 SCI simple SPI mode clock timing

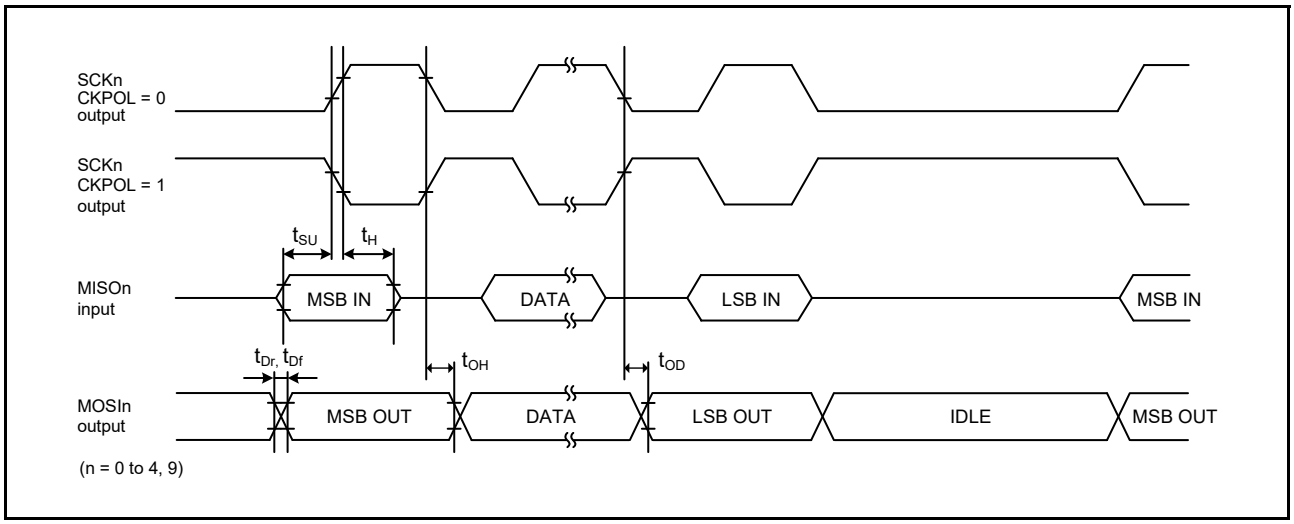

Figure 2.56 SCI simple SPI mode timing (master, CKPH = 1)

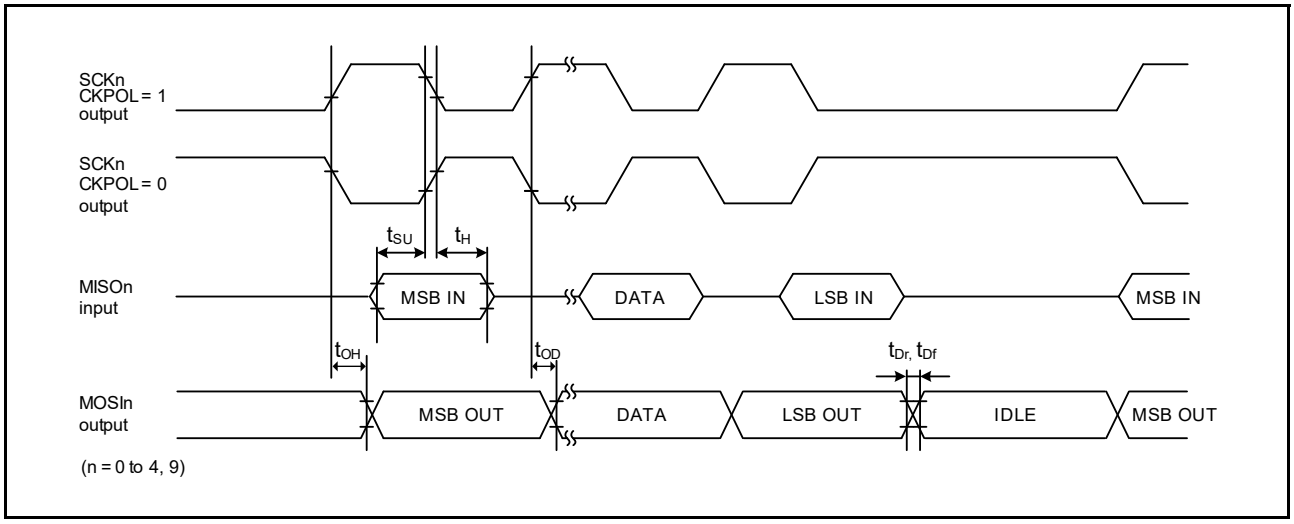

Figure 2.57 SCI simple SPI mode timing (master, CKPH = 0)

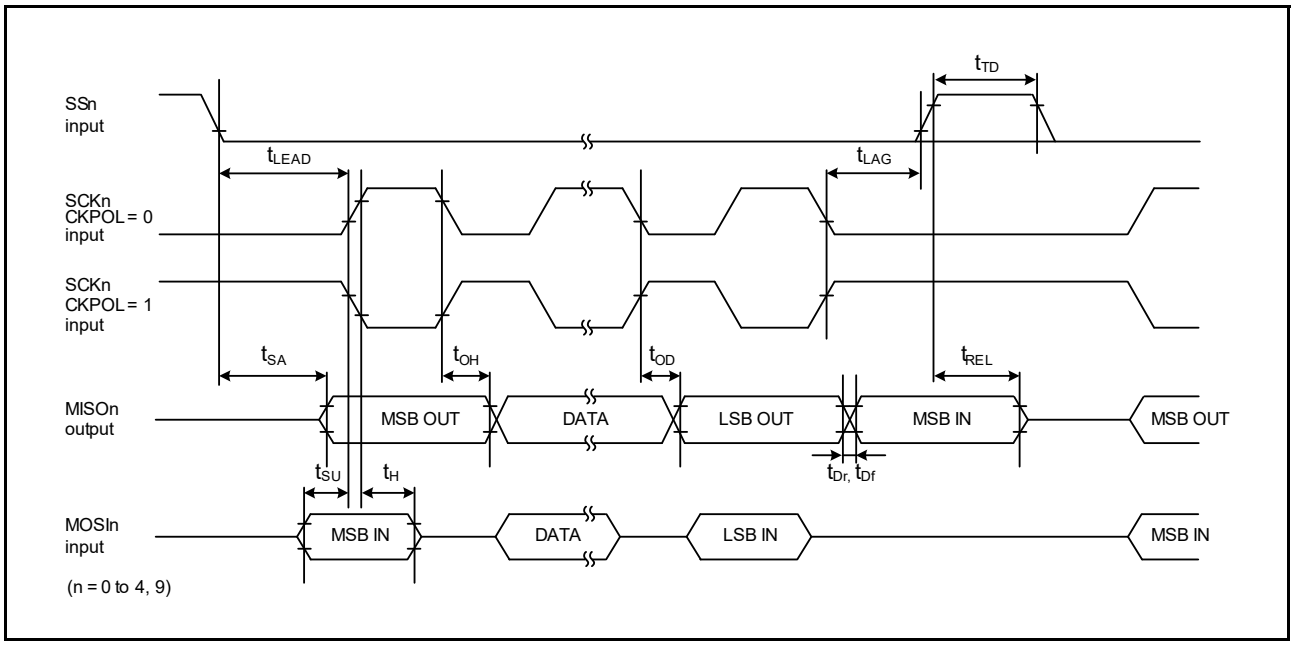

Figure 2.58 SCI simple SPI mode timing (slave, CKPH = 1)

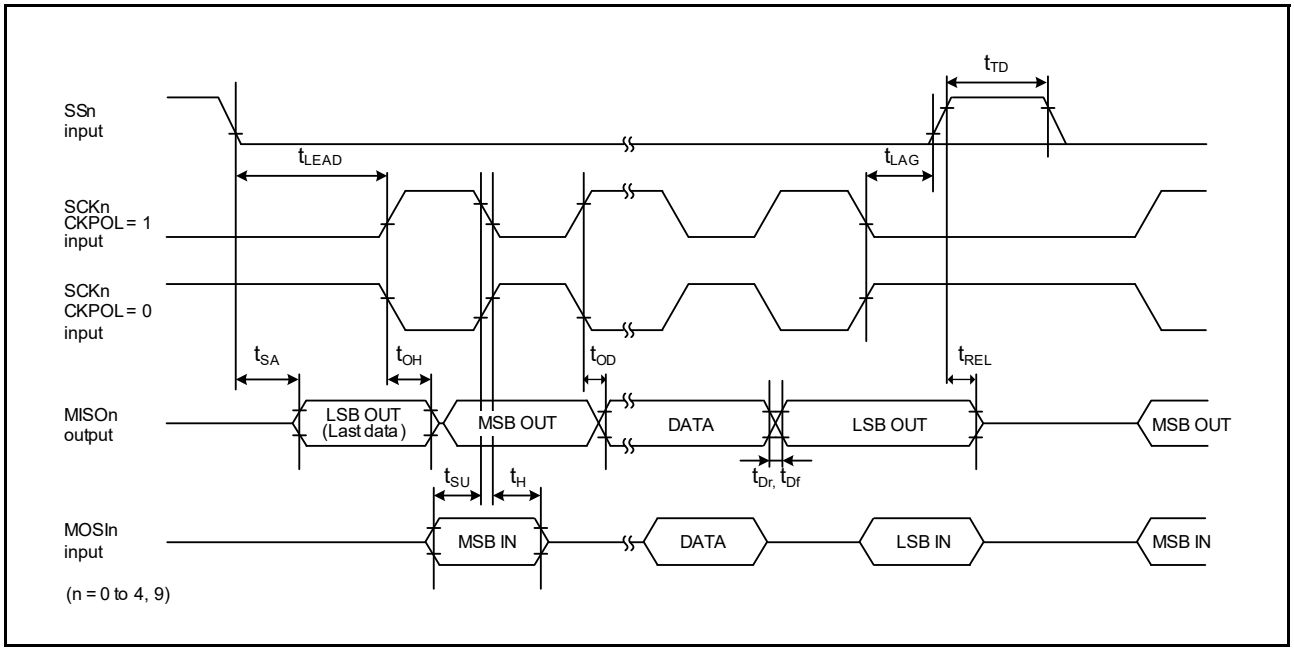

Figure 2.59 SCI simple SPI mode timing (slave, CKPH = 0)

Table 2.39 SCI timing (3)

Conditions: VCC = 2.7 to 5.5 V

Parameter		Symbol	Min	Max	Unit	Test conditions
Simple IIC (Standard mode)	SDA input rise time	t_{Sr}	-	1000	ns	Figure 2.60
	SDA input fall time	t_{Sf}	-	300	ns	
	SDA input spike pulse removal time	t_{SP}	0	$4 \times t_{IICcyc}$*1	ns	
	Data input setup time	t_{SDAS}	250	-	ns	
	Data input hold time	t_{SDAH}	0	-	ns	
	SCL, SDA capacitive load	C_b*2	-	400	pF	
Simple IIC (Fast mode)	SDA input rise time	t_{Sr}	-	300	ns	Figure 2.60 For all ports except P408, use PmnPFS.DSCR of middle drive. For port P408, use PmnPFS.DSCR1/ DSCR of middle drive for IIC fast-mode.
	SDA input fall time	t_{Sf}	-	300	ns	
	SDA input spike pulse removal time	t_{SP}	0	$4 \times t_{IICcyc}$*1	ns	
	Data input setup time	t_{SDAS}	100	-	ns	
	Data input hold time	t_{SDAH}	0	-	ns	
	SCL, SDA capacitive load	C_b*2	-	400	pF	

Note 1. t_{IICcyc}: Clock cycle selected by the SMR.CKS[1:0] bits.

Note 2. C_b indicates the total capacity of the bus line.

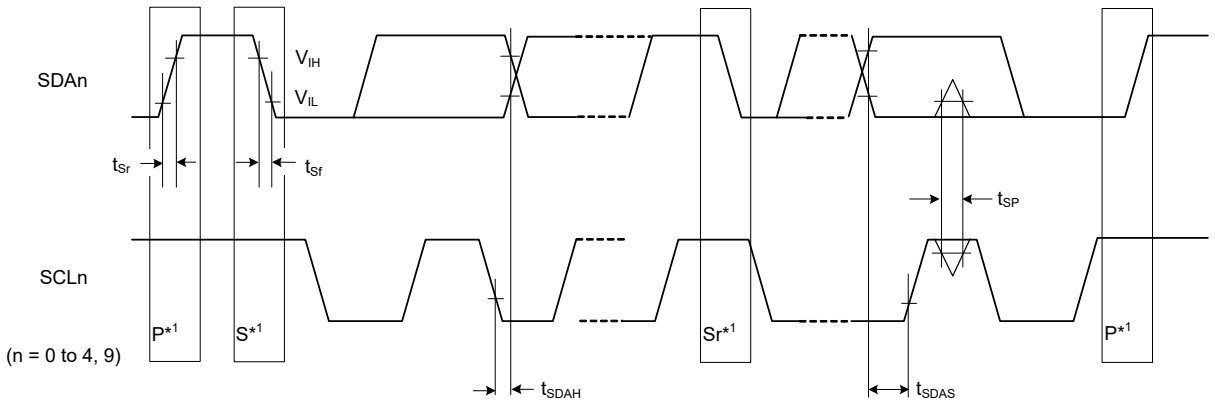

Test conditions:
V_{IH} = VCC × 0.7, V_{IL} = VCC × 0.3
V_{OL} = 0.6 V, I_{OL} = 6 mA

Note 1. S, P, and Sr indicate the following conditions:
S: Start condition
P: Stop condition
Sr: Restart condition.

Figure 2.60 SCI simple IIC mode timing

2.3.10 SPI Timing

Table 2.40 SPI timing (1 of 2)

Conditions: Middle drive output is selected in the Port Drive Capability in PmnPFS register

Parameter				Symbol	Min	Max	Unit*1	Test conditions
SPI	RSPCK clock cycle	Master		t_{SPcyc}	2*4	4096	t_{Pcyc}	Figure 2.61
		Slave			6	4096		
	RSPCK clock high pulse width	Master		t_{SPCKWH}	$(t_{SPcyc} - t_{SPCKr} - t_{SPCKf}) / 2 - 3$	-	ns	
		Slave			$3 \times t_{Pcyc}$	-		
	RSPCK clock low pulse width	Master		t_{SPCKWL}	$(t_{SPcyc} - t_{SPCKr} - t_{SPCKf}) / 2 - 3$	-	ns	
		Slave			$3 \times t_{Pcyc}$	-		
	RSPCK clock rise and fall time	Output	2.7 V or above	t_{SPCKr}, t_{SPCKf}	-	10	ns	
			2.4 V or above		-	15		
			1.8 V or above		-	20		
			1.6 V or above		-	30		
		Input			-	1	μs	
	Data input setup time	Master		t_{SU}	10	-	ns	Figure 2.62 to Figure 2.67
		Slave	2.4 V or above		10	-		
			1.8 V or above		15	-		
			1.6 V or above		20	-		
	Data input hold time	Master (RSPCK is PCLKA/2)		t_{HF}	0	-	ns	
		Master (RSPCK is other than above.)		t_H	t_{Pcyc}	-		
		Slave		t_H	20	-		
	SSL setup time	Master	1.8 V or above	t_{LEAD}	$-30 + N \times t_{Spcyc}$*2	-	ns	
			1.6 V or above		$-50 + N \times t_{Spcyc}$*2	-		
		Slave			$6 \times t_{Pcyc}$	-		
	SSL hold time	Master		t_{LAG}	$-30 + N \times t_{Spcyc}$*3	-		
		Slave			$6 \times t_{Pcyc}$	-		

Table 2.40 SPI timing (2 of 2)

Conditions: Middle drive output is selected in the Port Drive Capability in PmnPFS register

Parameter				Symbol	Min	Max	Unit*1	Test conditions
SPI	Data output delay	Master	2.7 V or above	t_{OD}	-	14	ns	Figure 2.62 to Figure 2.67
			2.4 V or above		-	20		
			1.8 V or above		-	25		
			1.6 V or above		-	30		
		Slave	2.7 V or above		-	50		
			2.4 V or above		-	60		
			1.8 V or above		-	85		
			1.6 V or above		-	110		
	Data output hold time	Master		t_{OH}	0	-	ns	
		Slave			0	-		
	Successive transmission delay	Master		t_{TD}	$t_{SPcyc} + 2 \times t_{Pcyc}$	$8 \times t_{SPcyc} + 2 \times t_{Pcyc}$	ns	
		Slave			$6 \times t_{Pcyc}$	-		
	MOSI and MISO rise and fall time	Output	2.7 V or above	t_{Dr}, t_{Df}	-	10	ns	
			2.4 V or above		-	15		
			1.8 V or above		-	20		
			1.6 V or above		-	30		
		Input			-	1	μs	
	SSL rise and fall time	Output	2.7 V or above	t_{SSLr}, t_{SSLf}	-	10	ns	
			2.4 V or above		-	15		
			1.8 V or above		-	20		
			1.6 V or above		-	30		
		Input			-	1	μs	
	Slave access time		2.4 V or above	t_{SA}	-	$2 \times t_{Pcyc} + 100$	ns	Figure 2.66 and Figure 2.67
			1.8 V or above		-	$2 \times t_{Pcyc} + 140$		
			1.6 V or above		-	$2 \times t_{Pcyc} + 180$		
	Slave output release time		2.4 V or above	t_{REL}	-	$2 \times t_{Pcyc} + 100$	ns	
			1.8 V or above		-	$2 \times t_{Pcyc} + 140$		
			1.6 V or above		-	$2 \times t_{Pcyc} + 180$		

Note 1. t_{Pcyc}: PCLKA cycle.
Note 2. N is set as an integer from 1 to 8 by the SPCKD register.
Note 3. N is set as an integer from 1 to 8 by the SSLND register.
Note 4. The upper limit of RSPCK is 16 MHz.

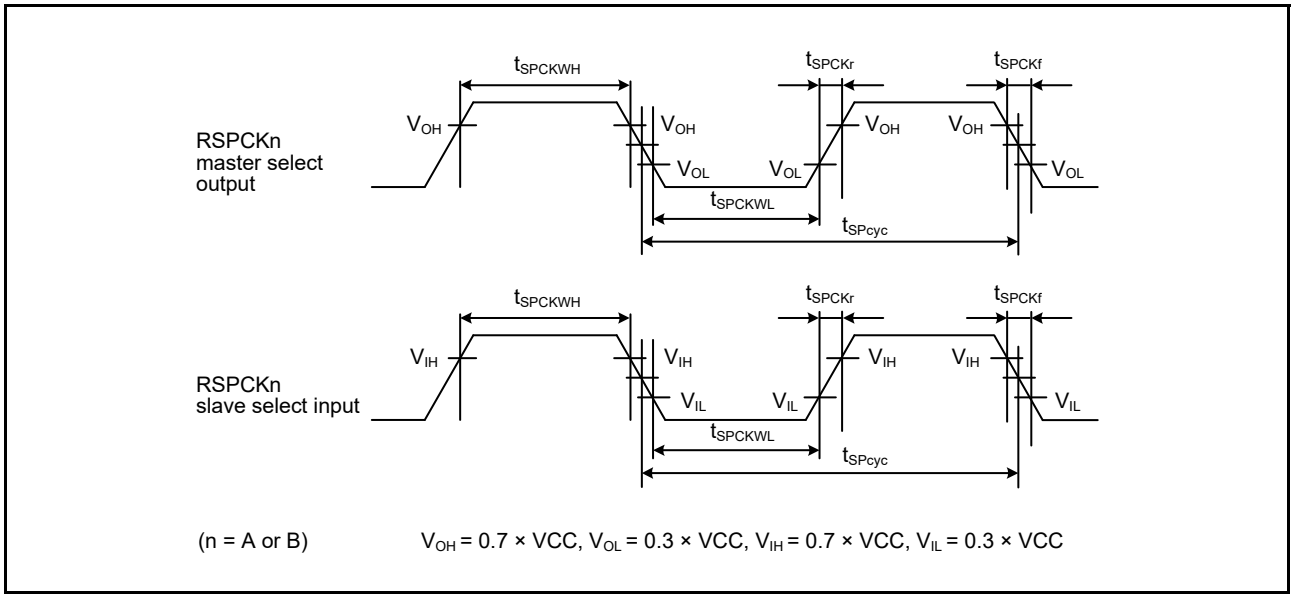

Figure 2.61 SPI clock timing

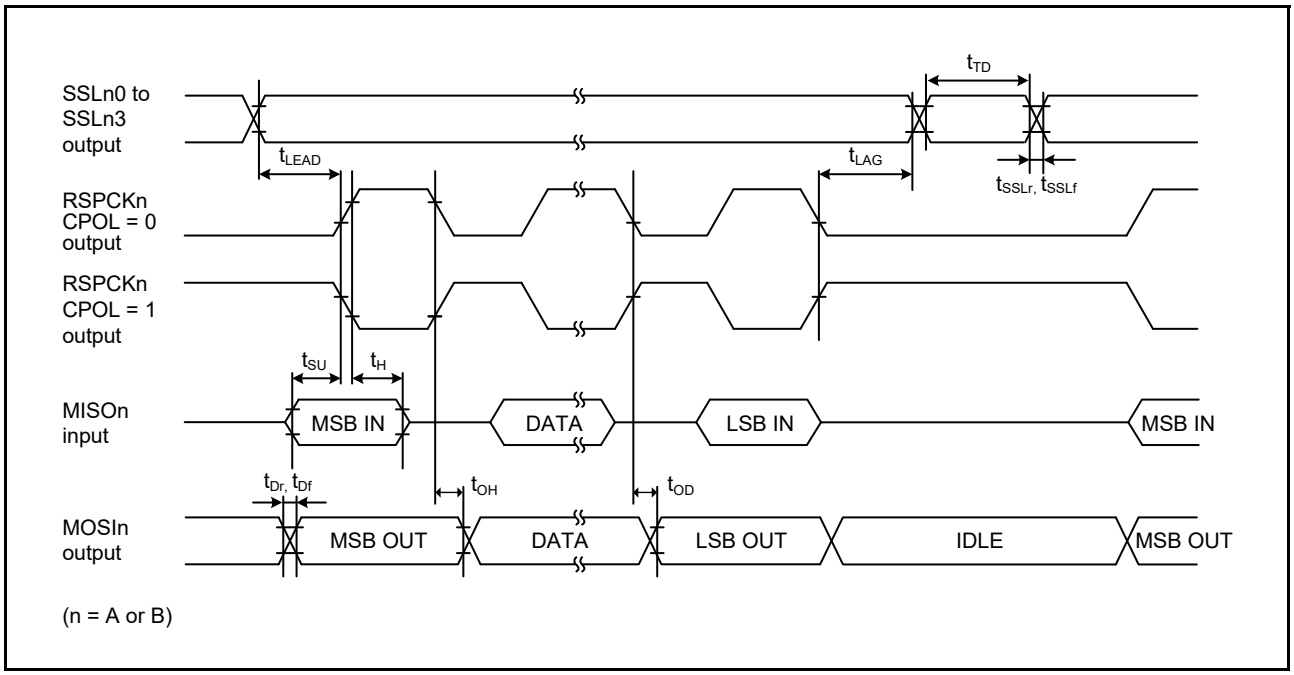

Figure 2.62 SPI timing (master, CPHA = 0) (bit rate: PCLKA division ratio is set to any value other than 1/2)

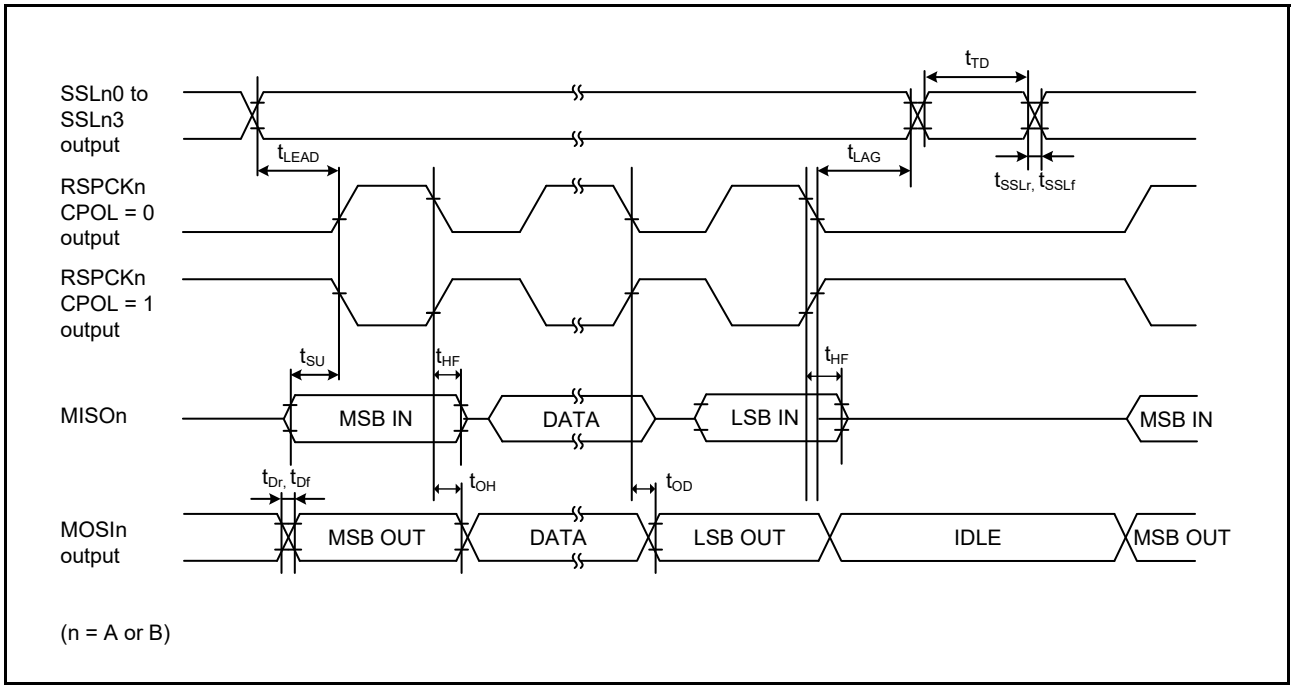

Figure 2.63 SPI timing (master, CPHA = 0) (bit rate: PCLKA division ratio is set to 1/2)

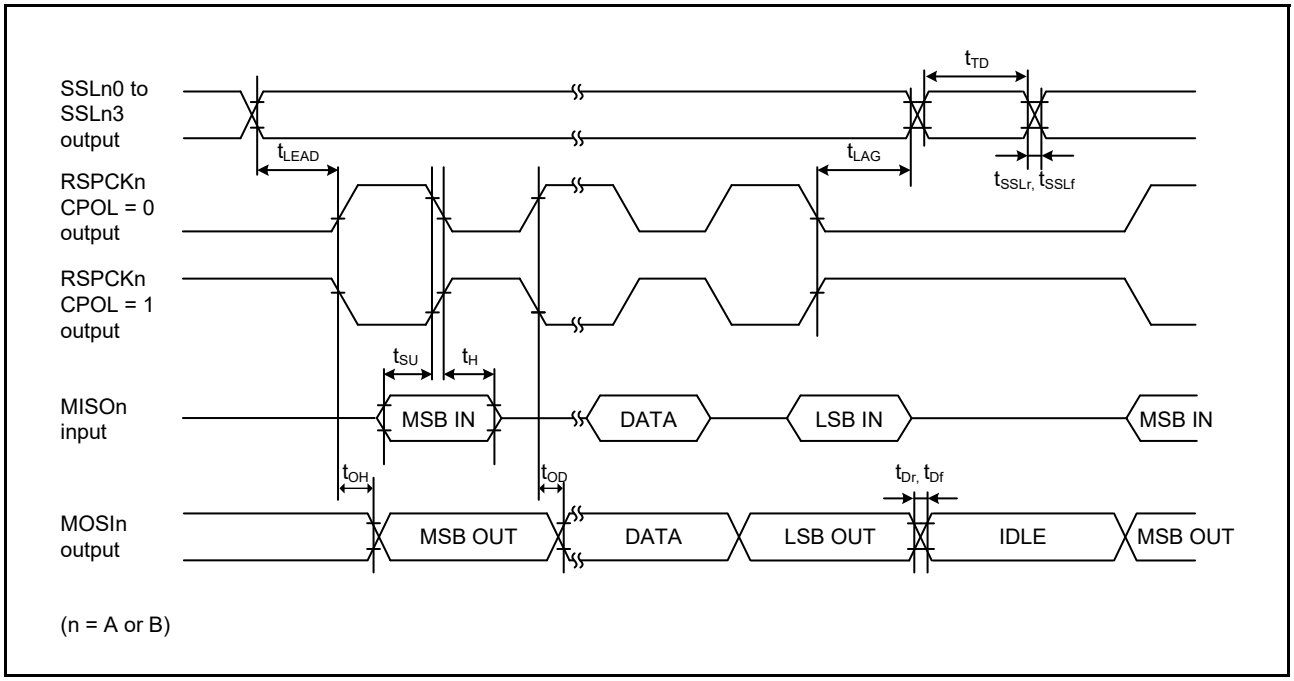

Figure 2.64 SPI timing (master, CPHA = 1) (bit rate: PCLKA division ratio is set to any value other than 1/2)

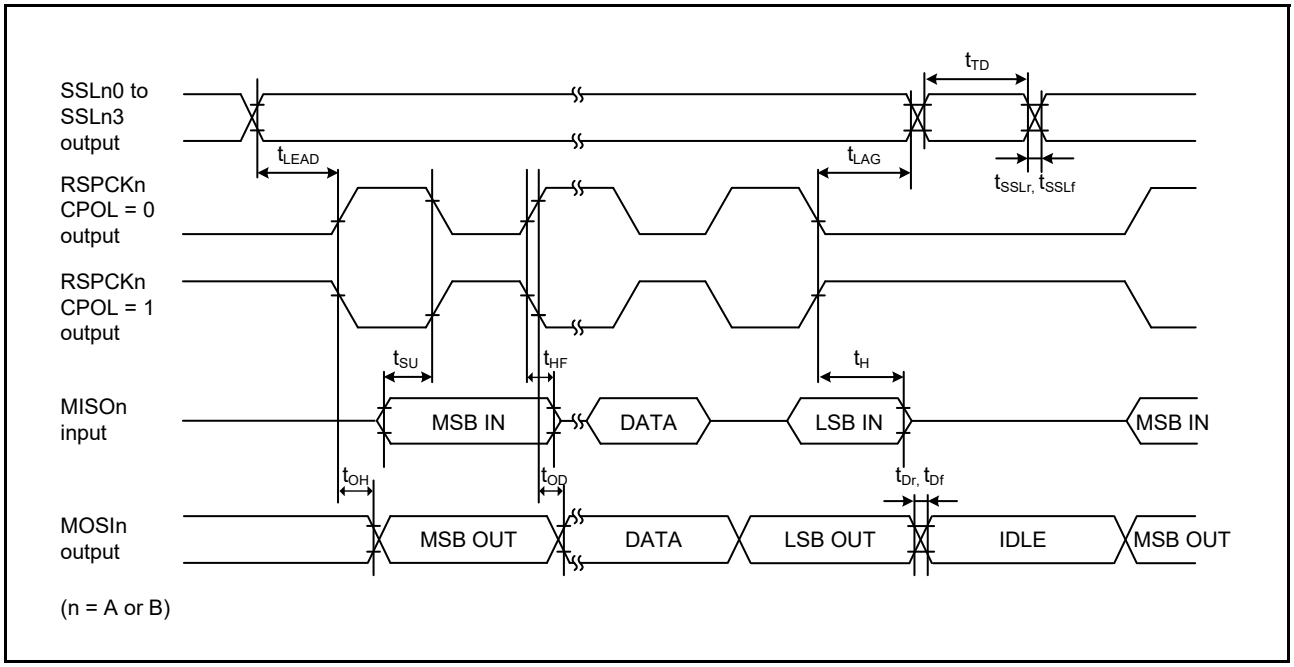

Figure 2.65 SPI timing (master, CPHA = 1) (bit rate: PCLKA division ratio is set to 1/2)

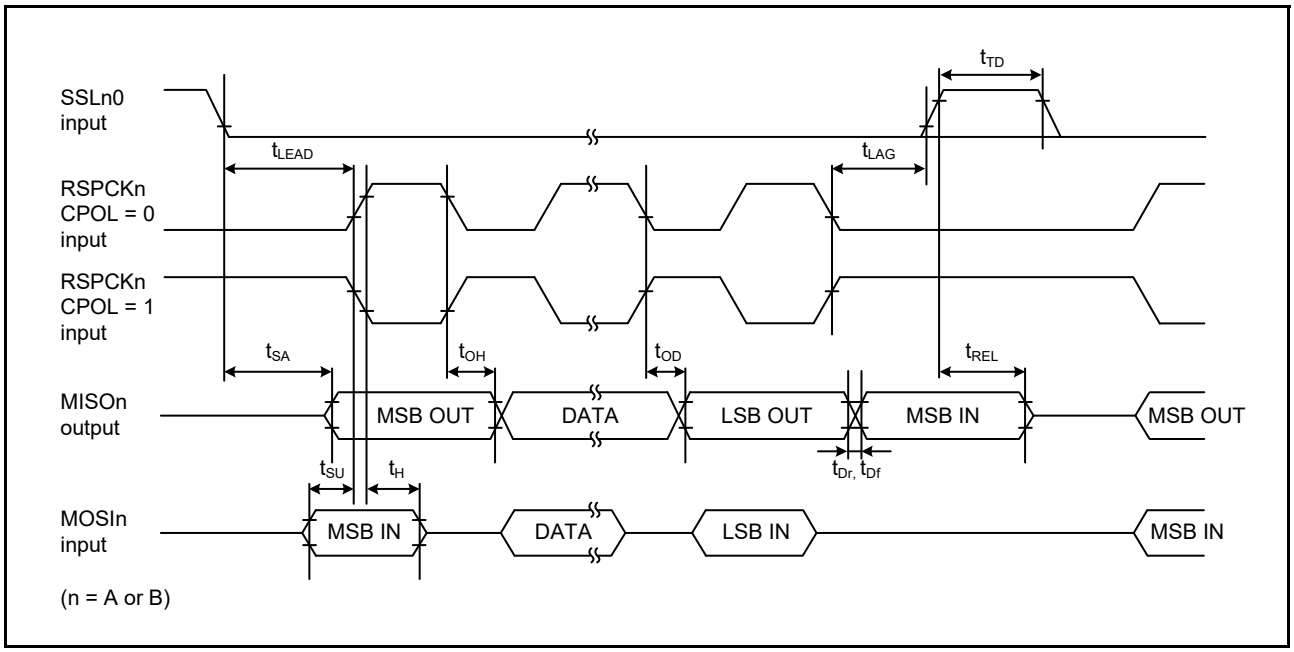

Figure 2.66 SPI timing (slave, CPHA = 0)

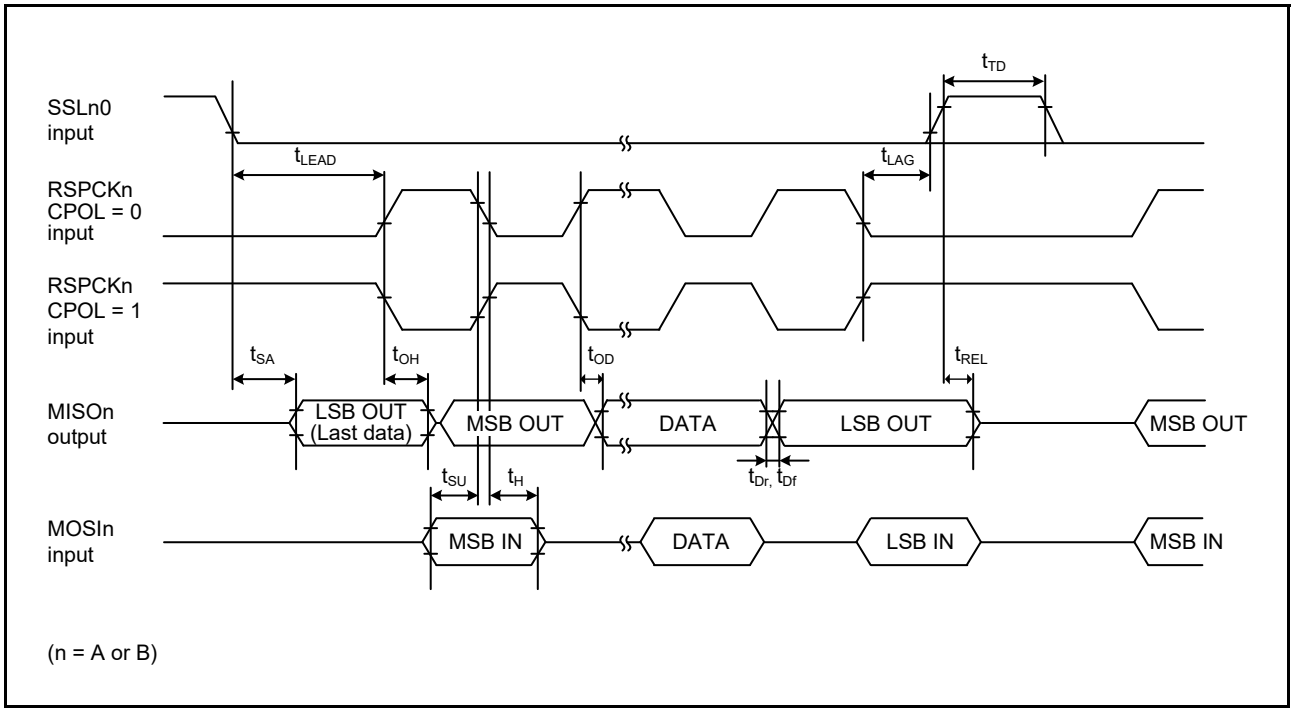

Figure 2.67 SPI timing (slave, CPHA = 1)

2.3.11 QSPI Timing

Table 2.41 QSPI timing

Conditions: VCC = 1.8 to 5.5 V

Conditions: Middle drive output is selected in the Port Drive Capability bit in PmnPFS register

Parameter			Symbol	Min	Max	Unit*1	Test conditions
QSPI	QSPCLK clock cycle		t_{QScyc}	2*4	48	t_{Pcyc}	Figure 2.68
	QSPCLK clock high-level pulse width		t_{QSWH}	t_{QScyc} × 0.4	-	ns	
	QSPCLK clock low-level pulse width		t_{QSWL}	t_{QScyc} × 0.4	-	ns	
	Data input setup time		t_{SU}	25	-	ns	Figure 2.69
	Data input hold time		t_{IH}	2	-	ns	
	SSL setup time		t_{LEAD}	(N + 0.5) × t_{Qscyc} - 15*2	(N + 0.5) × t_{Qscyc} + 100*2	ns	
	SSL hold time		t_{LAG}	(N + 0.5) × t_{Qscyc} - 15*3	(N + 0.5) × t_{Qscyc} + 100*3	ns	
	Data output delay	2.7 V or above	t_{OD}	-	14	ns	
		2.4 V or above		-	20		
		1.8 V or above		-	30		
	Data output hold time	2.7 V or above	t_{OH}	-3.3	-	ns	
		1.8 V or above		-10	-		
	Successive transmission delay		t_{TD}	1	16	t_{Qscyc}	

Note 1. t_{Pcyc}: PCLKA cycle.
Note 2. N is set to 0 or 1 in SFMSLD.
Note 3. N is set to 0 or 1 in SFMSHD.
Note 4. The upper limit of QSPCLK is 16MHz.

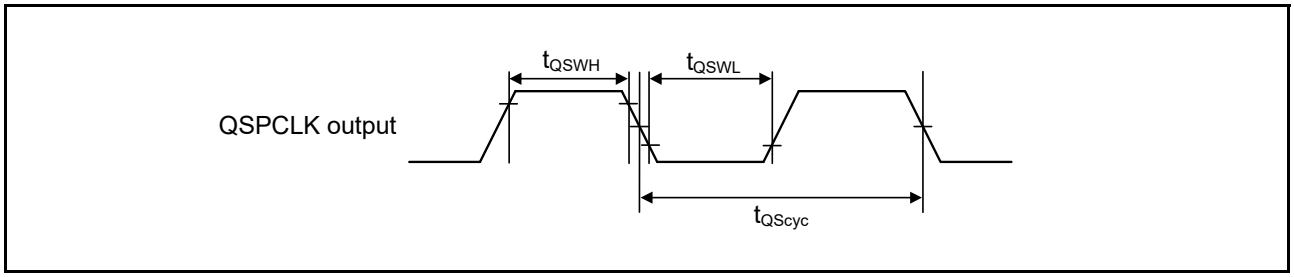

Figure 2.68 QSPI clock timing

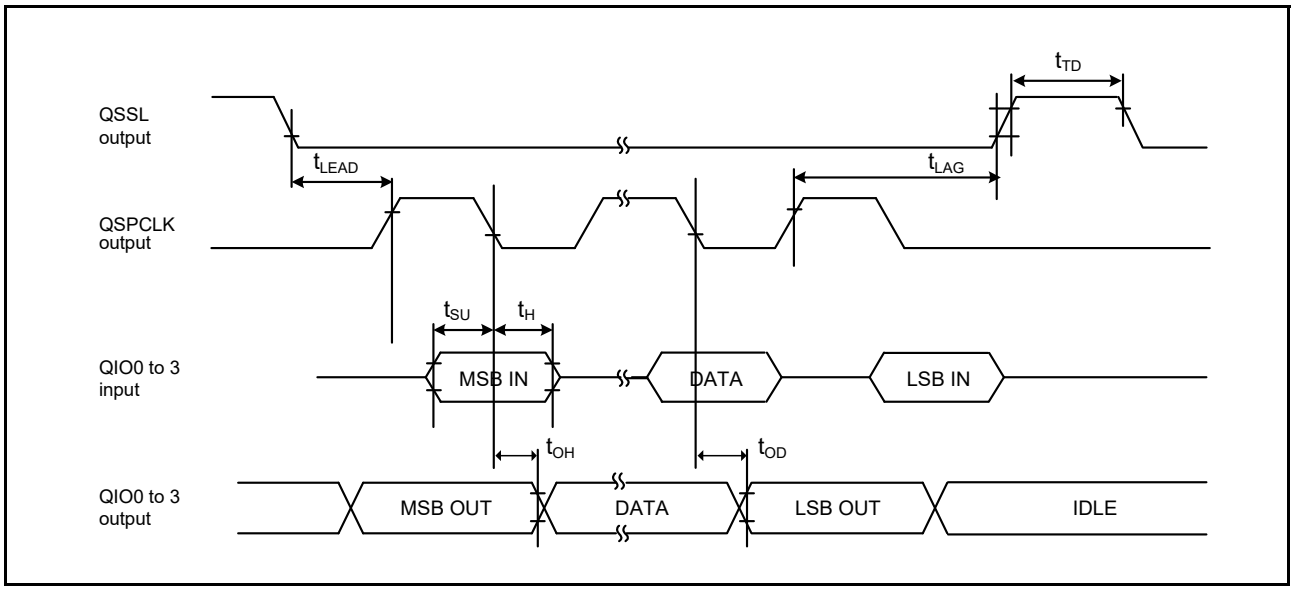

Figure 2.69 Transfer/receive timing

2.3.12 IIC Timing

Table 2.42 IIC timing
Conditions: VCC = 2.7 to 5.5 V

Parameter		Symbol	Min*1	Max	Unit	Test conditions
IIC (standard mode, SMBus)	SCL input cycle time	t_{SCL}	6 (12) × t_{IICcyc} + 1300	-	ns	Figure 2.70
	SCL input high pulse width	t_{SCLH}	3 (6) × t_{IICcyc} + 300	-	ns	
	SCL input low pulse width	t_{SCLL}	3 (6) × t_{IICcyc} + 300	-	ns	
	SCL, SDA input rise time	t_{Sr}	-	1000	ns	
	SCL, SDA input fall time	t_{Sf}	-	300	ns	
	SCL, SDA input spike pulse removal time	t_{SP}	0	1 (4) × t_{IICcyc}	ns	
	SDA input bus free time (When wakeup function is disabled)	t_{BUF}	3 (6) × t_{IICcyc} + 300	-	ns	
	SDA input bus free time (When wakeup function is enabled)	t_{BUF}	3 (6) × t_{IICcyc} + 4 × t_{Pcyc} + 300	-	ns	
	START condition input hold time (When wakeup function is disabled)	t_{STAH}	t_{IICcyc} + 300	-	ns	
	START condition input hold time (When wakeup function is enabled)	t_{STAH}	1 (5) × t_{IICcyc} + t_{Pcyc} + 300	-	ns	
	Repeated START condition input setup time	t_{STAS}	1000	-	ns	
	STOP condition input setup time	t_{STOS}	1000	-	ns	
	Data input setup time	t_{SDAS}	t_{IICcyc} + 50	-	ns	
	Data input hold time	t_{SDAH}	0	-	ns	
	SCL, SDA capacitive load	C_b	-	400	pF	
IIC (Fast mode)	SCL input cycle time	t_{SCL}	6 (12) × t_{IICcyc} + 600	-	ns	Figure 2.70 For all ports except P408, use PmnPFS.DSCR of middle drive. For port P408, use PmnPFS.DSCR 1/DSCR of middle drive for IIC fast-mode.
	SCL input high pulse width	t_{SCLH}	3 (6) × t_{IICcyc} + 300	-	ns	
	SCL input low pulse width	t_{SCLL}	3 (6) × t_{IICcyc} + 300	-	ns	
	SCL, SDA input rise time	t_{Sr}	-	300	ns	
	SCL, SDA input fall time	t_{Sf}	-	300	ns	
	SCL, SDA input spike pulse removal time	t_{SP}	0	1 (4) × t_{IICcyc}	ns	
	SDA input bus free time (When wakeup function is disabled)	t_{BUF}	3 (6) × t_{IICcyc} + 300	-	ns	
	SDA input bus free time (When wakeup function is enabled)	t_{BUF}	3 (6) × t_{IICcyc} + 4 × t_{Pcyc} + 300	-	ns	
	START condition input hold time (When wakeup function is disabled)	t_{STAH}	t_{IICcyc} + 300	-	ns	
	START condition input hold time (When wakeup function is enabled)	t_{STAH}	1(5) × t_{IICcyc} + t_{Pcyc} + 300	-	ns	
	Repeated START condition input setup time	t_{STAS}	300	-	ns	
	STOP condition input setup time	t_{STOS}	300	-	ns	
	Data input setup time	t_{SDAS}	t_{IICcyc} + 50	-	ns	
	Data input hold time	t_{SDAH}	0	-	ns	
	SCL, SDA capacitive load	C_b	-	400	pF	

Note: t_{IICcyc}: IIC internal reference clock (IICφ) cycle, t_{Pcyc}: PCLKB cycle
Note 1. The value in parentheses apply when ICMR3.NF[1:0] is set to 11b while the digital filter is enabled with ICFER.NFE set to 1.

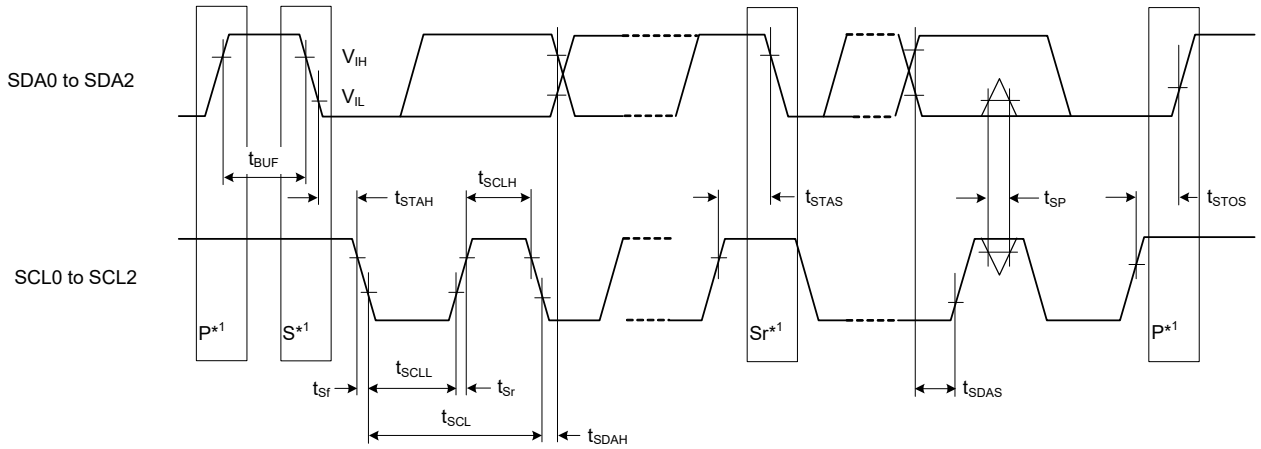

Note 1. S, P, and Sr indicate the following conditions.
S: Start condition
P: Stop condition
Sr: Restart condition

Figure 2.70 I²C bus interface input/output timing

2.3.13 SSIE Timing

Table 2.43 SSIE timing
Conditions: VCC = 1.6 to 5.5 V

Parameter			Symbol	Min	Max	Unit	Test conditions
SSIE	AUDIO_CLK input frequency	2.7 V or above	t_{AUDIO}	-	25	MHz	-
		1.6 V or above		-	4		
	Output clock period		t_O	250	-	ns	Figure 2.71
	Input clock period		t_I	250	-	ns	
	Clock high pulse width	1.8 V or above	t_{HC}	100	-	ns	
		1.6 V or above		200	-		
	Clock low pulse width	1.8 V or above	t_{LC}	100	-	ns	
		1.6 V or above		200	-		
	Clock rise time		t_{RC}	-	25	ns	
	Data delay	2.7 V or above	t_{DTR}	-	65	ns	Figure 2.72, Figure 2.73
		1.8 V or above		-	105		
		1.6 V or above		-	140		
	Set-up time	2.7 V or above	t_{SR}	65	-	ns	
		1.8 V or above		90	-		
		1.6 V or above		140	-		
	Hold time		t_{HTR}	40	-	ns	
	SSITXD0 output delay from SSILRCK/SSIFS change time	1.8 V or above	t_{DTRW}	-	105	ns	Figure 2.74
		1.6 V or above		-	140		

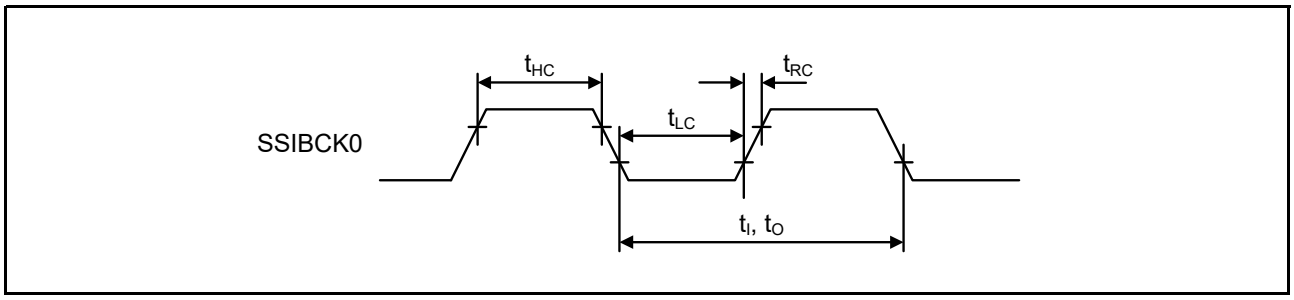

Figure 2.71 SSIE clock input/output timing

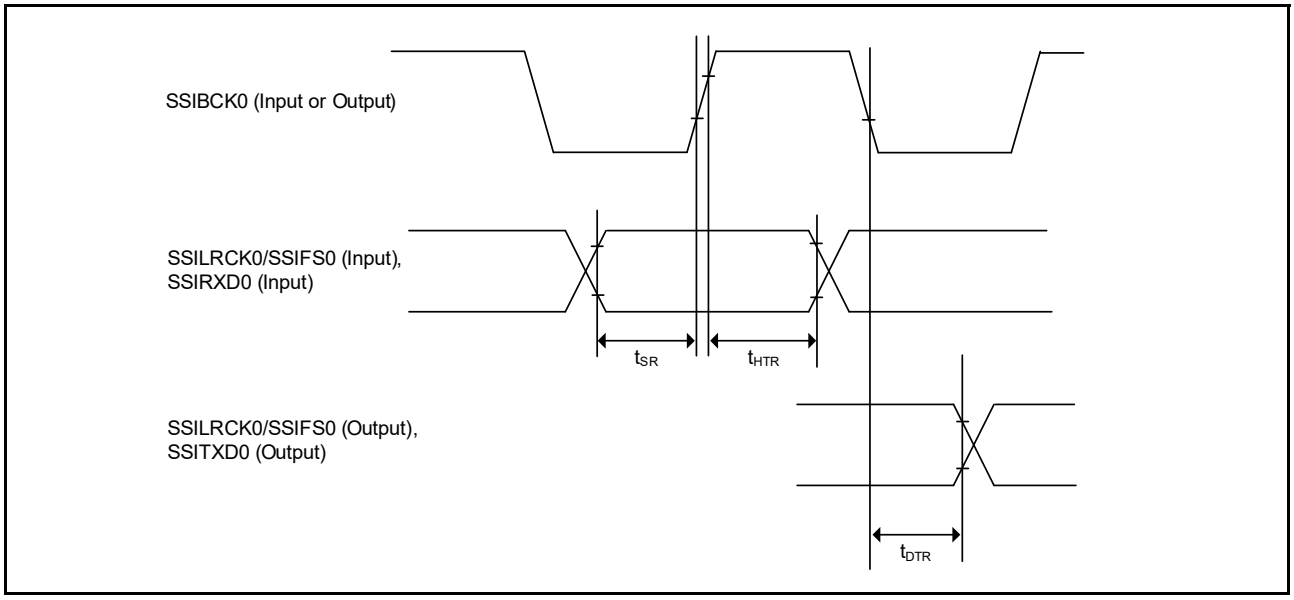

Figure 2.72 SSIE data transmit/receive timing (SSICR.BCKP = 0)

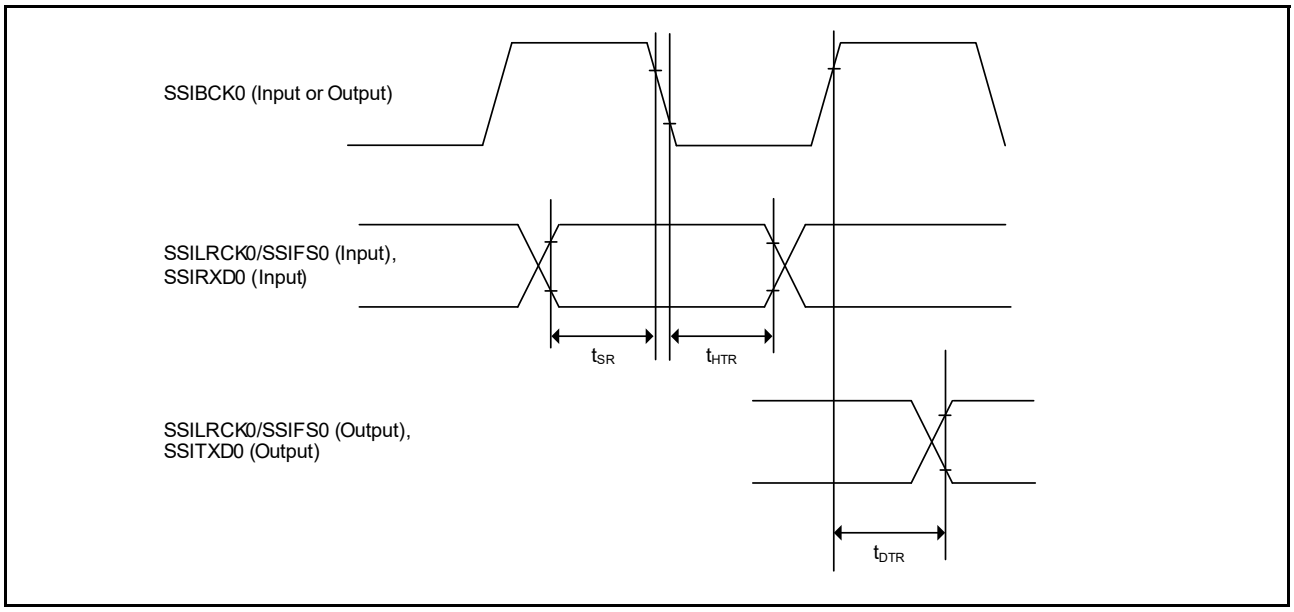

Figure 2.73 SSIE data transmit/receive timing (SSICR.BCKP = 1)

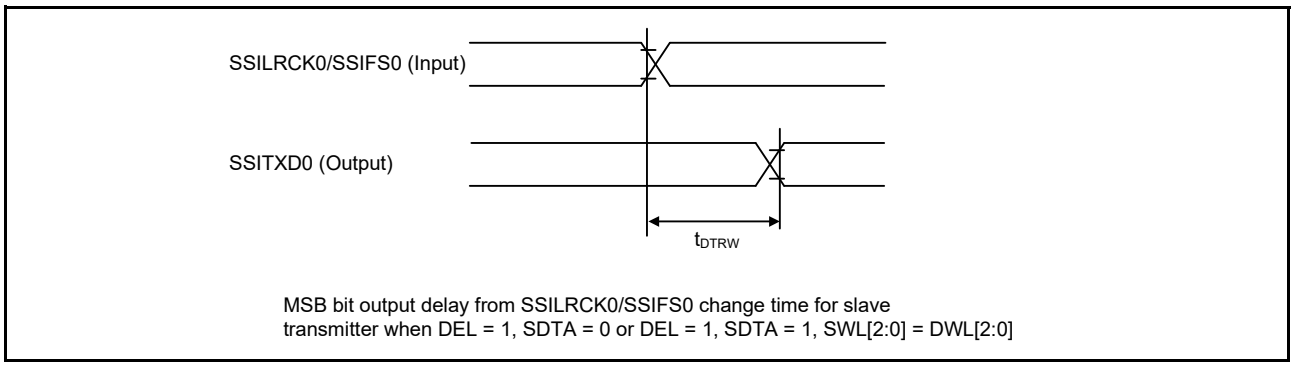

Figure 2.74 SSIE data output delay from SSILRCK0/SSIFS0 change time

2.3.14 SD/MMC Host Interface Timing

Table 2.44 SD/MMC host interface signal timing

Conditions: VCC = 2.7 to 5.5 V
Middle drive output is selected in the Port Drive Capability in PmnPFS register

Parameter	Symbol	Min	Max	Unit	Test conditions
SDCLK clock cycle	t_{SDCYC}	62.5	-	ns	Figure 2.75
SDCLK clock high-level pulse width	t_{SDWH}	18.25	-	ns	
SDCLK clock low-level pulse width	t_{SDWL}	18.25	-	ns	
SDCLK clock rising time	t_{SDLH}	-	10	ns	
SDCLK clock falling time	t_{SDHL}	-	10	ns	
SDCMD/SDDAT output data delay	t_{SDODLY}	-18.25	18.25	ns	
SDCMD/SDDAT input data setup	t_{SDIS}	9.25	-	ns	
SDCMD/SDDAT input data hold	t_{SDIH}	23.25	-	ns	

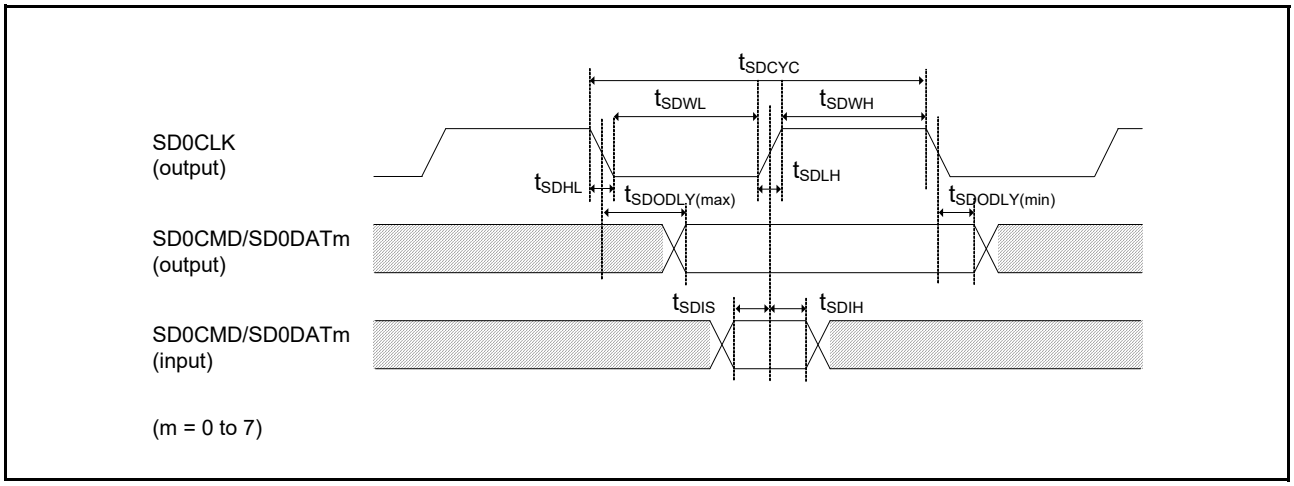

Figure 2.75 SD/MMC host interface signal timing

2.3.15 CLKOUT Timing

Table 2.45 CLKOUT timing

Parameter			Symbol	Min	Max	Unit*1	Test conditions
CLKOUT	CLKOUT pin output cycle*1	VCC = 2.7 V or above	t_{Ccyc}	62.5	-	ns	Figure 2.76
		VCC = 1.8 V or above		125	-		
		VCC = 1.6 V or above		250	-		
	CLKOUT pin high pulse width*2	VCC = 2.7 V or above	t_{CH}	15	-	ns	
		VCC = 1.8 V or above		30	-		
		VCC = 1.6 V or above		150	-		
	CLKOUT pin low pulse width*2	VCC = 2.7 V or above	t_{CL}	15	-	ns	
		VCC = 1.8 V or above		30	-		
		VCC = 1.6 V or above		150	-		
	CLKOUT pin output rise time	VCC = 2.7 V or above	t_{Cr}	-	12	ns	
		VCC = 1.8 V or above		-	25		
		VCC = 1.6 V or above		-	50		
	CLKOUT pin output fall time	VCC = 2.7 V or above	t_{Cf}	-	12	ns	
		VCC = 1.8 V or above		-	25		
		VCC = 1.6 V or above		-	50		

Note 1. When the EXTAL external clock input or an oscillator is used with division by 1 (the CKOCR.CKOSEL[2:0] bits are 011b and the CKOCR.CKODIV[2:0] bits are 000b) to output from CLKOUT, the above should be satisfied with an input duty cycle of 45 to 55%.

Note 2. When the MOCO is selected as the clock output source (the CKOCR.CKOSEL[2:0] bits are 001b), set the clock output division ratio selection to be divided by 2 (the CKOCR.CKODIV[2:0] bits are 001b).

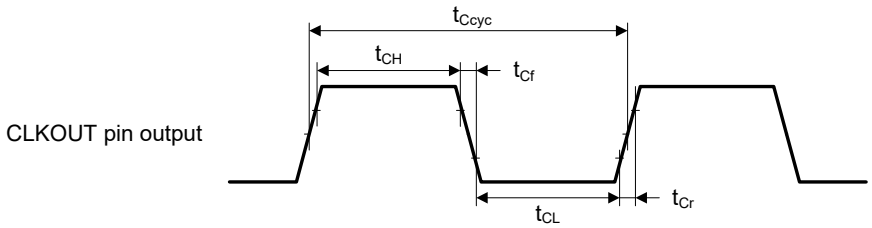

Test conditions: V_{OH} = VCC × 0.7, V_{OL} = VCC × 0.3, I_{OH} = -1.0 mA, I_{OL} = 1.0 mA, C = 30 pF

Figure 2.76 CLKOUT output timing

2.4 USB Characteristics

2.4.1 USBFS Timing

Table 2.46 USB characteristics

Conditions: VCC = VCC_USB = 3.0 to 3.6 V, Ta = -20 to +85°C (USBCLKSEL = 1), Ta = -40 to +105°C (USBCLKSEL = 0)

Parameter			Symbol	Min	Max	Unit	Test conditions
Input characteristics	Input high-level voltage		V_{IH}	2.0	-	V	-
	Input low level voltage		V_{IL}	-	0.8	V	-
	Differential input sensitivity		V_{DI}	0.2	-	V	| USB_DP - USB_DM |
	Differential common mode range		V_{CM}	0.8	2.5	V	-
Output characteristics	Output high-level voltage		V_{OH}	2.8	VCC_USB	V	I_{OH} = -200 μA
	Output low level voltage		V_{OL}	0.0	0.3	V	I_{OL} = 2 mA
	Cross-over voltage		V_{CRS}	1.3	2.0	V	Figure 2.77, Figure 2.78, Figure 2.79
	Rise time	FS	t_r	4	20	ns	
		LS		75	300		
	Fall time	FS	t_f	4	20	ns	
		LS		75	300		
	Rise/fall time ratio	FS	t_r/t_f	90	111.11	%	
		LS		80	125		
	Output resistance		Z_{DRV}	28	44	Ω	Adjusting the resistance of external elements is not required
VBUS characteristics	VBUS input voltage		V_{IH}	VCC × 0.8	-	V	-
			V_{IL}	-	VCC × 0.2	V	-
Pull-up, pull-down	Pull-down resistor		R_{PD}	14.25	24.80	kΩ	-
	Pull-up resistor		R_{PUI}	0.9	1.575	kΩ	During idle state
			R_{PUA}	1.425	3.09	kΩ	During reception
Battery Charging Specification Ver 1.2	D+ sink current		I_{DP_SINK}	25	175	μA	-
	D– sink current		I_{DM_SINK}	25	175	μA	-
	DCD source current		I_{DP_SRC}	7	13	μA	-
	Data detection voltage		V_{DAT_REF}	0.25	0.4	V	-
	D+ source voltage		V_{DP_SRC}	0.5	0.7	V	Output current = 250 μA
	D– source voltage		V_{DM_SRC}	0.5	0.7	V	Output current = 250 μA

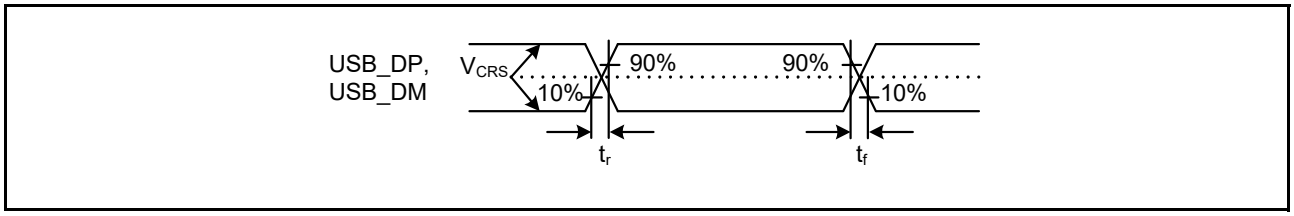

Figure 2.77 USB_DP and USB_DM output timing

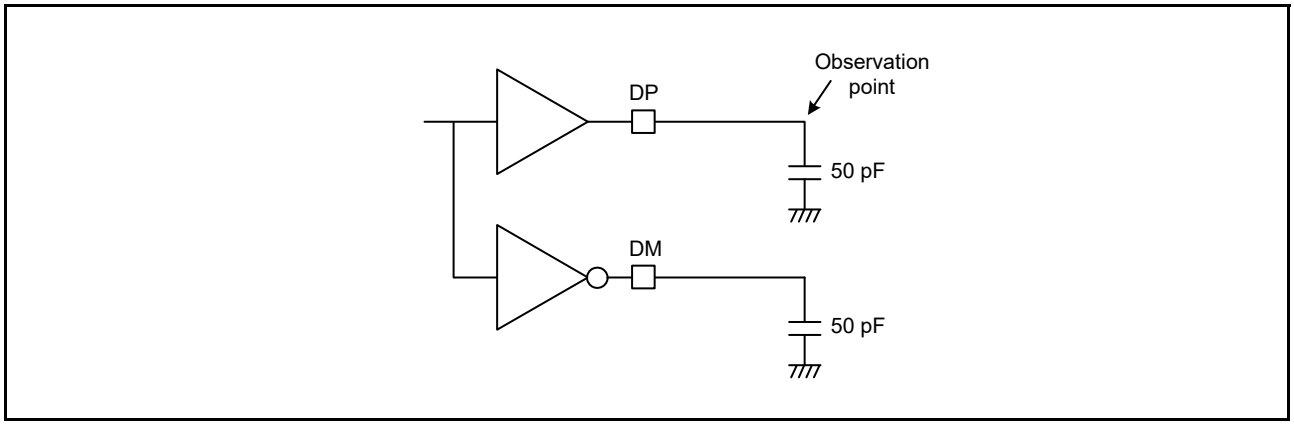

Figure 2.78 Test circuit for Full-Speed (FS) connection

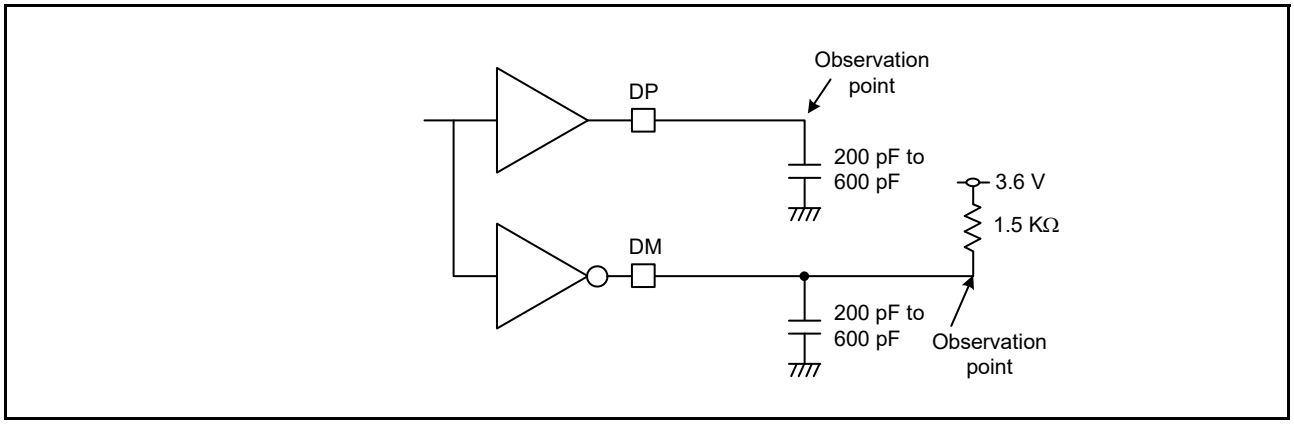

Figure 2.79 Test circuit for Low-Speed (LS) connection

2.4.2 USB External Supply

Table 2.47 USB regulator

Parameter		Min	Typ	Max	Unit	Test conditions
VCC_USB supply current	VCC_USB_LDO ≥ 3.8V	-	-	50	mA	-
	VCC_USB_LDO ≥ 4.5V	-	-	100	mA	-
VCC_USB supply voltage		3.0	-	3.6	V	-

2.5 ADC14 Characteristics

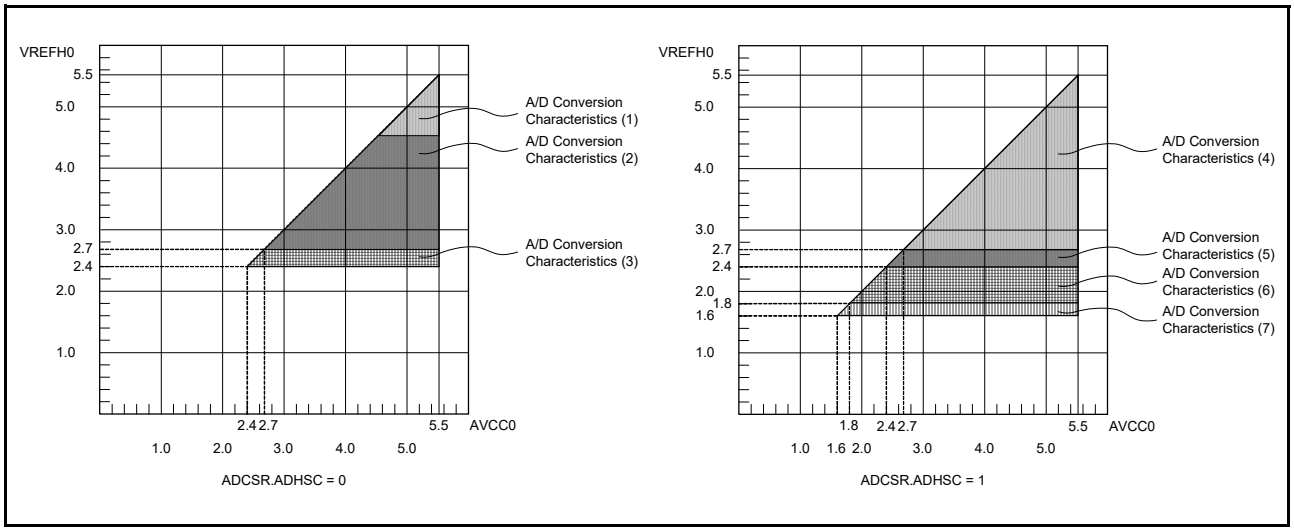

Figure 2.80 AVCC0 to VREFH0 voltage range

Table 2.48 A/D conversion characteristics (1) in high-speed A/D conversion mode (1 of 2)

Conditions: VCC = AVCC0 = 4.5 to 5.5 V, VREFH0 = 4.5 to 5.5 V
Reference voltage range applied to the VREFH0 and VREFL0.

Parameter		Min	Typ	Max	Unit	Test conditions
Frequency		1	-	64	MHz	-
Analog input capacitance*2	Cs	-	-	8 (reference data)	pF	High-precision channel
		-	-	9 (reference data)	pF	Normal-precision channel
Analog input resistance	Rs	-	-	2.5 (reference data)	kΩ	High-precision channel
		-	-	6.7 (reference data)	kΩ	Normal-precision channel
Analog input voltage range	Ain	0	-	VREFH0	V	-
12-bit mode						
Resolution		-	-	12	Bit	-
Conversion time*1 (Operation at PCLKC = 64 MHz)	Permissible signal source impedance Max. = 0.3 kΩ	0.70	-	-	μs	High-precision channel ADCSR.ADHSC = 0 ADSSTRn.SST[7:0] = 0Dh
		1.13	-	-	μs	Normal-precision channel ADCSR.ADHSC = 0 ADSSTRn.SST[7:0] = 28h
Offset error		-	±0.5	±4.5	LSB	High-precision channel
				±6.0	LSB	Other than above
Full-scale error		-	±0.75	±4.5	LSB	High-precision channel
				±6.0	LSB	Other than above
Quantization error		-	±0.5	-	LSB	-
Absolute accuracy		-	±1.25	±5.0	LSB	High-precision channel
				±8.0	LSB	Other than above
DNL differential nonlinearity error		-	±1.0	-	LSB	-
INL integral nonlinearity error		-	±1.0	±3.0	LSB	-
14-bit mode						
Resolution		-	-	14	Bit	-

Table 2.48 A/D conversion characteristics (1) in high-speed A/D conversion mode (2 of 2)
Conditions: VCC = AVCC0 = 4.5 to 5.5 V, VREFH0 = 4.5 to 5.5 V
Reference voltage range applied to the VREFH0 and VREFL0.

Parameter		Min	Typ	Max	Unit	Test conditions
Conversion time*1 (Operation at PCLKC = 64 MHz)	Permissible signal source impedance Max. = 0.3 kΩ	0.80	-	-	μs	High-precision channel ADCSR.ADHSC = 0 ADSSTRn.SST[7:0] = 0Dh
		1.22	-	-	μs	Normal-precision channel ADCSR.ADHSC = 0 ADSSTRn.SST[7:0] = 28h
Offset error		-	±2.0	±18	LSB	High-precision channel
				±24.0	LSB	Other than above
Full-scale error		-	±3.0	±18	LSB	High-precision channel
				±24.0	LSB	Other than above
Quantization error		-	±0.5	-	LSB	-
Absolute accuracy		-	±5.0	±20	LSB	High-precision channel
				±32.0	LSB	Other than above
DNL differential nonlinearity error		-	±4.0	-	LSB	-
INL integral nonlinearity error		-	±4.0	±12.0	LSB	-

Note: The characteristics apply when no pin functions other than 14-bit A/D converter input are used. Absolute accuracy does not include quantization errors. Offset error, full-scale error, DNL differential nonlinearity error, and INL integral nonlinearity error do not include quantization errors.
Note 1. The conversion time is the sum of the sampling time and the comparison time. The number of sampling states is indicated for the test conditions.
Note 2. Except for I/O input capacitance (Cin), see section 2.2.4, I/O V_{OH}, V_{OL}, and Other Characteristics.

Table 2.49 A/D conversion characteristics (2) in high-speed A/D conversion mode (1 of 2)
Conditions: VCC = AVCC0 = 2.7 to 5.5 V, VREFH0 = 2.7 to 5.5 V
Reference voltage range applied to the VREFH0 and VREFL0.

Parameter		Min	Typ	Max	Unit	Test conditions
Frequency		1	-	48	MHz	-
Analog input capacitance*2	Cs	-	-	8 (reference data)	pF	High-precision channel
		-	-	9 (reference data)	pF	Normal-precision channel
Analog input resistance	Rs	-	-	2.5 (reference data)	kΩ	High-precision channel
		-	-	6.7 (reference data)	kΩ	Normal-precision channel
Analog input voltage range	Ain	0	-	VREFH0	V	-
12-bit mode						
Resolution		-	-	12	Bit	-
Conversion time*1 (Operation at PCLKC = 48 MHz)	Permissible signal source impedance Max. = 0.3 kΩ	0.94	-	-	μs	High-precision channel ADCSR.ADHSC = 0 ADSSTRn.SST[7:0] = 0Dh
		1.50	-	-	μs	Normal-precision channel ADCSR.ADHSC = 0 ADSSTRn.SST[7:0] = 28h
Offset error		-	±0.5	±4.5	LSB	High-precision channel
				±6.0	LSB	Other than above
Full-scale error		-	±0.75	±4.5	LSB	High-precision channel
				±6.0	LSB	Other than above
Quantization error		-	±0.5	-	LSB	-
Absolute accuracy		-	±1.25	±5.0	LSB	High-precision channel
				±8.0	LSB	Other than above
DNL differential nonlinearity error		-	±1.0	-	LSB	-
INL integral nonlinearity error		-	±1.0	±3.0	LSB	-

Table 2.49 A/D conversion characteristics (2) in high-speed A/D conversion mode (2 of 2)
Conditions: VCC = AVCC0 = 2.7 to 5.5 V, VREFH0 = 2.7 to 5.5 V
Reference voltage range applied to the VREFH0 and VREFL0.

Parameter		Min	Typ	Max	Unit	Test conditions
14-bit mode						
Resolution		-	-	14	Bit	-
Conversion time*1 (Operation at PCLKC = 48 MHz)	Permissible signal source impedance Max. = 0.3 kΩ	1.06	-	-	μs	High-precision channel ADCSR.ADHSC = 0 ADSSTRn.SST[7:0] = 0Dh
		1.63	-	-	μs	Normal-precision channel ADCSR.ADHSC = 0 ADSSTRn.SST[7:0] = 28h
Offset error		-	±2.0	±18	LSB	High-precision channel
				±24.0	LSB	Other than above
Full-scale error		-	±3.0	±18	LSB	High-precision channel
				±24.0	LSB	Other than above
Quantization error		-	±0.5	-	LSB	-
Absolute accuracy		-	±5.0	±20	LSB	High-precision channel
				±32.0	LSB	Other than above
DNL differential nonlinearity error		-	±4.0	-	LSB	-
INL integral nonlinearity error		-	±4.0	±12.0	LSB	-

Note: The characteristics apply when no pin functions other than 14-bit A/D converter input are used. Absolute accuracy does not include quantization errors. Offset error, full-scale error, DNL differential nonlinearity error, and INL integral nonlinearity error do not include quantization errors.
Note 1. The conversion time is the sum of the sampling time and the comparison time. The number of sampling states is indicated for the test conditions.
Note 2. Except for I/O input capacitance (Cin), see section 2.2.4, I/O V_{OH}, V_{OL}, and Other Characteristics.

Table 2.50 A/D conversion characteristics (3) in high-speed A/D conversion mode (1 of 2)
Conditions: VCC = AVCC0 = 2.4 to 5.5 V, VREFH0 = 2.4 to 5.5 V
Reference voltage range applied to the VREFH0 and VREFL0.

Parameter		Min	Typ	Max	Unit	Test conditions
Frequency		1	-	32	MHz	-
Analog input capacitance*2	Cs	-	-	8 (reference data)	pF	High-precision channel
		-	-	9 (reference data)	pF	Normal-precision channel
Analog input resistance	Rs	-	-	2.5 (reference data)	kΩ	High-precision channel
		-	-	6.7 (reference data)	kΩ	Normal-precision channel
Analog input voltage range	Ain	0	-	VREFH0	V	-
12-bit mode						
Resolution		-	-	12	Bit	-
Conversion time*1 (Operation at PCLKC = 32 MHz)	Permissible signal source impedance Max. = 1.3 kΩ	1.41	-	-	μs	High-precision channel ADCSR.ADHSC = 0 ADSSTRn.SST[7:0] = 0Dh
		2.25	-	-	μs	Normal-precision channel ADCSR.ADHSC = 0 ADSSTRn.SST[7:0] = 28h
Offset error		-	±0.5	±4.5	LSB	High-precision channel
				±6.0	LSB	Other than above
Full-scale error		-	±0.75	±4.5	LSB	High-precision channel
				±6.0	LSB	Other than above
Quantization error		-	±0.5	-	LSB	-
Absolute accuracy		-	±1.25	±5.0	LSB	High-precision channel
				±8.0	LSB	Other than above

Table 2.50 A/D conversion characteristics (3) in high-speed A/D conversion mode (2 of 2)
Conditions: VCC = AVCC0 = 2.4 to 5.5 V, VREFH0 = 2.4 to 5.5 V
Reference voltage range applied to the VREFH0 and VREFL0.

Parameter		Min	Typ	Max	Unit	Test conditions
DNL differential nonlinearity error		-	±1.0	-	LSB	-
INL integral nonlinearity error		-	±1.0	±3.0	LSB	-
14-bit mode						
Resolution		-	-	14	Bit	-
Conversion time*1 (Operation at PCLKC = 32 MHz)	Permissible signal source impedance Max. = 1.3 kΩ	1.59	-	-	μs	High-precision channel ADCSR.ADHSC = 0 ADSSTRn.SST[7:0] = 0Dh
		2.44	-	-	μs	Normal-precision channel ADCSR.ADHSC = 0 ADSSTRn.SST[7:0] = 28h
Offset error		-	±2.0	±18	LSB	High-precision channel
				±24.0	LSB	Other than above
Full-scale error		-	±3.0	±18	LSB	High-precision channel
				±24.0	LSB	Other than above
Quantization error		-	±0.5	-	LSB	-
Absolute accuracy		-	±5.0	±20	LSB	High-precision channel
				±32.0	LSB	Other than above
DNL differential nonlinearity error		-	±4.0	-	LSB	-
INL integral nonlinearity error		-	±4.0	±12.0	LSB	-

Note: The characteristics apply when no pin functions other than 14-bit A/D converter input are used. Absolute accuracy does not include quantization errors. Offset error, full-scale error, DNL differential nonlinearity error, and INL integral nonlinearity error do not include quantization errors.
Note 1. The conversion time is the sum of the sampling time and the comparison time. The number of sampling states is indicated for the test conditions.
Note 2. Except for I/O input capacitance (Cin), see section 2.2.4, I/O V_{OH}, V_{OL}, and Other Characteristics.

Table 2.51 A/D conversion characteristics (4) in low power A/D conversion mode (1 of 2)
Conditions: VCC = AVCC0 = 2.7 to 5.5 V, VREFH0 = 2.7 to 5.5 V
Reference voltage range applied to the VREFH0 and VREFL0.

Parameter		Min	Typ	Max	Unit	Test conditions
Frequency		1	-	24	MHz	-
Analog input capacitance*2	Cs	-	-	8 (reference data)	pF	High-precision channel
		-	-	9 (reference data)	pF	Normal-precision channel
Analog input resistance	Rs	-	-	2.5 (reference data)	kΩ	High-precision channel
		-	-	6.7 (reference data)	kΩ	Normal-precision channel
Analog input voltage range	Ain	0	-	VREFH0	V	-
12-bit mode						
Resolution		-	-	12	Bit	-
Conversion time*1 (Operation at PCLKC = 24 MHz)	Permissible signal source impedance Max. = 1.1 kΩ	2.25	-	-	μs	High-precision channel ADCSR.ADHSC = 1 ADSSTRn.SST[7:0] = 0Dh
		3.38	-	-	μs	Normal-precision channel ADCSR.ADHSC = 1 ADSSTRn.SST[7:0] = 28h
Offset error		-	±0.5	±4.5	LSB	High-precision channel
				±6.0	LSB	Other than above
Full-scale error		-	±0.75	±4.5	LSB	High-precision channel
				±6.0	LSB	Other than above
Quantization error		-	±0.5	-	LSB	-

Table 2.51 A/D conversion characteristics (4) in low power A/D conversion mode (2 of 2)
Conditions: VCC = AVCC0 = 2.7 to 5.5 V, VREFH0 = 2.7 to 5.5 V
Reference voltage range applied to the VREFH0 and VREFL0.

Parameter		Min	Typ	Max	Unit	Test conditions
Absolute accuracy		-	±1.25	±5.0	LSB	High-precision channel
				±8.0	LSB	Other than above
DNL differential nonlinearity error		-	±1.0	-	LSB	-
INL integral nonlinearity error		-	±1.0	±3.0	LSB	-
14-bit mode						
Resolution		-	-	14	Bit	-
Conversion time*1 (Operation at PCLKC = 24 MHz)	Permissible signal source impedance Max. = 1.1 kΩ	2.50	-	-	μs	High-precision channel ADCSR.ADHSC = 1 ADSSTRn.SST[7:0] = 0Dh
		3.63	-	-	μs	Normal-precision channel ADCSR.ADHSC = 1 ADSSTRn.SST[7:0] = 28h
Offset error		-	±2.0	±18	LSB	High-precision channel
				±24.0	LSB	Other than above
Full-scale error		-	±3.0	±18	LSB	High-precision channel
				±24.0	LSB	Other than above
Quantization error		-	±0.5	-	LSB	-
Absolute accuracy		-	±5.0	±20	LSB	High-precision channel
				±32.0	LSB	Other than above
DNL differential nonlinearity error		-	±4.0	-	LSB	-
INL integral nonlinearity error		-	±4.0	±12.0	LSB	-

Note: The characteristics apply when no pin functions other than 14-bit A/D converter input are used. Absolute accuracy does not include quantization errors. Offset error, full-scale error, DNL differential nonlinearity error, and INL integral nonlinearity error do not include quantization errors.
Note 1. The conversion time is the sum of the sampling time and the comparison time. The number of sampling states is indicated for the test conditions.
Note 2. Except for I/O input capacitance (Cin), see section 2.2.4, I/O V_{OH}, V_{OL}, and Other Characteristics.

Table 2.52 A/D conversion characteristics (5) in low power A/D conversion mode (1 of 2)
Conditions: VCC = AVCC0 = 2.4 to 5.5 V, VREFH0 = 2.4 to 5.5 V
Reference voltage range applied to the VREFH0 and VREFL0.

Parameter		Min	Typ	Max	Unit	Test conditions
Frequency		1	-	16	MHz	-
Analog input capacitance*2	Cs	-	-	8 (reference data)	pF	High-precision channel
		-	-	9 (reference data)	pF	Normal-precision channel
Analog input resistance	Rs	-	-	2.5 (reference data)	kΩ	High-precision channel
		-	-	6.7 (reference data)	kΩ	Normal-precision channel
Analog input voltage range	Ain	0	-	VREFH0	V	-
12-bit mode						
Resolution		-	-	12	Bit	-
Conversion time*1 (Operation at PCLKC = 16 MHz)	Permissible signal source impedance Max. = 2.2 kΩ	3.38	-	-	μs	High-precision channel ADCSR.ADHSC = 1 ADSSTRn.SST[7:0] = 0Dh
		5.06	-	-	μs	Normal-precision channel ADCSR.ADHSC = 1 ADSSTRn.SST[7:0] = 28h
Offset error		-	±0.5	±4.5	LSB	High-precision channel
				±6.0	LSB	Other than above

Table 2.52 A/D conversion characteristics (5) in low power A/D conversion mode (2 of 2)
Conditions: VCC = AVCC0 = 2.4 to 5.5 V, VREFH0 = 2.4 to 5.5 V
Reference voltage range applied to the VREFH0 and VREFL0.

Parameter		Min	Typ	Max	Unit	Test conditions
Full-scale error		-	±0.75	±4.5	LSB	High-precision channel
				±6.0	LSB	Other than above
Quantization error		-	±0.5	-	LSB	-
Absolute accuracy		-	±1.25	±5.0	LSB	High-precision channel
				±8.0	LSB	Other than above
DNL differential nonlinearity error		-	±1.0	-	LSB	-
INL integral nonlinearity error		-	±1.0	±3.0	LSB	-
14-bit mode						
Resolution		-	-	14	Bit	-
Conversion time*1 (Operation at PCLKC = 16 MHz)	Permissible signal source impedance Max. = 2.2 kΩ	3.75	-	-	μs	High-precision channel ADCSR.ADHSC = 1 ADSSTRn.SST[7:0] = 0Dh
		5.44	-	-	μs	Normal-precision channel ADCSR.ADHSC = 1 ADSSTRn.SST[7:0] = 28h
Offset error		-	±2.0	±18	LSB	High-precision channel
				±24.0	LSB	Other than above
Full-scale error		-	±3.0	±18	LSB	High-precision channel
				±24.0	LSB	Other than above
Quantization error		-	±0.5	-	LSB	-
Absolute accuracy		-	±5.0	±20	LSB	High-precision channel
				±32.0	LSB	Other than above
DNL differential nonlinearity error		-	±4.0	-	LSB	-
INL integral nonlinearity error		-	±4.0	±12.0	LSB	-

Note: The characteristics apply when no pin functions other than 14-bit A/D converter input are used. Absolute accuracy does not include quantization errors. Offset error, full-scale error, DNL differential nonlinearity error, and INL integral nonlinearity error do not include quantization errors.
Note 1. The conversion time is the sum of the sampling time and the comparison time. The number of sampling states is indicated for the test conditions.
Note 2. Except for I/O input capacitance (Cin), see section 2.2.4, I/O V_{OH}, V_{OL}, and Other Characteristics.

Table 2.53 A/D conversion characteristics (6) in low power A/D conversion mode (1 of 2)
Conditions: VCC = AVCC0 = 1.8 to 5.5 V (AVCC0 = VCC when VCC < 2.0 V), VREFH0 = 1.8 to 5.5 V
Reference voltage range applied to the VREFH0 and VREFL0.

Parameter		Min	Typ	Max	Unit	Test conditions
Frequency		1	-	8	MHz	-
Analog input capacitance*2	Cs	-	-	8 (reference data)	pF	High-precision channel
		-	-	9 (reference data)	pF	Normal-precision channel
Analog input resistance	Rs	-	-	3.8 (reference data)	kΩ	High-precision channel
		-	-	8.2 (reference data)	kΩ	Normal-precision channel
Analog input voltage range	Ain	0	-	VREFH0	V	-
12-bit mode						
Resolution		-	-	12	Bit	-

Table 2.53 A/D conversion characteristics (6) in low power A/D conversion mode (2 of 2)
Conditions: VCC = AVCC0 = 1.8 to 5.5 V (AVCC0 = VCC when VCC < 2.0 V), VREFH0 = 1.8 to 5.5 V
Reference voltage range applied to the VREFH0 and VREFL0.

Parameter		Min	Typ	Max	Unit	Test conditions
Conversion time*1 (Operation at PCLKC = 8 MHz)	Permissible signal source impedance Max. = 5 kΩ	6.75	-	-	μs	High-precision channel ADCSR.ADHSC = 1 ADSSTRn.SST[7:0] = 0Dh
		10.13	-	-	μs	Normal-precision channel ADCSR.ADHSC = 1 ADSSTRn.SST[7:0] = 28h
Offset error		-	±1.0	±7.5	LSB	High-precision channel
				±10.0	LSB	Other than above
Full-scale error		-	±1.5	±7.5	LSB	High-precision channel
				±10.0	LSB	Other than above
Quantization error		-	±0.5	-	LSB	-
Absolute accuracy		-	±3.0	±8.0	LSB	High-precision channel
				±12.0	LSB	Other than above
DNL differential nonlinearity error		-	±1.0	-	LSB	-
INL integral nonlinearity error		-	±1.0	±3.0	LSB	-
14-bit mode						
Resolution		-	-	14	Bit	-
Conversion time*1 (Operation at PCLKC = 8 MHz)	Permissible signal source impedance Max. = 5 kΩ	7.50	-	-	μs	High-precision channel ADCSR.ADHSC = 1 ADSSTRn.SST[7:0] = 0Dh
		10.88	-	-	μs	Normal-precision channel ADCSR.ADHSC = 1 ADSSTRn.SST[7:0] = 28h
Offset error		-	±4.0	±30.0	LSB	High-precision channel
				±40.0	LSB	Other than above
Full-scale error		-	±6.0	±30.0	LSB	High-precision channel
				±40.0	LSB	Other than above
Quantization error		-	±0.5	-	LSB	-
Absolute accuracy		-	±12.0	±32.0	LSB	High-precision channel
				±48.0	LSB	Other than above
DNL differential nonlinearity error		-	±4.0	-	LSB	-
INL integral nonlinearity error		-	±4.0	±12.0	LSB	-

Note: The characteristics apply when no pin functions other than 14-bit A/D converter input are used. Absolute accuracy does not include quantization errors. Offset error, full-scale error, DNL differential nonlinearity error, and INL integral nonlinearity error do not include quantization errors.

Note 1. The conversion time is the sum of the sampling time and the comparison time. The number of sampling states is indicated for the test conditions.

Note 2. Except for I/O input capacitance (Cin), see section 2.2.4, I/O V_{OH}, V_{OL}, and Other Characteristics.

Table 2.54 A/D conversion characteristics (7) in low power A/D conversion mode

Conditions: VCC = AVCC0 = 1.6 to 5.5 V (AVCC0 = VCC when VCC < 2.0 V), VREFH0 = 1.6 to 5.5 V
Reference voltage range applied to the VREFH0 and VREFL0.

Parameter		Min	Typ	Max	Unit	Test conditions
Frequency		1	-	4	MHz	-
Analog input capacitance*2	Cs	-	-	8 (reference data)	pF	High-precision channel
		-	-	9 (reference data)	pF	Normal-precision channel
Analog input resistance	Rs	-	-	13.1 (reference data)	kΩ	High-precision channel
		-	-	14.3 (reference data)	kΩ	Normal-precision channel
Analog input voltage range	Ain	0	-	VREFH0	V	-
12-bit mode						
Resolution		-	-	12	Bit	-
Conversion time*1 (Operation at PCLKC = 4 MHz)	Permissible signal source impedance Max. = 9.9 kΩ	13.5	-	-	μs	High-precision channel ADCSR.ADHSC = 1 ADSSTRn.SST[7:0] = 0Dh
		20.25	-	-	μs	Normal-precision channel ADCSR.ADHSC = 1 ADSSTRn.SST[7:0] = 28h
Offset error		-	±1.0	±7.5	LSB	High-precision channel
				±10.0	LSB	Other than above
Full-scale error		-	±1.5	±7.5	LSB	High-precision channel
				±10.0	LSB	Other than above
Quantization error		-	±0.5	-	LSB	-
Absolute accuracy		-	±3.0	±8.0	LSB	High-precision channel
				±12.0	LSB	Other than above
DNL differential nonlinearity error		-	±1.0	-	LSB	-
INL integral nonlinearity error		-	±1.0	±3.0	LSB	-
14-bit mode						
Resolution		-	-	14	Bit	-
Conversion time*1 (Operation at PCLKC = 4 MHz)	Permissible signal source impedance Max. = 9.9 kΩ	15.0	-	-	μs	High-precision channel ADCSR.ADHSC = 1 ADSSTRn.SST[7:0] = 0Dh
		21.75	-	-	μs	Normal-precision channel ADCSR.ADHSC = 1 ADSSTRn.SST[7:0] = 28h
Offset error		-	±4.0	±30.0	LSB	High-precision channel
				±40.0	LSB	Other than above
Full-scale error		-	±6.0	±30.0	LSB	High-precision channel
				±40.0	LSB	Other than above
Quantization error		-	±0.5	-	LSB	-
Absolute accuracy		-	±12.0	±32.0	LSB	High-precision channel
				±48.0	LSB	Other than above
DNL differential nonlinearity error		-	±4.0	-	LSB	-
INL integral nonlinearity error		-	±4.0	±12.0	LSB	-

Note: The characteristics apply when no pin functions other than 14-bit A/D converter input are used. Absolute accuracy does not include quantization errors. Offset error, full-scale error, DNL differential nonlinearity error, and INL integral nonlinearity error do not include quantization errors.

Note 1. The conversion time is the sum of the sampling time and the comparison time. The number of sampling states is indicated for the test conditions.

Note 2. Except for I/O input capacitance (Cin), see section 2.2.4, I/O V_{OH}, V_{OL}, and Other Characteristics.

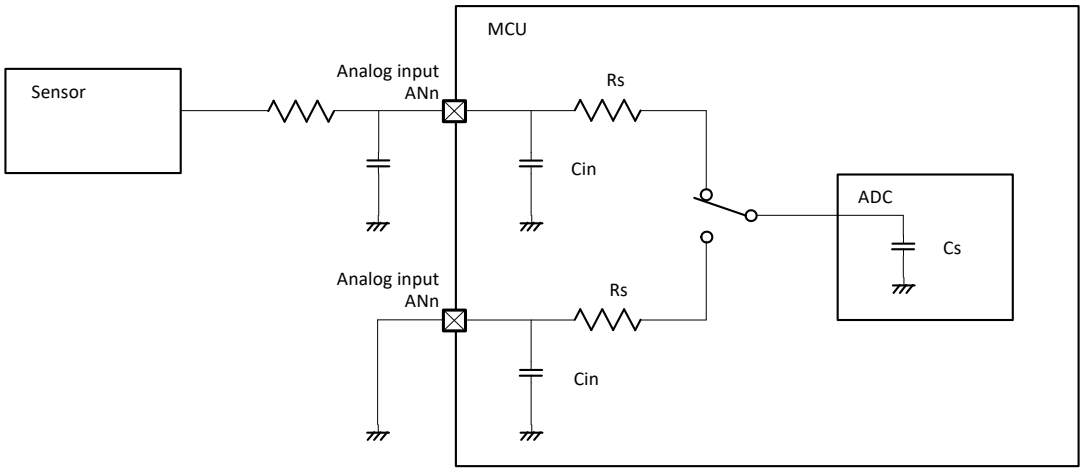

Figure 2.81 Equivalent circuit for analog input

Table 2.55 14-bit A/D converter channel classification

Classification	Channel	Conditions	Remarks
High-precision channel	AN000 to AN015	AVCC0 = 1.6 to 5.5 V	Pins AN000 to AN015 cannot be used as general I/O, IRQ2, IRQ3 inputs, and TS transmission, when the A/D converter is in use
Normal-precision channel	AN016 to AN027		
Internal reference voltage input channel	Internal reference voltage	AVCC0 = 2.0 to 5.5 V	-
Temperature sensor input channel	Temperature sensor output	AVCC0 = 2.0 to 5.5 V	-

Table 2.56 A/D internal reference voltage characteristics

Conditions: VCC = AVCC0 = VREFH0 = 2.0 to 5.5 V*1

Parameter	Min	Typ	Max	Unit	Test conditions
Internal reference voltage input channel*2	1.36	1.43	1.50	V	-
Frequency*3	1	-	2	MHz	-
Sampling time*4	5.0	-	-	μs	-

Note 1. The internal reference voltage cannot be selected for input channels when AVCC0 < 2.0 V.
Note 2. The 14-bit A/D internal reference voltage indicates the voltage when the internal reference voltage is input to the 14-bit A/D converter.
Note 3. This is a parameter for ADC14 when the internal reference voltage is used as the high-potential reference voltage.
Note 4. This is a parameter for ADC14 when the internal reference voltage is selected for an analog input channel in ADC14.

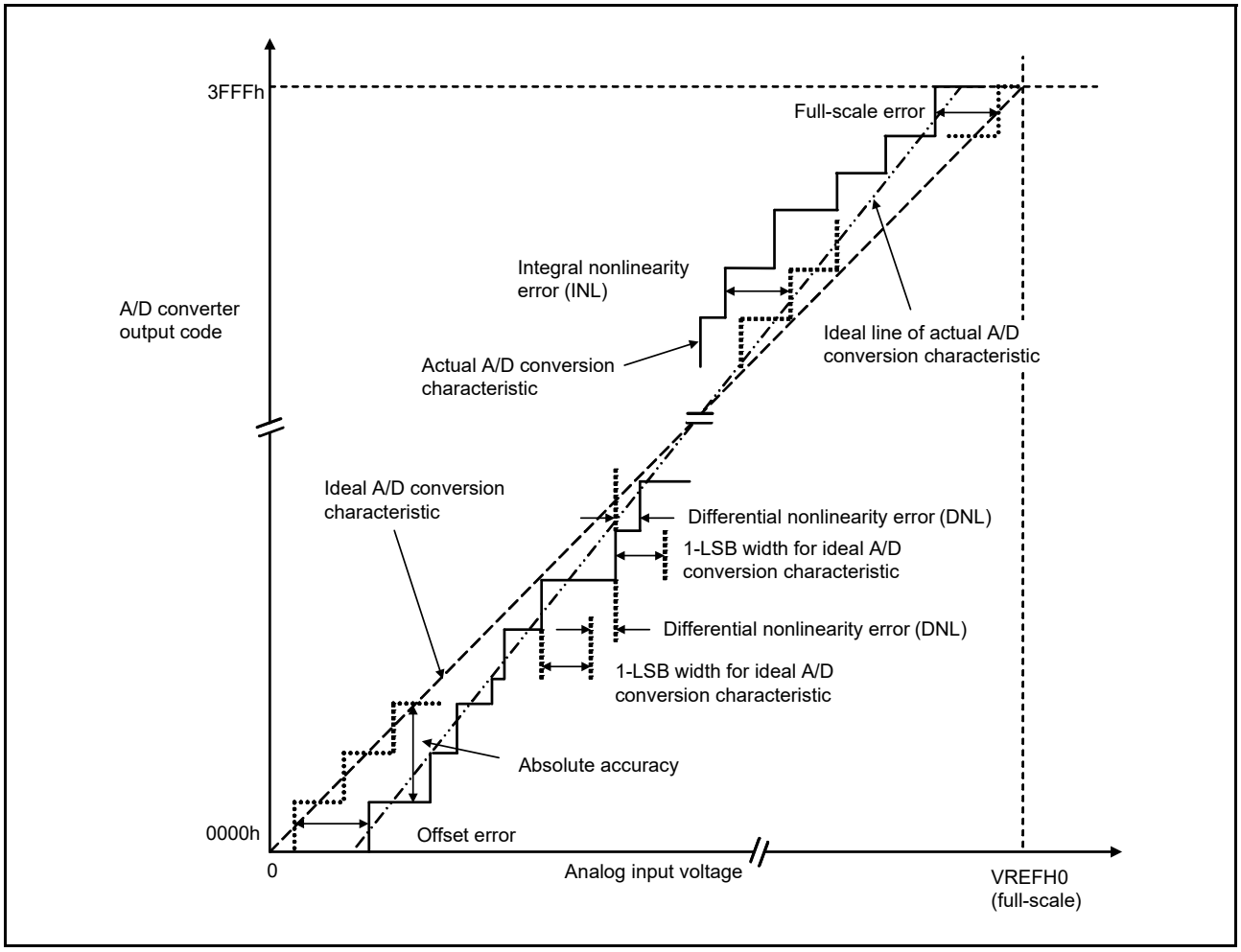

Figure 2.82 Illustration of 14-bit A/D converter characteristic terms

Absolute accuracy

Absolute accuracy is the difference between output code based on the theoretical A/D conversion characteristics, and the actual A/D conversion result. When measuring absolute accuracy, the voltage at the midpoint of the width of analog input voltage (1-LSB width), which can meet the expectation of outputting an equal code based on the theoretical A/D conversion characteristics, is used as the analog input voltage. For example, if 12-bit resolution is used and the reference voltage VREFH0 = 3.072 V, then 1-LSB width becomes 0.75 mV, and 0 mV, 0.75 mV, and 1.5 mV are used as the analog input voltages. If analog input voltage is 6 mV, an absolute accuracy of ±5 LSB means that the actual A/D conversion result is in the range of 003h to 00Dh, though an output code of 008h can be expected from the theoretical A/D conversion characteristics.

Integral nonlinearity error (INL)

Integral nonlinearity error is the maximum deviation between the ideal line when the measured offset and full-scale errors are zeroed, and the actual output code.

Differential nonlinearity error (DNL)

Differential nonlinearity error is the difference between 1-LSB width based on the ideal A/D conversion characteristics and the width of the actually output code.

Offset error

Offset error is the difference between the transition point of the ideal first output code and the actual first output code.

Full-scale error

Full-scale error is the difference between the transition point of the ideal last output code and the actual last output code.

2.6 DAC12 Characteristics

Table 2.57 D/A conversion characteristics (1)
Conditions: VCC = AVCC0 = 1.8 to 5.5 V
Reference voltage = VREFH or VREFL selected

Parameter	Min	Typ	Max	Unit	Test conditions
Resolution	-	-	12	bit	-
Resistive load	30	-	-	kΩ	-
Capacitive load	-	-	50	pF	-
Output voltage range	0.35	-	AVCC0 – 0.47	V	-
DNL differential nonlinearity error	-	±0.5	±1.0	LSB	-
INL integral nonlinearity error	-	±2.0	±8.0	LSB	-
Offset error	-	-	±20	mV	-
Full-scale error	-	-	±20	mV	-
Output impedance	-	5	-	Ω	-
Conversion time	-	-	30	μs	-

Table 2.58 D/A conversion characteristics (2)
Conditions: VCC = AVCC0 = 1.8 to 5.5 V
Reference voltage = AVCC0 or AVSS0 selected

Parameter	Min	Typ	Max	Unit	Test conditions
Resolution	-	-	12	bit	-
Resistive load	30	-	-	kΩ	-
Capacitive load	-	-	50	pF	-
Output voltage range	0.35	-	AVCC0 – 0.47	V	-
DNL differential nonlinearity error	-	±0.5	±2.0	LSB	-
INL integral nonlinearity error	-	±2.0	±8.0	LSB	-
Offset error	-	-	±30	mV	-
Full-scale error	-	-	±30	mV	-
Output impedance	-	5	-	Ω	-
Conversion time	-	-	30	μs	-

Table 2.59 D/A conversion characteristics (3)
Conditions: VCC = AVCC0 = 1.8 to 5.5 V
Reference voltage = internal reference voltage selected

Parameter	Min	Typ	Max	Unit	Test conditions
Resolution	-	-	12	bit	-
Internal reference voltage (Vbgr)	1.36	1.43	1.50	V	-
Resistive load	30	-	-	kΩ	-
Capacitive load	-	-	50	pF	-
Output voltage range	0.35	-	Vbgr	V	-
DNL differential nonlinearity error	-	±2.0	±16.0	LSB	-
INL integral nonlinearity error	-	±8.0	±16.0	LSB	-
Offset error	-	-	±30	mV	-
Output impedance	-	5	-	Ω	-
Conversion time	-	-	30	μs	-

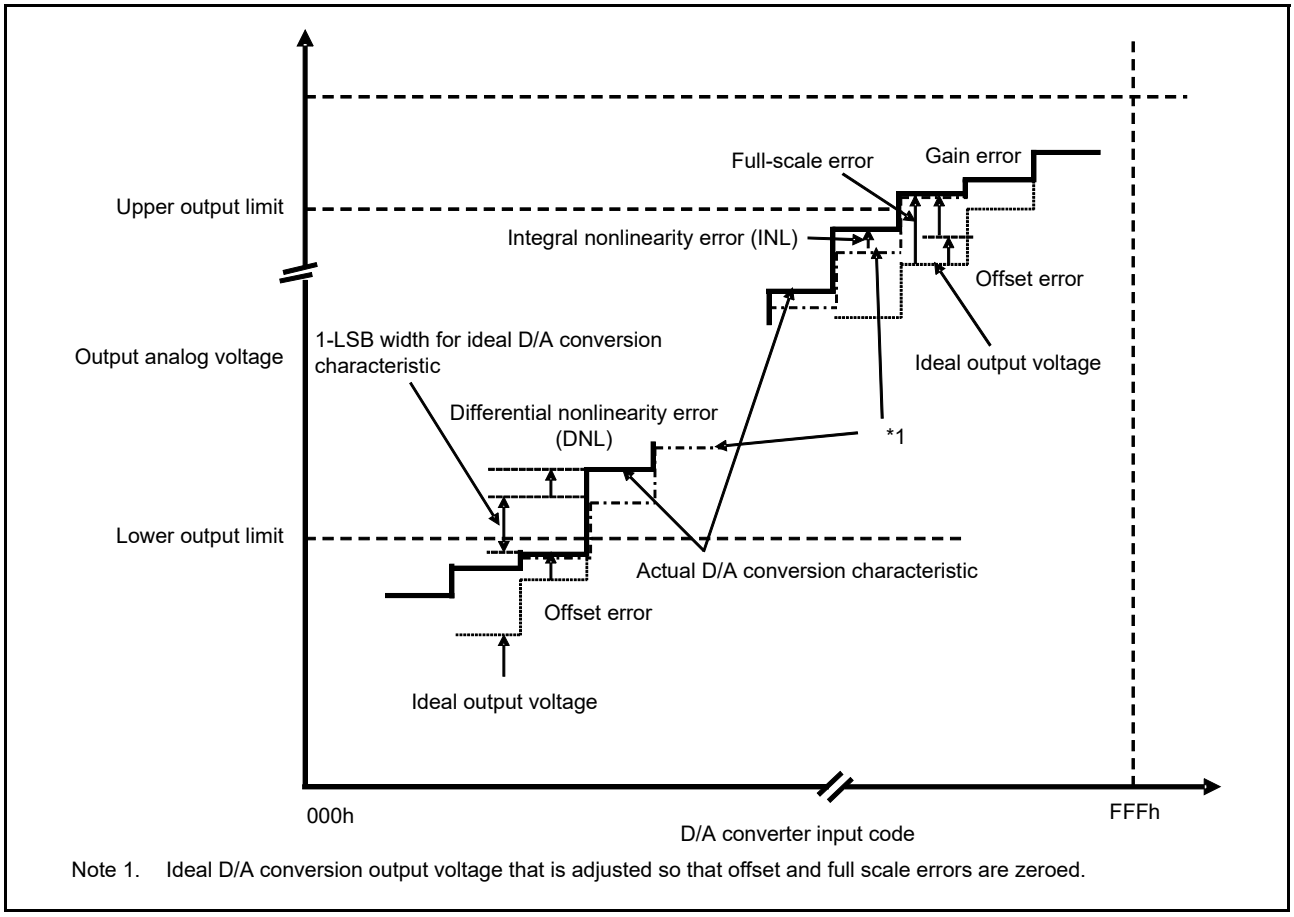

Note 1. Ideal D/A conversion output voltage that is adjusted so that offset and full scale errors are zeroed.

Figure 2.83 Illustration of D/A converter characteristic terms

Integral nonlinearity error (INL)

Integral nonlinearity error is the maximum deviation between the ideal output voltage based on the ideal conversion characteristic when the measured offset and full-scale errors are zeroed, and the actual output voltage.

Differential nonlinearity error (DNL)

Differential nonlinearity error is the difference between 1-LSB voltage width based on the ideal D/A conversion characteristics and the width of the actual output voltage.

Offset error

Offset error is the difference between the highest actual output voltage that falls below the lower output limit and the ideal output voltage based on the input code.

Full-scale error

Full-scale error is the difference between the lowest actual output voltage that exceeds the upper output limit and the ideal output voltage based on the input code.

2.7 TSN Characteristics

Table 2.60 TSN characteristics
Conditions: VCC = AVCC0 = 2.0 to 5.5 V

Parameter	Symbol	Min	Typ	Max	Unit	Test conditions
Relative accuracy	-	-	±1.5	-	°C	2.4 V or above
	-	-	±2.0	-	°C	Below 2.4 V
Temperature slope	-	-	-3.65	-	mV/°C	-
Output voltage (at 25°C)	-	-	1.05	-	V	VCC = 3.3 V
Temperature sensor start time	t_{START}	-	-	5	μs	-
Sampling time	-	5	-	-	μs	-

2.8 OSC Stop Detect Characteristics

Table 2.61 Oscillation stop detection circuit characteristics

Parameter	Symbol	Min	Typ	Max	Unit	Test conditions
Detection time	t_{dr}	-	-	1	ms	Figure 2.84

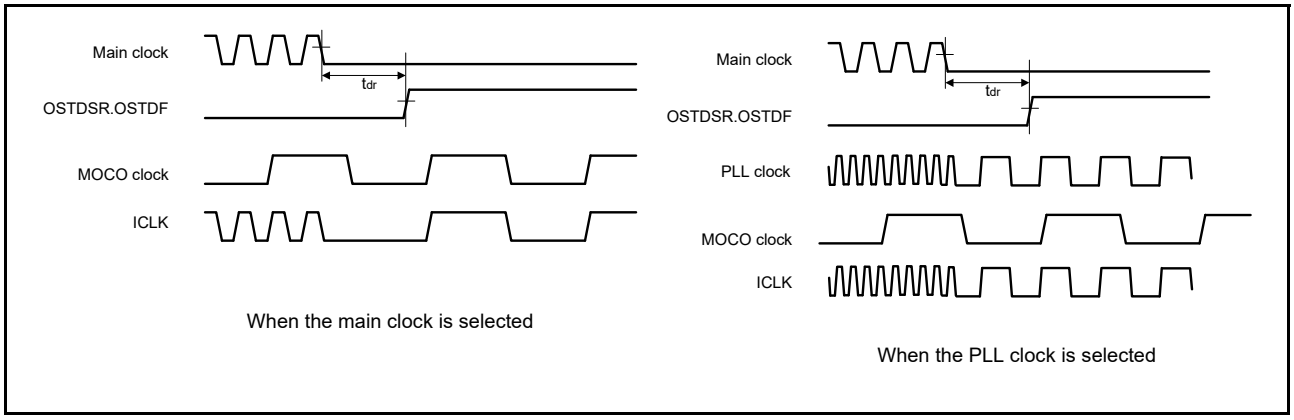

Figure 2.84 Oscillation stop detection timing

2.9 POR and LVD Characteristics

Table 2.62 Power-on reset circuit and voltage detection circuit characteristics (1)

Parameter		Symbol	Min	Typ	Max	Unit	Test conditions
Voltage detection level*1	Power-on reset (POR)	V_{POR}	1.27	1.42	1.57	V	Figure 2.85, Figure 2.86
	Voltage detection circuit (LVD0)*2	V_{det0_0}	3.68	3.85	4.00	V	Figure 2.87 At falling edge VCC
		V_{det0_1}	2.68	2.85	2.96		
		V_{det0_2}	2.38	2.53	2.64		
		V_{det0_3}	1.78	1.90	2.02		
		V_{det0_4}	1.60	1.69	1.82		
	Voltage detection circuit (LVD1)*3	V_{det1_0}	4.13	4.29	4.45	V	Figure 2.88 At falling edge VCC
		V_{det1_1}	3.98	4.16	4.30		
		V_{det1_2}	3.86	4.03	4.18		
		V_{det1_3}	3.68	3.86	4.00		
		V_{det1_4}	2.98	3.10	3.22		
		V_{det1_5}	2.89	3.00	3.11		
		V_{det1_6}	2.79	2.90	3.01		
		V_{det1_7}	2.68	2.79	2.90		
		V_{det1_8}	2.58	2.68	2.78		
		V_{det1_9}	2.48	2.58	2.68		
		V_{det1_A}	2.38	2.48	2.58		
		V_{det1_B}	2.10	2.20	2.30		
		V_{det1_C}	1.84	1.96	2.05		
		V_{det1_D}	1.74	1.86	1.95		
		V_{det1_E}	1.63	1.75	1.84		
		V_{det1_F}	1.60	1.65	1.73		
	Voltage detection circuit (LVD2)*4	V_{det2_0}	4.11	4.31	4.48	V	Figure 2.89 At falling edge VCC
		V_{det2_1}	3.97	4.17	4.34		
		V_{det2_2}	3.83	4.03	4.20		
		V_{det2_3}	3.64	3.84	4.01		

Note 1. These characteristics apply when noise is not superimposed on the power supply. When a setting causes this voltage detection level to overlap with that of the voltage detection circuit, it cannot be specified whether LVD1 or LVD2 is used for voltage detection.
Note 2. # in the symbol Vdet0_# denotes the value of the OFS1.VDSEL1[2:0] bits.
Note 3. # in the symbol Vdet1_# denotes the value of the LVDLVLR.LVD1LVL[4:0] bits.
Note 4. # in the symbol Vdet2_# denotes the value of the LVDLVLR.LVD2LVL[2:0] bits.

Table 2.63 Power-on reset circuit and voltage detection circuit characteristics (2)

Parameter		Symbol	Min	Typ	Max	Unit	Test conditions
Wait time after power-on reset cancellation	LVD0: enable	t_{POR}	-	1.7	-	ms	-
	LVD0: disable	t_{POR}	-	1.3	-	ms	-
Wait time after voltage monitor 0, 1, 2 reset cancellation	LVD0: enable*1	$t_{LVD0,1,2}$	-	0.6	-	ms	-
	LVD0: disable*2	$t_{LVD1,2}$	-	0.2	-	ms	-
Response delay*3		t_{det}	-	-	350	μs	Figure 2.85, Figure 2.86
Minimum VCC down time		t_{VOFF}	450	-	-	μs	Figure 2.85, VCC = 1.0 V or above
Power-on reset enable time		$t_{W(POR)}$	1	-	-	ms	Figure 2.86, VCC = below 1.0 V
LVD operation stabilization time (after LVD is enabled)		$t_{d(E-A)}$	-	-	300	μs	Figure 2.88, Figure 2.89
Hysteresis width (POR)		V_{PORH}	-	110	-	mV	-
Hysteresis width (LVD0, LVD1, and LVD2)		V_{LVH}	-	60	-	mV	LVD0 selected
			-	100	-		V_{det1_0} to V_{det1_2} selected
			-	60	-		V_{det1_3} to V_{det1_9} selected
			-	50	-		V_{det1_A} or V_{det1_B} selected
			-	40	-		V_{det1_C} or V_{det1_F} selected
			-	60	-		LVD2 selected

Note 1. When OFS1.LVDAS = 0.
Note 2. When OFS1.LVDAS = 1.
Note 3. The minimum VCC down time indicates the time when VCC is below the minimum value of voltage detection levels V_{POR}, V_{det0}, V_{det1}, and V_{det2} for the POR/LVD.

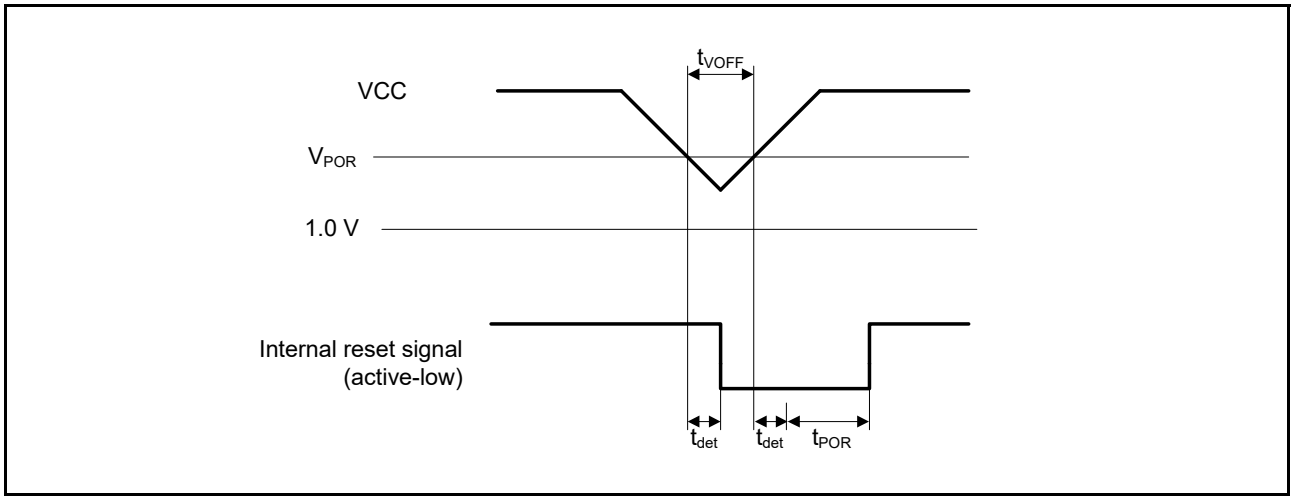

Figure 2.85 Voltage detection reset timing

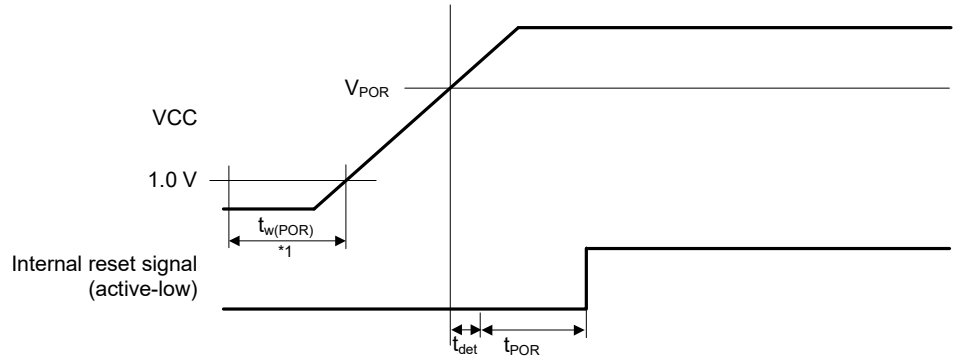

Note: $t_{W(POR)}$ is the time required for a power-on reset to be enabled while the external power VCC is being held below the valid voltage (1.0 V).
When VCC turns on, maintain $t_{W(POR)}$ for 1.0 ms or more.

Figure 2.86 Power-on reset timing

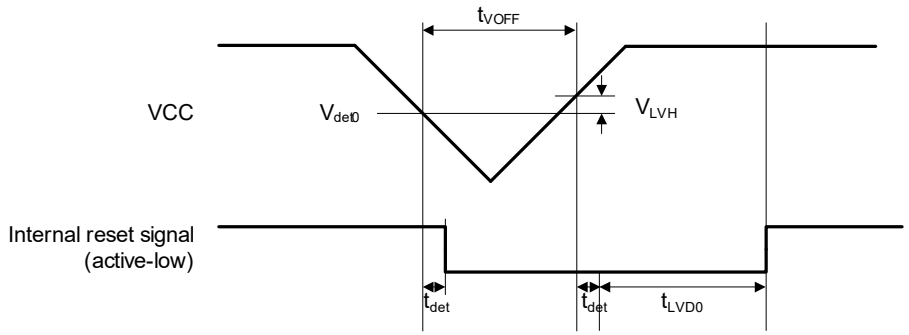

Figure 2.87 Voltage detection circuit timing (V_{det0})

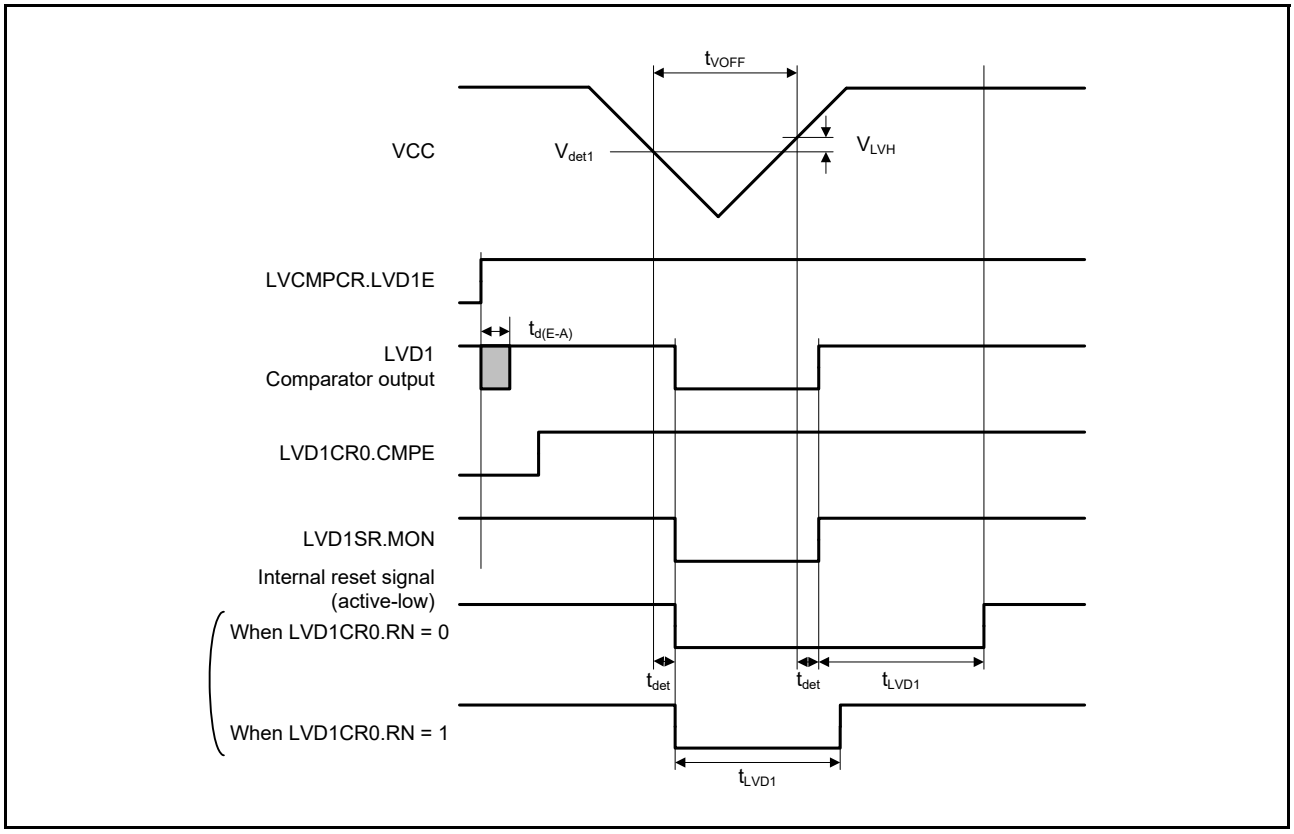

Figure 2.88 Voltage detection circuit timing (V_{det1})

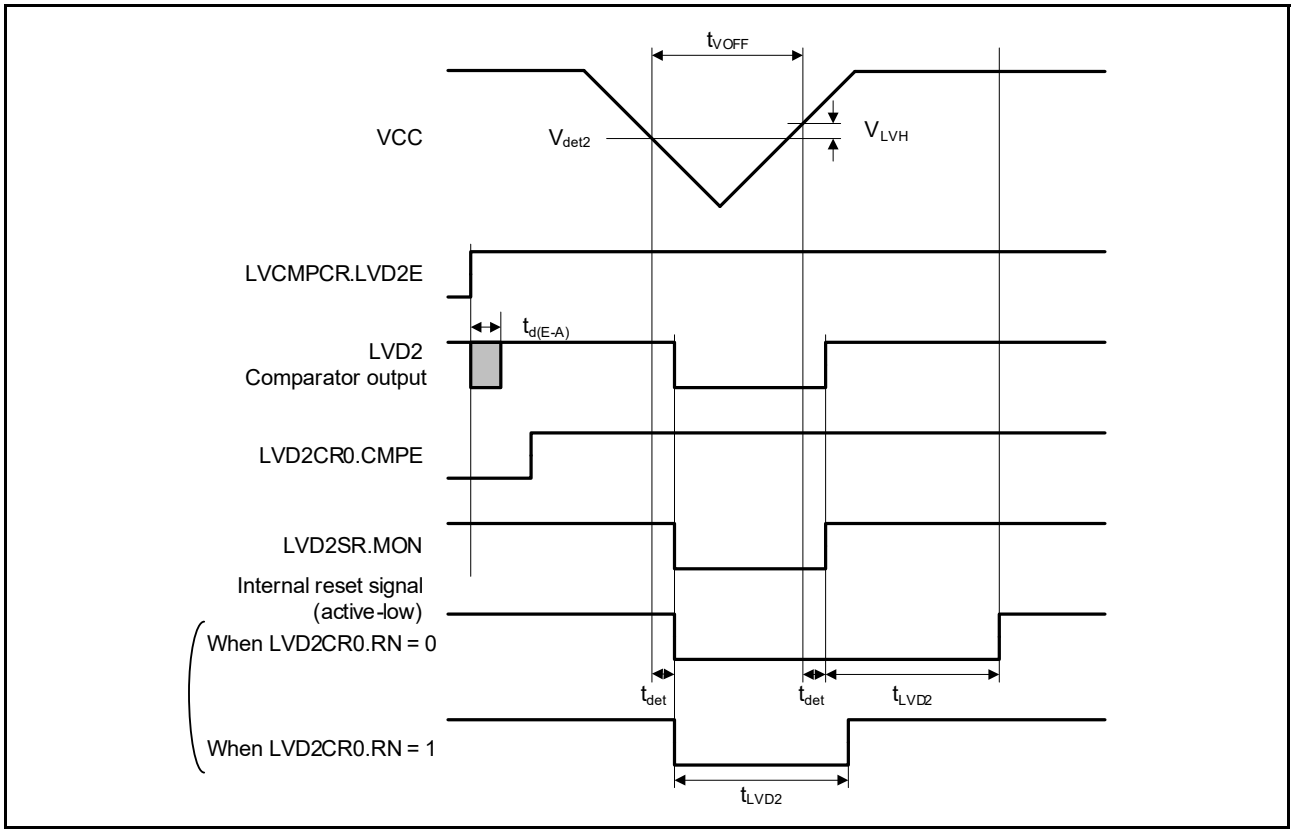

Figure 2.89 Voltage detection circuit timing (V_{det2})

2.10 VBATT Characteristics

Table 2.64 Battery backup function characteristics
Conditions: VCC = AVCC0 = 1.6 V to 5.5 V, VBATT = 1.6 to 3.6 V

Parameter		Symbol	Min	Typ	Max	Unit	Test conditions
Voltage level for switching to battery backup (falling)		$V_{DETBATT}$	1.99	2.09	2.19	V	Figure 2.90, Figure 2.91
Hysteresis width for switching to battery back up		V_{VBATTH}	-	100	-	mV	
VCC-off period for starting power supply switching		$t_{VOFFBATT}$	300	-	-	μs	-
Voltage detection level VBATT_Power-on reset (VBATT_POR)		$V_{VBATPOR}$	1.30	1.40	1.50	V	Figure 2.90, Figure 2.91
Wait time after VBATT_POR reset time cancellation		$t_{VBATPOR}$	-	-	3	mS	-
Level for detection of voltage drop on the VBATT pin (falling)	VBTLVDLVL[1:0] = 10b	$V_{DETBATLVD}$	2.11	2.2	2.29	V	Figure 2.92
	VBTLVDLVL[1:0] = 11b		1.92	2	2.08	V	
Hysteresis width for VBATT pin LVD		$V_{VBATLVDTH}$	-	50	-	mV	
VBATT pin LVD operation stabilization time		t_{d_vbat}	-	-	300	μs	Figure 2.92
VBATT pin LVD response delay time		t_{det_vbat}	-	-	350	μs	
Allowable voltage change rising/falling gradient		dt/dVCC	1.0	-	-	ms/V	-
VCC voltage level for access to the VBATT backup registers		$V_{_BKBATT}$	1.8	-	-	V	-

Note: The VCC-off period for starting power supply switching indicates the period in which VCC is below the minimum value of the voltage level for switching to battery backup ($V_{DETBATT}$).

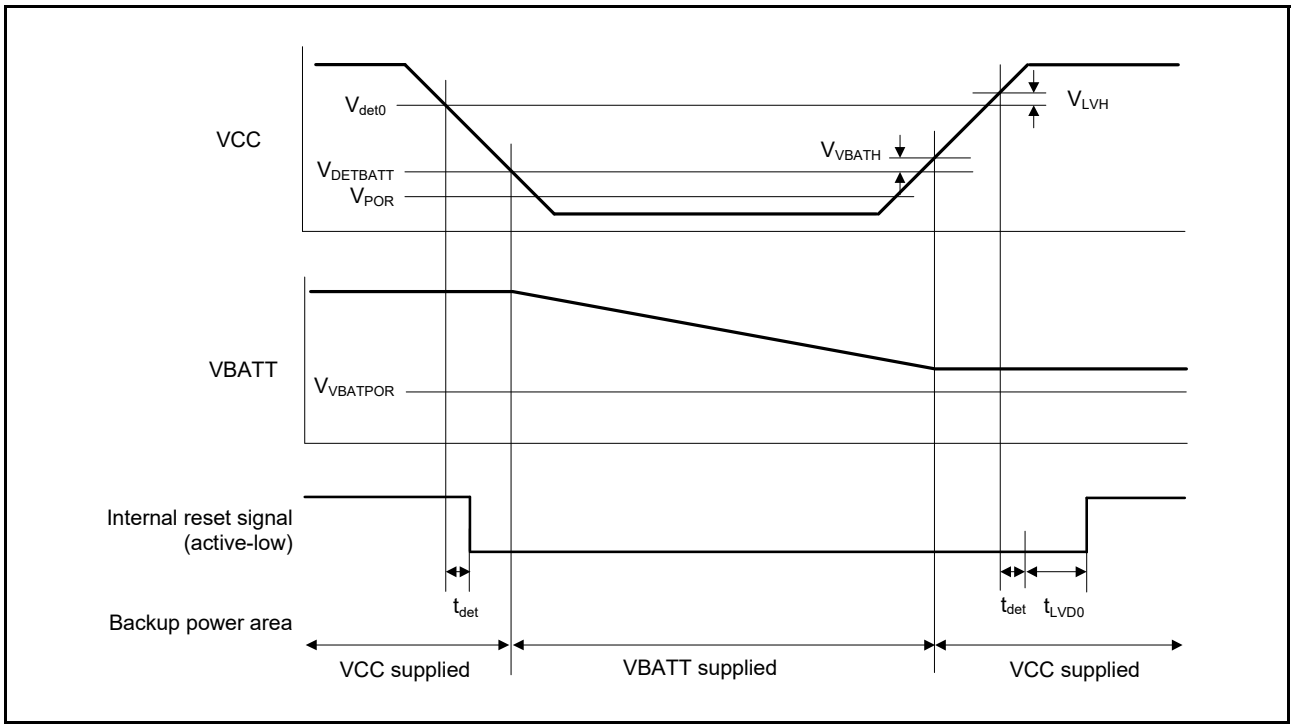

Figure 2.90 Power supply switching and LVD0 reset timing

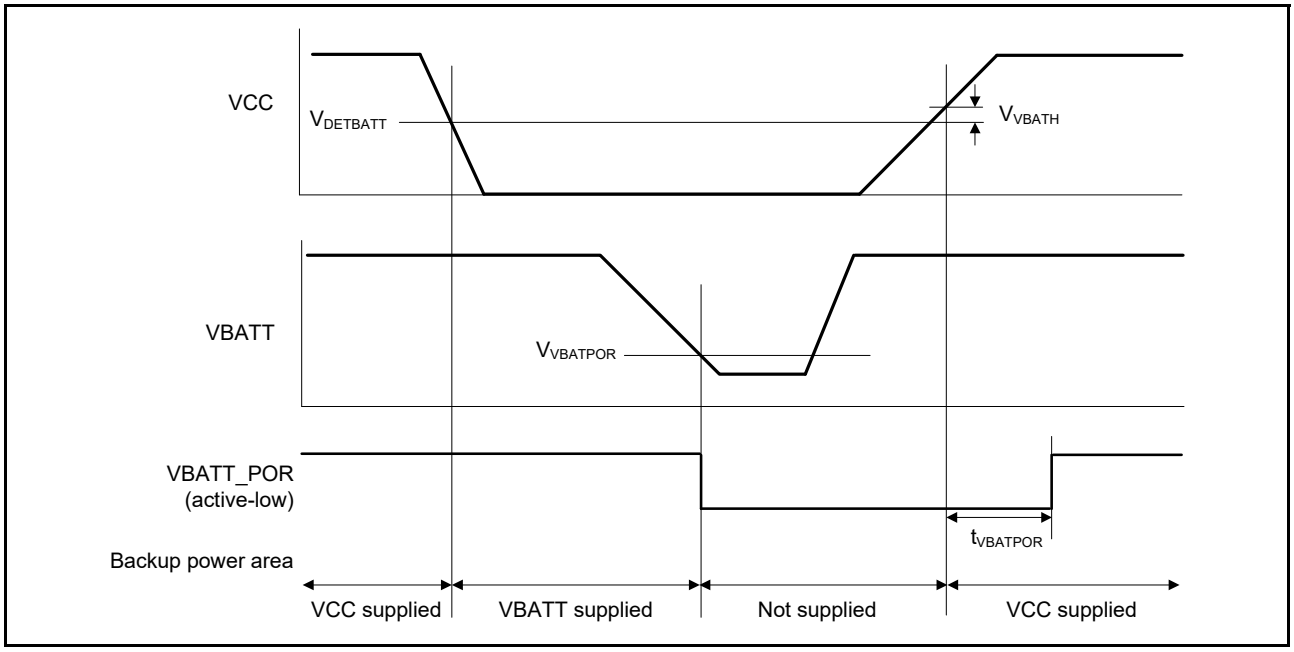

Figure 2.91 VBATT_POR reset timing

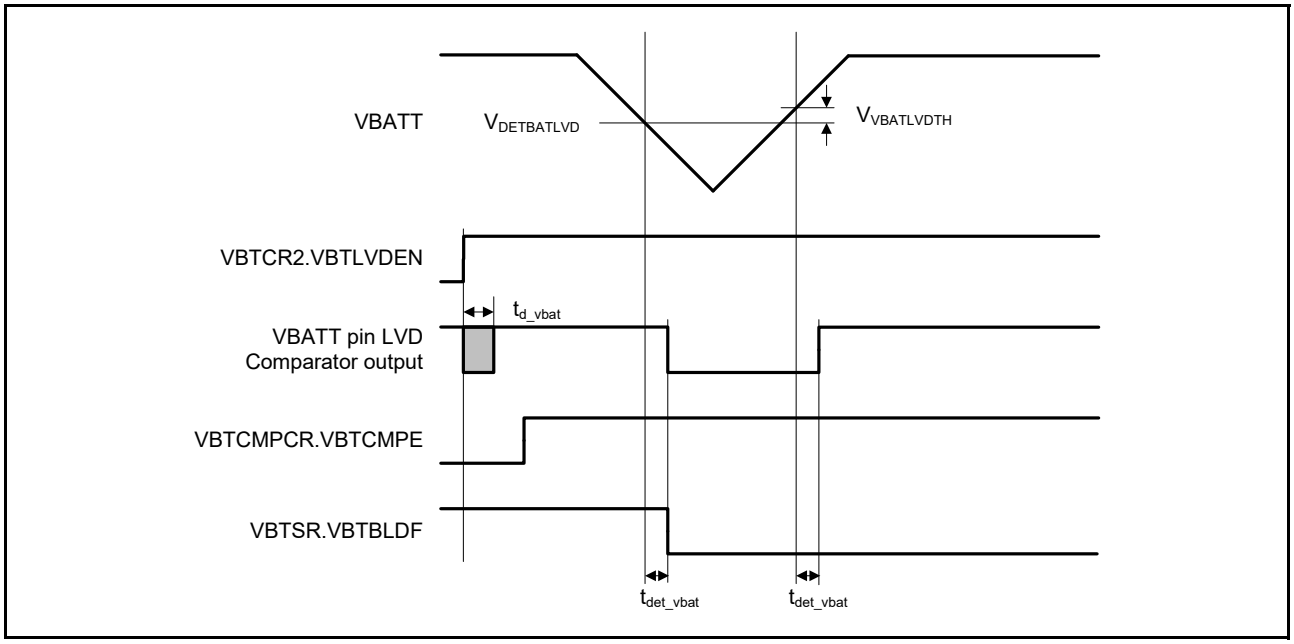

Figure 2.92 VBATT pin voltage detection circuit timing

Table 2.65 VBATT-I/O characteristics

Parameter			Symbol	Min	Typ	Max	Unit	Test conditions
VBATWIOn I/O output characteristics (n = 0 to 2)	VCC > $V_{DETBATT}$	VCC = 4.0 to 5.5 V	V_{OH}	VCC - 0.8	-	-	V	I_{OH} = -200 μA
			V_{OL}	-	-	0.8		I_{OL} = 200 μA
		VCC = 2.7 to 4.0 V	V_{OH}	VCC - 0.5	-	-		I_{OH} = -100 μA
			V_{OL}	-	-	0.5		I_{OL} = 100 μA
		VCC = $V_{DETBATT}$ to 2.7 V	V_{OH}	VCC - 0.3	-	-		I_{OH} = -50 μA
			V_{OL}	-	-	0.3		I_{OL} = 50 μA
	VCC < $V_{DETBATT}$	VBATT = 2.7 to 3.6 V	V_{OH}	V_{BATT} - 0.5	-	-		I_{OH} = -100 μA
			V_{OL}	-	-	0.5		I_{OL} = 100 μA
		VBATT = 1.6 to 2.7 V	V_{OH}	V_{BATT} - 0.3	-	-		I_{OH} = -50 μA
			V_{OL}	-	-	0.3		I_{OL} = 50 μA

2.11 CTSU Characteristics

Table 2.66 CTSU characteristics
Conditions: VCC = AVCC0 = 1.8 to 5.5 V

Parameter	Symbol	Min	Typ	Max	Unit	Test conditions
External capacitance connected to TSCAP pin	C_{tscap}	9	10	11	nF	-
TS pin capacitive load	C_{base}	-	-	50	pF	-
Permissible output high current	ΣIoH	-	-	-24	mA	When the mutual capacitance method is applied

2.12 Segment LCD Controller Characteristics

2.12.1 Resistance Division Method

[Static Display Mode]

Table 2.67 Resistance division method LCD characteristics (1)
Conditions: VL4 ≤ VCC ≤ 5.5 V

Parameter	Symbol	Min	Typ	Max	Unit	Test conditions
LCD drive voltage	V_{L4}	2.0	-	VCC	V	-

[1/2 Bias Method, 1/4 Bias Method]

Table 2.68 Resistance division method LCD characteristics (2)
Conditions: VL4 ≤ VCC ≤ 5.5 V

Parameter	Symbol	Min	Typ	Max	Unit	Test conditions
LCD drive voltage	V_{L4}	2.7	-	VCC	V	-

[1/3 Bias Method]

Table 2.69 Resistance division method LCD characteristics (3)
Conditions: VL4 ≤ VCC ≤ 5.5 V

Parameter	Symbol	Min	Typ	Max	Unit	Test conditions
LCD drive voltage	V_{L4}	2.5	-	VCC	V	-

2.12.2 Internal Voltage Boosting Method

[1/3 Bias Method]

Table 2.70 Internal voltage boosting method LCD characteristics

Conditions: VCC = 1.8 V to 5.5 V

Parameter	Symbol	Conditions		Min	Typ	Max	Unit	Test conditions
LCD output voltage variation range	V_{L1}	C1 to C4*1 = 0.47 μF	VLCD = 04h	0.90	1.0	1.08	V	-
			VLCD = 05h	0.95	1.05	1.13	V	-
			VLCD = 06h	1.00	1.10	1.18	V	-
			VLCD = 07h	1.05	1.15	1.23	V	-
			VLCD = 08h	1.10	1.20	1.28	V	-
			VLCD = 09h	1.15	1.25	1.33	V	-
			VLCD = 0Ah	1.20	1.30	1.38	V	-
			VLCD = 0Bh	1.25	1.35	1.43	V	-
			VLCD = 0Ch	1.30	1.40	1.48	V	-
			VLCD = 0Dh	1.35	1.45	1.53	V	-
			VLCD = 0Eh	1.40	1.50	1.58	V	-
			VLCD = 0Fh	1.45	1.55	1.63	V	-
			VLCD = 10h	1.50	1.60	1.68	V	-
			VLCD = 11h	1.55	1.65	1.73	V	-
			VLCD = 12h	1.60	1.70	1.78	V	-
			VLCD = 13h	1.65	1.75	1.83	V	-
Doubler output voltage	V_{L2}	C1 to C4*1 = 0.47 μF		$2 \times V_{L1} - 0.1$	$2 \times V_{L1}$	$2 \times V_{L1}$	V	-
Tripler output voltage	V_{L4}	C1 to C4*1 = 0.47 μF		$3 \times V_{L1} - 0.15$	$3 \times V_{L1}$	$3 \times V_{L1}$	V	-
Reference voltage setup time*2	t_{VL1S}			5	-	-	ms	Figure 2.93
LCD output voltage variation range*3	t_{VLWT}	C1 to C4*1 = 0.47 μF		500	-	-	ms	

Note 1. This is a capacitor that is connected between voltage pins used to drive the LCD.
C1: A capacitor connected between CAPH and CAPL
C2: A capacitor connected between VL1 and GND
C3: A capacitor connected between VL2 and GND
C4: A capacitor connected between VL4 and GND
C1 = C2 = C3 = C4 = 0.47 μF ± 30%

Note 2. This is the time required to wait from when the reference voltage is specified using the VLCD register (or when the internal voltage boosting method is selected (by setting the MDSET[1:0] bits in the LCDM0 register to 01b) if the default value reference voltage is used) until voltage boosting starts (VLCON = 1).

Note 3. This is the wait time from when voltage boosting is started (VLCON = 1) until display is enabled (LCDON = 1).

[1/4 Bias Method]

Table 2.71 Internal voltage boosting method LCD characteristics

Conditions: VCC = 1.8 V to 5.5 V

Parameter	Symbol	Conditions		Min	Typ	Max	Unit	Test conditions
LCD output voltage variation range	V_{L1}	C1 to C5*1 = 0.47 μF	VLCD = 04h	0.90	1.0	1.08	V	-
			VLCD = 05h	0.95	1.05	1.13	V	-
			VLCD = 06h	1.00	1.10	1.18	V	-
			VLCD = 07h	1.05	1.15	1.23	V	-
			VLCD = 08h	1.10	1.20	1.28	V	-
			VLCD = 09h	1.15	1.25	1.33	V	-
			VLCD = 0Ah	1.20	1.30	1.38	V	-
			VLCD = 0Bh	1.25	1.35	1.43	V	-
			VLCD = 0Ch	1.30	1.40	1.48	V	-
Doubler output voltage	V_{L2}	C1 to C5*1 = 0.47 μF		$2V_{L1}$ - 0.08	$2V_{L1}$	$2V_{L1}$	V	-
Tripler output voltage	V_{L3}	C1 to C5*1 = 0.47 μF		$3V_{L1}$ - 0.12	$3V_{L1}$	$3V_{L1}$	V	-
Quadruply output voltage	V_{L4}*4	C1 to C5*1 = 0.47 μF		$4V_{L1}$ - 0.16	$4V_{L1}$	$4V_{L1}$	V	-
Reference voltage setup time*2	t_{VL1S}			5	-	-	ms	Figure 2.93
LCD output voltage variation range*3	t_{VLWT}	C1 to C5*1 = 0.47 μF		500	-	-	ms	

Note 1. This is a capacitor that is connected between voltage pins used to drive the LCD.
C1: A capacitor connected between CAPH and CAPL
C2: A capacitor connected between VL1 and GND
C3: A capacitor connected between VL2 and GND
C4: A capacitor connected between VL3 and GND
C5: A capacitor connected between VL4 and GND
C1 = C2 = C3 = C4 = C5 = 0.47 μF ± 30%

Note 2. This is the time required to wait from when the reference voltage is specified by using the VLCD register or when the internal voltage boosting method is selected (by setting the MDSET[1] and MDSET[0] bits in the LCDM0 register to 01b) if the default value reference voltage is used) until voltage boosting starts (VLCON = 1).

Note 3. This is the wait time from when voltage boosting is started (VLCON = 1) until display is enabled (LCDON = 1).

Note 4. V_{L4} must be 5.5 V or lower.

2.12.3 Capacitor Split Method

[1/3 Bias Method]

Table 2.72 Internal voltage boosting method LCD characteristics

Conditions: VCC = 2.2 V to 5.5 V

Parameter	Symbol	Conditions	Min	Typ	Max	Unit	Test conditions
VL4 voltage*1	V_{L4}	C1 to C4 = 0.47 μF*2	-	VCC	-	V	-
VL2 voltage*1	V_{L2}	C1 to C4 = 0.47 μF*2	2/3 × V_{L4} - 0.07	2/3 × V_{L4}	2/3 × V_{L4} + 0.07	V	-
VL1 voltage*1	V_{L1}	C1 to C4 = 0.47 μF*2	1/3 × V_{L4} - 0.08	1/3 × V_{L4}	1/3 × V_{L4} + 0.08	V	-
Capacitor split wait time*1	t_{WAIT}		100	-	-	ms	Figure 2.93

Note 1. This is the wait time from when voltage bucking is started (VLCON = 1) until display is enabled (LCDON = 1).

Note 2. This is a capacitor that is connected between voltage pins used to drive the LCD.
C1: A capacitor connected between CAPH and CAPL
C2: A capacitor connected between VL1 and GND
C3: A capacitor connected between VL2 and GND
C4: A capacitor connected between VL4 and GND
C1 = C2 = C3 = C4 = 0.47 μF ± 30%.

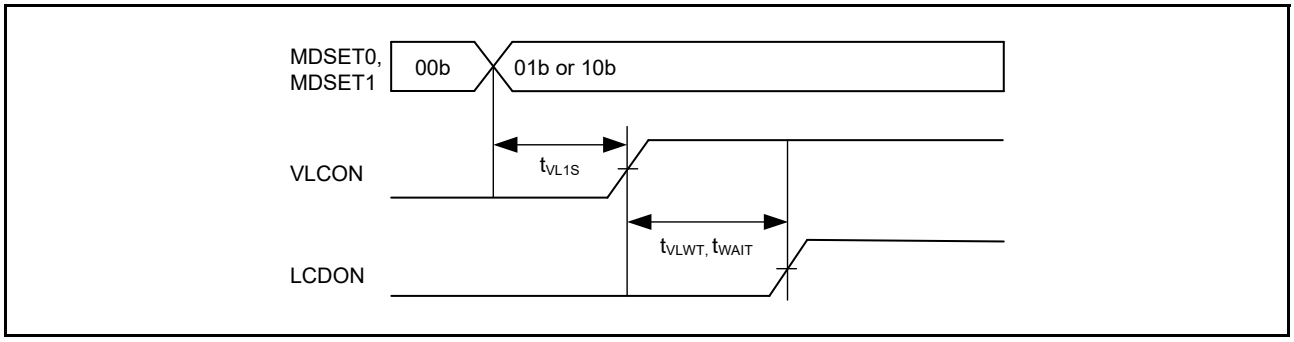

Figure 2.93 LCD reference voltage setup time, voltage boosting wait time, and capacitor split wait time

2.13 Comparator Characteristics

Table 2.73 ACMPLP characteristics

Conditions: VCC = 1.8 to 5.5 V

Parameter			Symbol	Min	Typ	Max	Unit	Test conditions
Reference voltage range	Standard mode	IVREFn (n = 0,1)	VREF	0	-	VCC - 1.4	V	-
	Window mode*2	IVREF1	VREFH	1.4	-	VCC	V	-
		IVREF0	VREFL	0	-	VCC - 1.4	V	-
Input voltage range			VI	0	-	VCC	V	-
Internal reference voltage			-	1.36	1.44	1.50	V	-
Output delay	High-speed mode		Td	-	-	1.2	μs	VCC = 3.0 Slew rate of input signal > 50 mV/μs
	Low-speed mode			-	-	5	μs	
	Window mode			-	-	2	μs	
Offset voltage*1	High-speed mode		-	-	-	50	mV	-
	Low-speed mode		-	-	-	40	mV	-
	Window mode		-	-	-	60	mV	-
Operation stabilization wait time			T_{cmp}	100	-	-	μs	-

Note 1. When 8-bit DAC output is used as the reference voltage, the offset voltage increases up to 2.5 × VCC/256.
Note 2. In window mode, be sure to satisfy the following condition: IVREF1 - IVREF0 ≥ 0.2 V.

2.14 OPAMP Characteristics

Table 2.74 OPAMP characteristics (1 of 2)

Conditions: VCC = AVCC0 = 1.8 to 5.5 V (AVCC0 = VCC when VCC < 2.0 V)

Parameter	Symbol	Conditions	Min	Typ	Max	Unit
Common mode input range	Vicm1	Low-power mode	0.2	-	AVCC0 – 0.5	V
	Vicm2	High-speed mode	0.3	-	AVCC0 – 0.6	V
Output voltage range	Vo1	Low-power mode	0.1	-	AVCC0 – 0.1	V
	Vo2	High-speed mode	0.1	-	AVCC0 – 0.1	V
Input offset voltage	Vioff	3σ	-10	-	10	mV
Open gain	Av		60	120	-	dB
Gain-bandwidth (GB) product	GBW1	Low-power mode	-	0.04	-	MHz
	GBW2	High-speed mode	-	1.7	-	MHz
Phase margin	PM	CL = 20 pF	50	-	-	deg
Gain margin	GM	CL = 20 pF	10	-	-	dB

Table 2.74 OPAMP characteristics (2 of 2)
Conditions: VCC = AVCC0 = 1.8 to 5.5 V (AVCC0 = VCC when VCC < 2.0 V)

Parameter	Symbol	Conditions		Min	Typ	Max	Unit
Equivalent input noise	Vnoise1	f = 1 kHz	Low power mode	-	230	-	nV/√Hz
	Vnoise2	f = 10 kHz		-	200	-	nV/√Hz
	Vnoise3	f = 1 kHz	High-speed mode	-	90	-	nV/√Hz
	Vnoise4	f = 2 kHz		-	70	-	nV/√Hz
Power supply reduction ratio	PSRR			-	90	-	dB
Common mode signal reduction ratio	CMRR			-	90	-	dB
Stabilization wait time	Tstd1	CL = 20 pF Only operational amplifier is activated *1	Low power mode	650	-	-	μs
	Tstd2		High-speed mode	13	-	-	μs
	Tstd3	CL = 20 pF Operational amplifier and reference current circuit are activated simultaneously	Low power mode	650	-	-	μs
	Tstd4		High-speed mode	13	-	-	μs
Settling time	Tset1	CL = 20 pF	Low power mode	-	-	750	μs
	Tset2		High-speed mode	-	-	13	μs
Slew rate	Tslew1	CL = 20 pF	Low power mode	-	0.02	-	V/μs
	Tslew2		High-speed mode	-	1.1	-	V/μs
Load current	Iload1	Low power mode		-100	-	100	μA
	Iload2	High-speed mode		-100	-	100	μA
Load capacitance	CL			-	-	20	pF

Note 1. When the operational amplifier reference current circuit is activated in advance.

2.15 Flash Memory Characteristics

2.15.1 Code Flash Memory Characteristics

Table 2.75 Code flash characteristics (1)

Parameter		Symbol	Min	Typ	Max	Unit	Test conditions
Reprogramming/erasure cycle*1		N_{PEC}	1000	-	-	Times	-
Data hold time	After 1000 times of N_{PEC}	t_{DRP}	20*2, *3	-	-	Year	T_a = +85°C

Note 1. The reprogram/erase cycle is the number of erasures for each block. When the reprogram/erase cycle is n times (n = 1000), erasing can be done n times for each block. For instance, when 8-byte programming is performed 256 times for different addresses in 2-KB blocks, and the entire block is erased, the reprogram/erase cycle is counted as one. However, programming the same address for several times as one erasure is not enabled (overwriting is prohibited).
Note 2. Characteristic when using the flash memory programmer and the self-programming library provided by Renesas Electronics.
Note 3. This result is obtained from reliability testing.

Table 2.76 Code flash characteristics (2) (1 of 2)
High-speed operating mode
Conditions: VCC = 2.7 to 5.5 V

Parameter		Symbol	FCLK = 1 MHz			FCLK = 32 MHz			Unit
			Min	Typ	Max	Min	Typ	Max	
Programming time	8-byte	t_{P8}	-	116	998	-	54	506	μs
Erasure time	2-KB	t_{E2K}	-	9.03	287	-	5.67	222	ms
Blank check time	8-byte	t_{BC8}	-	-	56.8	-	-	16.6	μs
	2-KB	t_{BC2K}	-	-	1899	-	-	140	μs
Erase suspended time		t_{SED}	-	-	22.5	-	-	10.7	μs
Startup area switching setting time		t_{SAS}	-	21.7	585	-	12.1	447	ms
Access window time		t_{AWS}	-	21.7	585	-	12.1	447	ms

Table 2.76 Code flash characteristics (2) (2 of 2)
High-speed operating mode
Conditions: VCC = 2.7 to 5.5 V

Parameter	Symbol	FCLK = 1 MHz			FCLK = 32 MHz			Unit
		Min	Typ	Max	Min	Typ	Max	
OCD/serial programmer ID setting time	t_{OSIS}	-	21.7	585	-	12.1	447	ms
Flash memory mode transition wait time 1	t_{DIS}	2	-	-	2	-	-	μs
Flash memory mode transition wait time 2	t_{MS}	5	-	-	5	-	-	μs

Note: Does not include the time until each operation of the flash memory is started after instructions are executed by software.
Note: The lower-limit frequency of FCLK is 1 MHz during programming or erasing the flash memory. When using FCLK at below 4 MHz, the frequency can be set to 1 MHz, 2 MHz, or 3 MHz. A non-integer frequency value, such as 1.5 MHz, cannot be set.
Note: The frequency accuracy of FCLK must be ±3.5%. Confirm the frequency accuracy of the clock source.

Table 2.77 Code flash characteristics (3)
Middle-speed operating mode
Conditions: VCC = 1.8 to 5.5 V, Ta = -40 to +85°C

Parameter		Symbol	FCLK = 1 MHz			FCLK = 8 MHz			Unit
			Min	Typ	Max	Min	Typ	Max	
Programming time	8-byte	t_{P8}	-	157	1411	-	101	966	μs
Erasure time	2-KB	t_{E2K}	-	9.10	289	-	6.10	228	ms
Blank check time	8-byte	t_{BC8}	-	-	87.7	-	-	52.5	μs
	2-KB	t_{BC2K}	-	-	1930	-	-	414	μs
Erase suspended time		t_{SED}	-	-	32.7	-	-	21.6	μs
Startup area switching setting time		t_{SAS}	-	22.5	592	-	14.0	464	ms
Access window time		t_{AWS}	-	22.5	592	-	14.0	464	ms
OCD/serial programmer ID setting time		t_{OSIS}	-	22.5	592	-	14.0	464	ms
Flash memory mode transition wait time 1		t_{DIS}	2	-	-	2	-	-	μs
Flash memory mode transition wait time 2		t_{MS}	720	-	-	720	-	-	ns

Note: Does not include the time until each operation of the flash memory is started after instructions are executed by software.
Note: The lower-limit frequency of FCLK is 1 MHz during programming or erasing the flash memory. When using FCLK at below 4 MHz, the frequency can be set to 1 MHz, 2 MHz, or 3 MHz. A non-integer frequency such as 1.5 MHz cannot be set.
Note: The frequency accuracy of FCLK must be ±3.5%. Confirm the frequency accuracy of the clock source.

2.15.2 Data Flash Memory Characteristics

Table 2.78 Data flash characteristics (1)

Parameter		Symbol	Min	Typ	Max	Unit	Test conditions
Reprogramming/erasure cycle*1		N_{DPEC}	100000	1000000	-	Times	-
Data hold time	After 10000 times of N_{DPEC}	t_{DDRP}	20*2, *3	-	-	Year	Ta = +85°C
	After 100000 times of N_{DPEC}		5*2, *3	-	-	Year	
	After 1000000 times of N_{DPEC}		-	1*2, *3	-	Year	Ta = +25°C

Note 1. The reprogram/erase cycle is the number of erasure for each block. When the reprogram/erase cycle is n times (n = 100000), erasing can be performed n times for each block. For instance, when 1-byte programming is performed 1000 times for different addresses in 1-byte blocks, and then the entire block is erased, the reprogram/erase cycle is counted as one. However, programming the same address for several times as one erasure is not enabled. (overwriting is prohibited).
Note 2. Characteristics when using the flash memory programmer and the self-programming library provided by Renesas Electronics.
Note 3. These results are obtained from reliability testing.

Table 2.79 Data flash characteristics (2)
High-speed operating mode
Conditions: VCC = 2.7 to 5.5 V

Parameter		Symbol	FCLK = 4 MHz			FCLK = 32 MHz			Unit
			Min	Typ	Max	Min	Typ	Max	
Programming time	1-byte	t_{DP1}	-	52.4	463	-	42.1	387	μs
Erasure time	1-KB	t_{DE1K}	-	8.98	286	-	6.42	237	ms
Blank check time	1-byte	t_{DBC1}	-	-	24.3	-	-	16.6	μs
	1-KB	t_{DBC1K}	-	-	1872	-	-	512	μs
Suspended time during erasing		t_{DSED}	-	-	13.0	-	-	10.7	μs
Data flash STOP recovery time		t_{DSTOP}	5	-	-	5	-	-	μs

Note: Does not include the time until each operation of the flash memory is started after instructions are executed by software.
Note: The lower-limit frequency of FCLK is 1 MHz during programming or erasing the flash memory. When using FCLK at below 4 MHz, the frequency can be set to 1 MHz, 2 MHz, or 3 MHz. A non-integer frequency such as 1.5 MHz cannot be set.
Note: The frequency accuracy of FCLK must be ±3.5%. Confirm the frequency accuracy of the clock source.

Table 2.80 Data flash characteristics (3)
Middle-speed operating mode
Conditions: VCC = 1.8 to 5.5 V, Ta = -40 to +85°C

Parameter		Symbol	FCLK = 4 MHz			FCLK = 8 MHz			Unit
			Min	Typ	Max	Min	Typ	Max	
Programming time	1-byte	t_{DP1}	-	94.7	886	-	89.3	849	μs
Erasure time	1-KB	t_{DE1K}	-	9.59	299	-	8.29	273	ms
Blank check time	1-byte	t_{DBC1}	-	-	56.2	-	-	52.5	μs
	1-KB	t_{DBC1K}	-	-	2.17	-	-	1.51	ms
Suspended time during erasing		t_{DSED}	-	-	23.0	-	-	21.7	μs
Data flash STOP recovery time		t_{DSTOP}	720	-	-	720	-	-	ns

Note: Does not include the time until each operation of the flash memory is started after instructions are executed by software.
Note: The lower-limit frequency of FCLK is 1 MHz during programming or erasing the flash memory. When using FCLK at below 4 MHz, the frequency can be set to 1 MHz, 2 MHz, or 3 MHz. A non-integer frequency such as 1.5 MHz cannot be set.
Note: The frequency accuracy of FCLK must be ±3.5%. Confirm the frequency accuracy of the clock source.

2.16 Boundary Scan

Table 2.81 Boundary scan
Conditions: VCC = AVCC0 = 2.4 to 5.5 V

Parameter	Symbol	Min	Typ	Max	Unit	Test conditions
TCK clock cycle time	t_{TCKcyc}	100	-	-	ns	Figure 2.94
TCK clock high pulse width	t_{TCKH}	45	-	-	ns	
TCK clock low pulse width	t_{TCKL}	45	-	-	ns	
TCK clock rise time	t_{TCKr}	-	-	5	ns	
TCK clock fall time	t_{TCKf}	-	-	5	ns	
TMS setup time	t_{TMSS}	20	-	-	ns	Figure 2.95
TMS hold time	t_{TMSH}	20	-	-	ns	
TDI setup time	t_{TDIS}	20	-	-	ns	
TDI hold time	t_{TDIH}	20	-	-	ns	
TDO data delay	t_{TDOD}	-	-	70	ns	
Boundary Scan circuit start up time*1	t_{BSSTUP}	t_{RESWP}	-	-	-	Figure 2.96

Note 1. Boundary scan does not function until power-on-reset becomes negative.

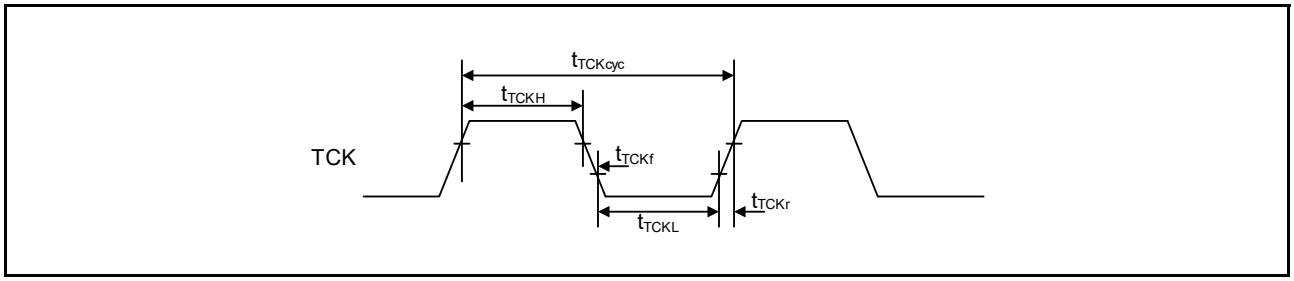

Figure 2.94 Boundary scan TCK timing

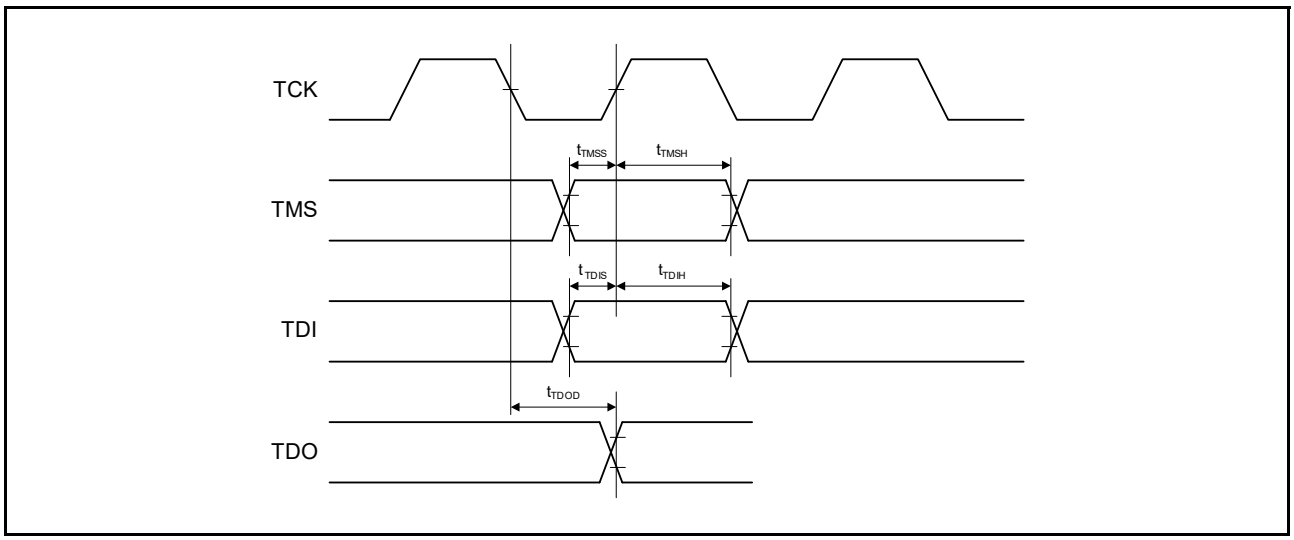

Figure 2.95 Boundary scan input/output timing

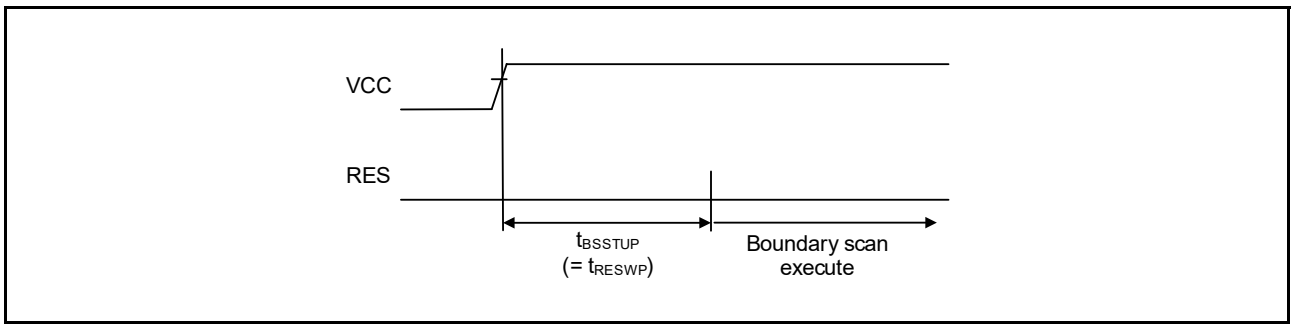

Figure 2.96 Boundary scan circuit start up timing

2.17 Joint Test Action Group (JTAG)

Table 2.82 JTAG (debug) characteristics (1) (1 of 2)
Conditions: VCC = 2.4 to 5.5 V

Parameter	Symbol	Min	Typ	Max	Unit	Test conditions
TCK clock cycle time	t_{TCKcyc}	80	-	-	ns	Figure 2.97
TCK clock high pulse width	t_{TCKH}	35	-	-	ns	
TCK clock low pulse width	t_{TCKL}	35	-	-	ns	
TCK clock rise time	t_{TCKr}	-	-	5	ns	
TCK clock fall time	t_{TCKf}	-	-	5	ns	

Table 2.82 JTAG (debug) characteristics (1) (2 of 2)
Conditions: VCC = 2.4 to 5.5 V

Parameter	Symbol	Min	Typ	Max	Unit	Test conditions
TMS setup time	t_{TMSS}	16	-	-	ns	Figure 2.98
TMS hold time	t_{TMSH}	16	-	-	ns	
TDI setup time	t_{TDIS}	16	-	-	ns	
TDI hold time	t_{TDIH}	16	-	-	ns	
TDO data delay time	t_{TDOD}	-	-	70	ns	

Table 2.83 JTAG (debug) characteristics (2)
Conditions: VCC = 1.6 to 2.4 V

Parameter	Symbol	Min	Typ	Max	Unit	Test conditions
TCK clock cycle time	t_{TCKcyc}	250	-	-	ns	Figure 2.97
TCK clock high pulse width	t_{TCKH}	120	-	-	ns	
TCK clock low pulse width	t_{TCKL}	120	-	-	ns	
TCK clock rise time	t_{TCKr}	-	-	5	ns	
TCK clock fall time	t_{TCKf}	-	-	5	ns	
TMS setup time	t_{TMSS}	50	-	-	ns	Figure 2.98
TMS hold time	t_{TMSH}	50	-	-	ns	
TDI setup time	t_{TDIS}	50	-	-	ns	
TDI hold time	t_{TDIH}	50	-	-	ns	
TDO data delay time	t_{TDOD}	-	-	150	ns	

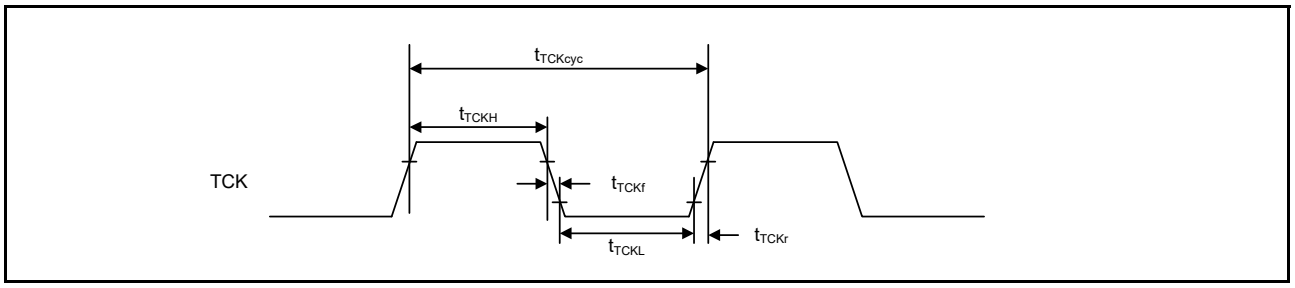

Figure 2.97 JTAG TCK timing

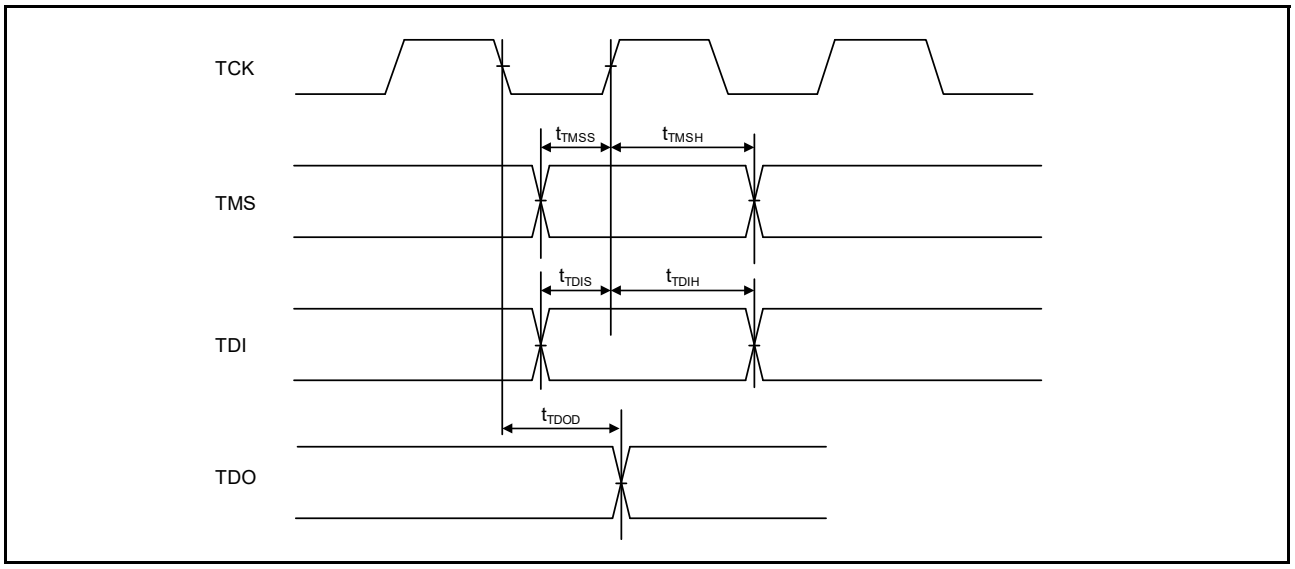

Figure 2.98 JTAG input/output timing

2.17.1 Serial Wire Debug (SWD)

Table 2.84 SWD characteristics (1)
Conditions: VCC = 2.4 to 5.5 V

Parameter	Symbol	Min	Typ	Max	Unit	Test conditions
SWCLK clock cycle time	$t_{SWCKcyc}$	80	-	-	ns	Figure 2.99
SWCLK clock high pulse width	t_{SWCKH}	35	-	-	ns	
SWCLK clock low pulse width	t_{SWCKL}	35	-	-	ns	
SWCLK clock rise time	t_{SWCKr}	-	-	5	ns	
SWCLK clock fall time	t_{SWCKf}	-	-	5	ns	
SWDIO setup time	t_{SWDS}	16	-	-	ns	Figure 2.100
SWDIO hold time	t_{SWDH}	16	-	-	ns	
SWDIO data delay time	t_{SWDD}	2	-	70	ns	

Table 2.85 SWD characteristics (2)
Conditions: VCC = 1.6 to 2.4 V

Parameter	Symbol	Min	Typ	Max	Unit	Test conditions
SWCLK clock cycle time	$t_{SWCKcyc}$	250	-	-	ns	Figure 2.99
SWCLK clock high pulse width	t_{SWCKH}	120	-	-	ns	
SWCLK clock low pulse width	t_{SWCKL}	120	-	-	ns	
SWCLK clock rise time	t_{SWCKr}	-	-	5	ns	
SWCLK clock fall time	t_{SWCKf}	-	-	5	ns	
SWDIO setup time	t_{SWDS}	50	-	-	ns	Figure 2.100
SWDIO hold time	t_{SWDH}	50	-	-	ns	
SWDIO data delay time	t_{SWDD}	2	-	150	ns	

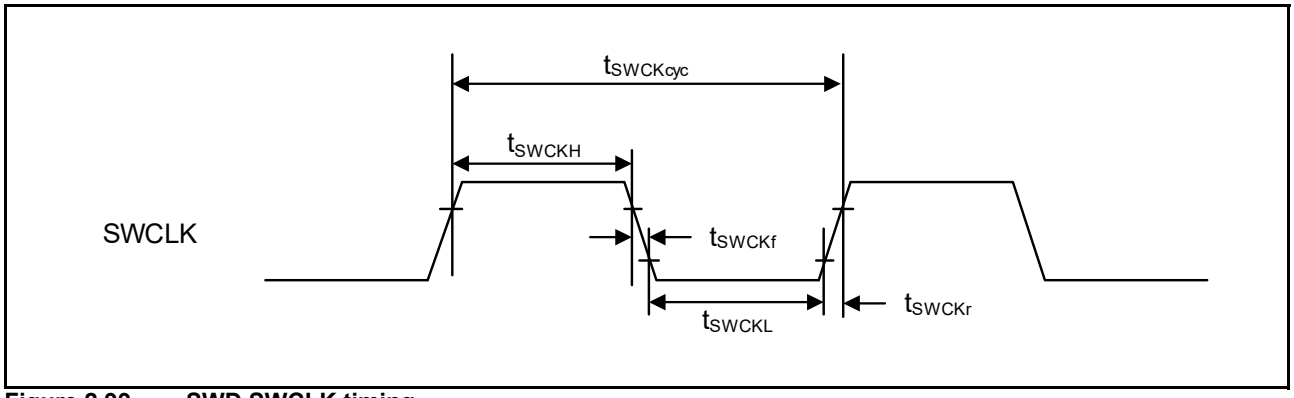

Figure 2.99 SWD SWCLK timing

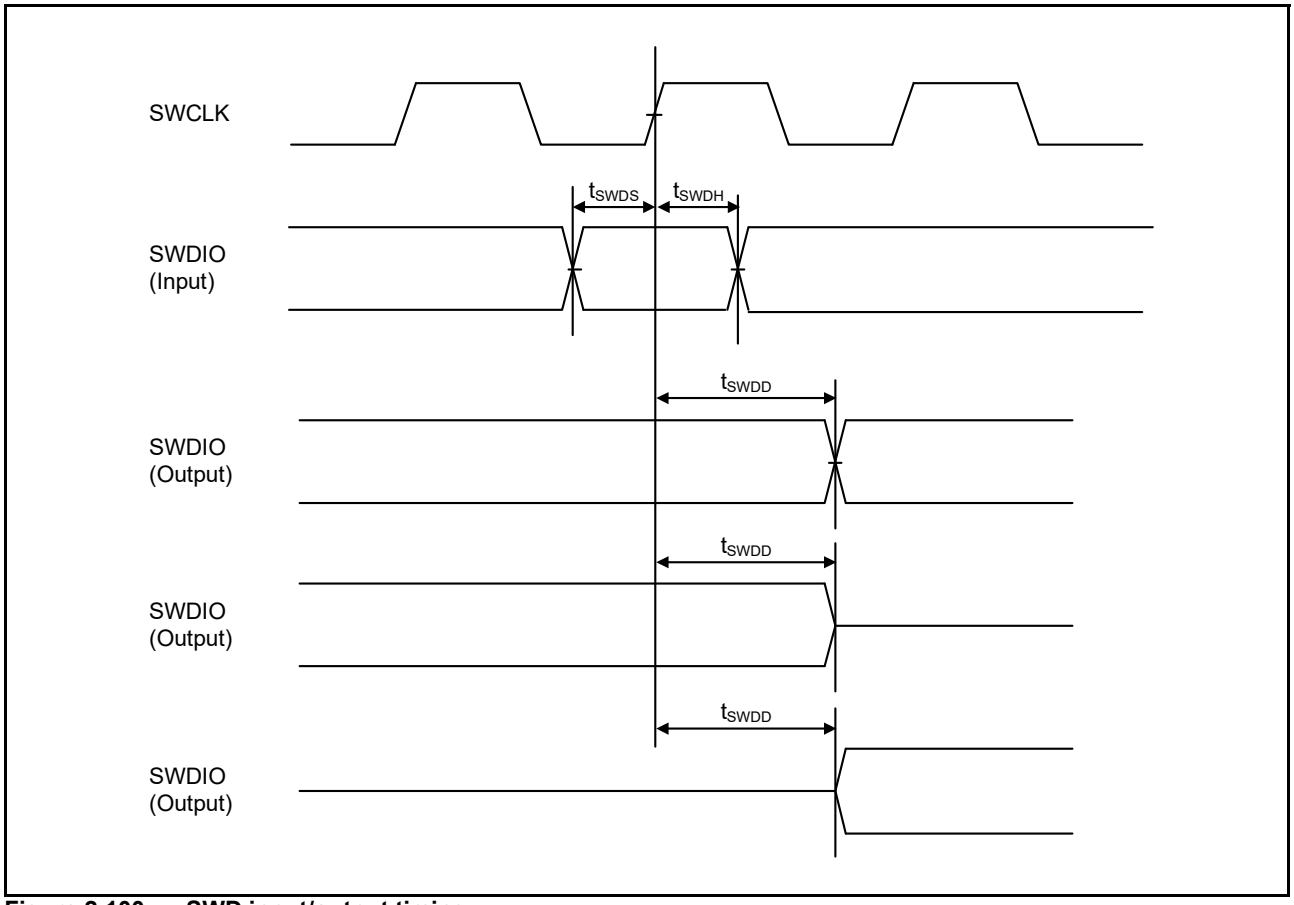

Figure 2.100 SWD input/output timing

Appendix 1. Package Dimensions

Information on the latest version of the package dimensions or mountings is displayed in “Packages” on the Renesas Electronics Corporation website.

JEITA Package Code	RENESAS Code	Previous Code	MASS[Typ.]
P-TFLGA145-7x7-0.50	PTLG0145KA-A	145F0G	0.1g

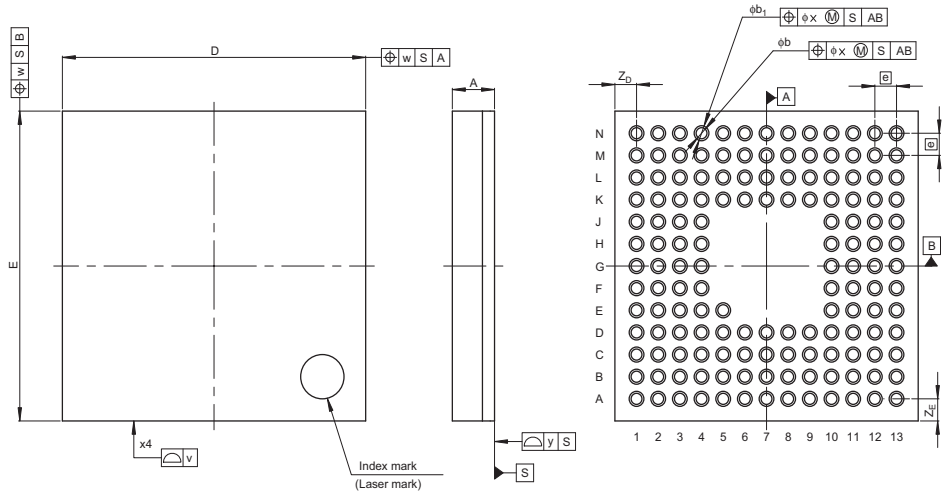

Reference Symbol	Dimension in Millimeters		
	Min	Nom	Max
D	—	7.0	—
E	—	7.0	—
v	—	—	0.15
w	—	—	0.20
A	—	—	1.05
e	—	0.5	—
b	0.21	0.25	0.29
b_1	0.29	0.34	0.39
x	—	—	0.08
y	—	—	0.08
Z_D	—	0.5	—
Z_E	—	0.5	—

Figure 1.1 LGA 145-pin

JEITA Package Code	RENESAS Code	Previous Code	MASS (Typ) [g]
P-LFQFP144-20x20-0.50	PLQP0144KA-B	—	1.2

Unit: mm

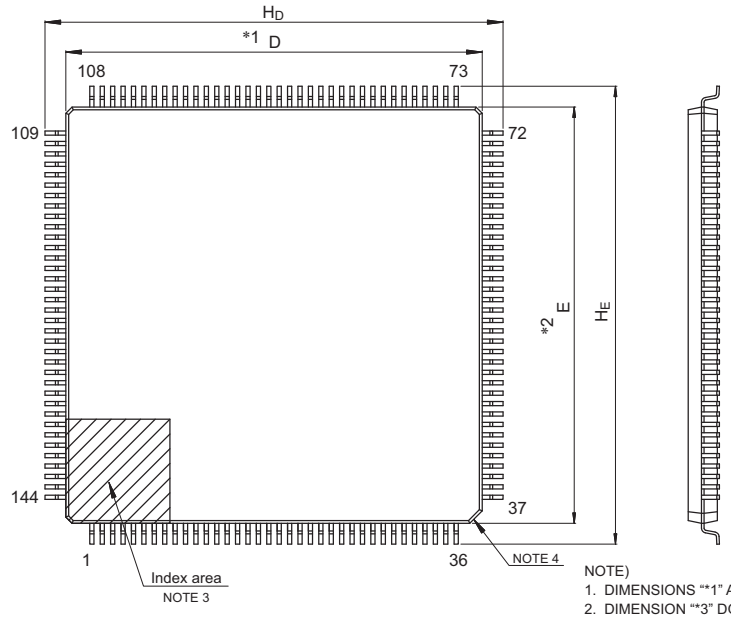

NOTE)
1. DIMENSIONS "*1" AND "*2" DO NOT INCLUDE MOLD FLASH.
2. DIMENSION "*3" DOES NOT INCLUDE TRIM OFFSET.
3. PIN 1 VISUAL INDEX FEATURE MAY VARY, BUT MUST BE LOCATED WITHIN THE HATCHED AREA.
4. CHAMFERS AT CORNERS ARE OPTIONAL, SIZE MAY VARY.

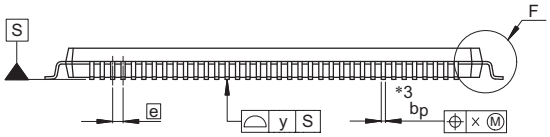

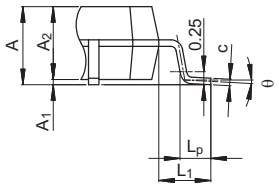

Detail F

Reference Symbol	Dimensions in millimeters		
	Min	Nom	Max
D	19.9	20.0	20.1
E	19.9	20.0	20.1
A_2	—	1.4	—
H_D	21.8	22.0	22.2
H_E	21.8	22.0	22.2
A	—	—	1.7
A_1	0.05	—	0.15
b_p	0.17	0.20	0.27
c	0.09	—	0.20
θ	0°	3.5°	8°
e	—	0.5	—
x	—	—	0.08
y	—	—	0.10
L_p	0.45	0.6	0.75
L_1	—	1.0	—

Figure 1.2 LQFP 144-pin

JEITA Package Code	RENESAS Code	Previous Code	MASS (Typ) [g]
P-LFBGA121-8x8-0.65	PLBG0121JA-A	—	0.15

Unit: mm

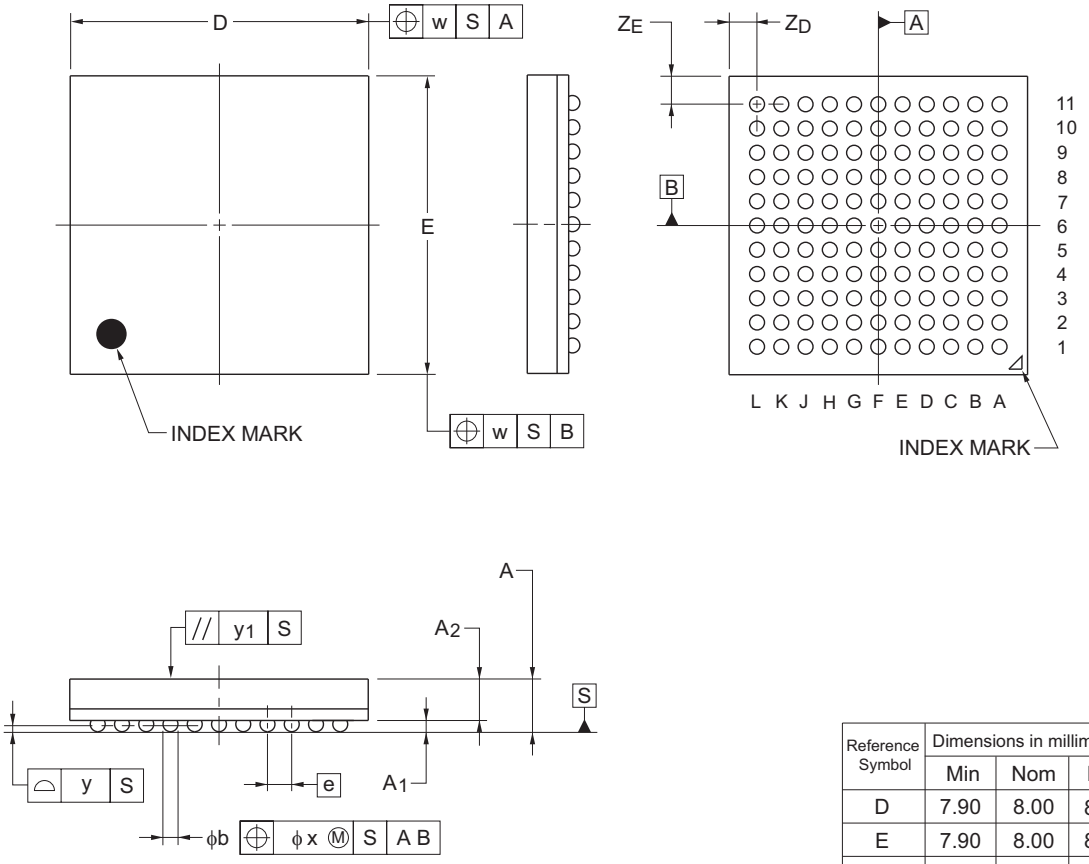

Reference Symbol	Dimensions in millimeters		
	Min	Nom	Max
D	7.90	8.00	8.10
E	7.90	8.00	8.10
w	—	0.20	—
A	1.11	1.21	1.31
A_1	0.25	0.30	0.35
A_2	—	0.91	—
e	—	0.65	—
b	0.35	0.40	0.45
x	—	0.08	—
y	—	0.10	—
y_1	—	0.20	—
Z_D	—	0.75	—
Z_E	—	0.75	—

Figure 1.3 BGA 121-pin

JEITA Package Code	RENESAS Code	Previous Code	MASS[Typ.]
P-TFLGA100-7x7-0.65	PTLG0100JA-A	100F0G	0.1g

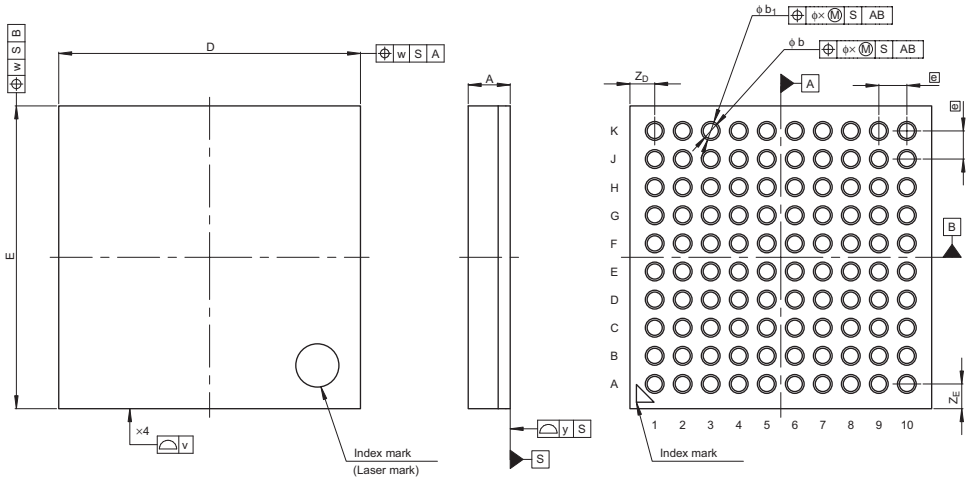

Reference Symbol	Dimension in Millimeters		
	Min	Nom	Max
D	—	7.0	—
E	—	7.0	—
v	—	—	0.15
w	—	—	0.20
A	—	—	1.05
e	—	0.65	—
b	0.31	0.35	0.39
b_1	0.385	0.435	0.485
x	—	—	0.08
y	—	—	0.10
Z_D	—	0.575	—
Z_E	—	0.575	—

Figure 1.4 LGA 100-pin

JEITA Package Code	RENESAS Code	Previous Code	MASS (Typ) [g]
P-LFQFP100-14x14-0.50	PLQP0100KB-B	—	0.6

Unit: mm

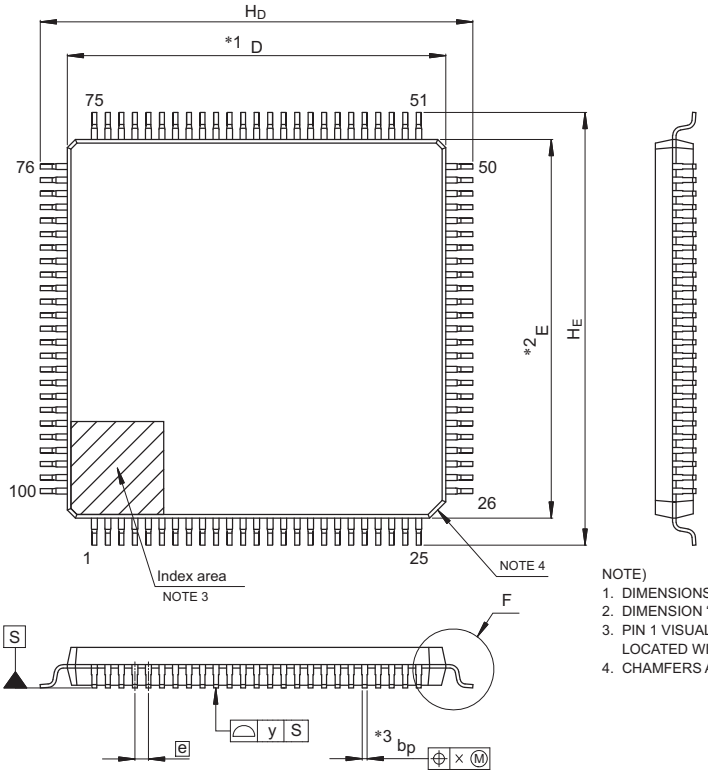

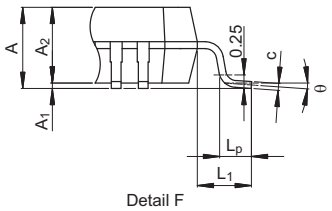

NOTE)
1. DIMENSIONS "*1" AND "*2" DO NOT INCLUDE MOLD FLASH.
2. DIMENSION "*3" DOES NOT INCLUDE TRIM OFFSET.
3. PIN 1 VISUAL INDEX FEATURE MAY VARY, BUT MUST BE LOCATED WITHIN THE HATCHED AREA.
4. CHAMFERS AT CORNERS ARE OPTIONAL, SIZE MAY VARY.

Reference Symbol	Dimensions in millimeters		
	Min	Nom	Max
D	13.9	14.0	14.1
E	13.9	14.0	14.1
A_2	—	1.4	—
H_D	15.8	16.0	16.2
H_E	15.8	16.0	16.2
A	—	—	1.7
A_1	0.05	—	0.15
b_p	0.15	0.20	0.27
c	0.09	—	0.20
θ	0°	3.5°	8°
e	—	0.5	—
x	—	—	0.08
y	—	—	0.08
L_p	0.45	0.6	0.75
L_1	—	1.0	—

Figure 1.5 LQFP 100-pin

JEITA Package Code	RENESAS Code	Previous Code	MASS (Typ) [g]
P-LFQFP64-10x10-0.50	PLQP0064KB-C	—	0.3

Unit: mm

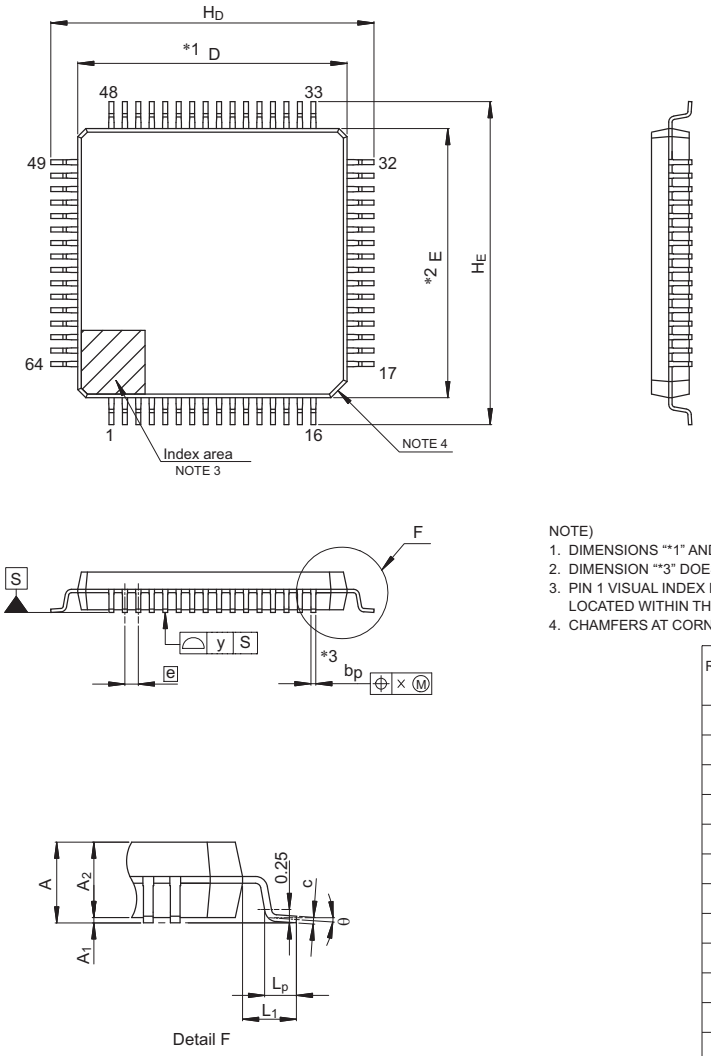

NOTE)
1. DIMENSIONS "*1" AND "*2" DO NOT INCLUDE MOLD FLASH.
2. DIMENSION "*3" DOES NOT INCLUDE TRIM OFFSET.
3. PIN 1 VISUAL INDEX FEATURE MAY VARY, BUT MUST BE LOCATED WITHIN THE HATCHED AREA.
4. CHAMFERS AT CORNERS ARE OPTIONAL, SIZE MAY VARY.

Reference Symbol	Dimensions in millimeters		
	Min	Nom	Max
D	9.9	10.0	10.1
E	9.9	10.0	10.1
A_2	—	1.4	—
H_D	11.8	12.0	12.2
H_E	11.8	12.0	12.2
A	—	—	1.7
A_1	0.05	—	0.15
b_p	0.15	0.20	0.27
c	0.09	—	0.20
θ	0°	3.5°	8°
e	—	0.5	—
x	—	—	0.08
y	—	—	0.08
L_p	0.45	0.6	0.75
L_1	—	1.0	—

Figure 1.6 LQFP 64-pin

JEITA Package code	RENESAS code	Previous code	MASS(TYP.)[g]
P-HWQFN64-8x8-0.40	PWQN0064LA-A	P64K8-40-9B5-3	0.16

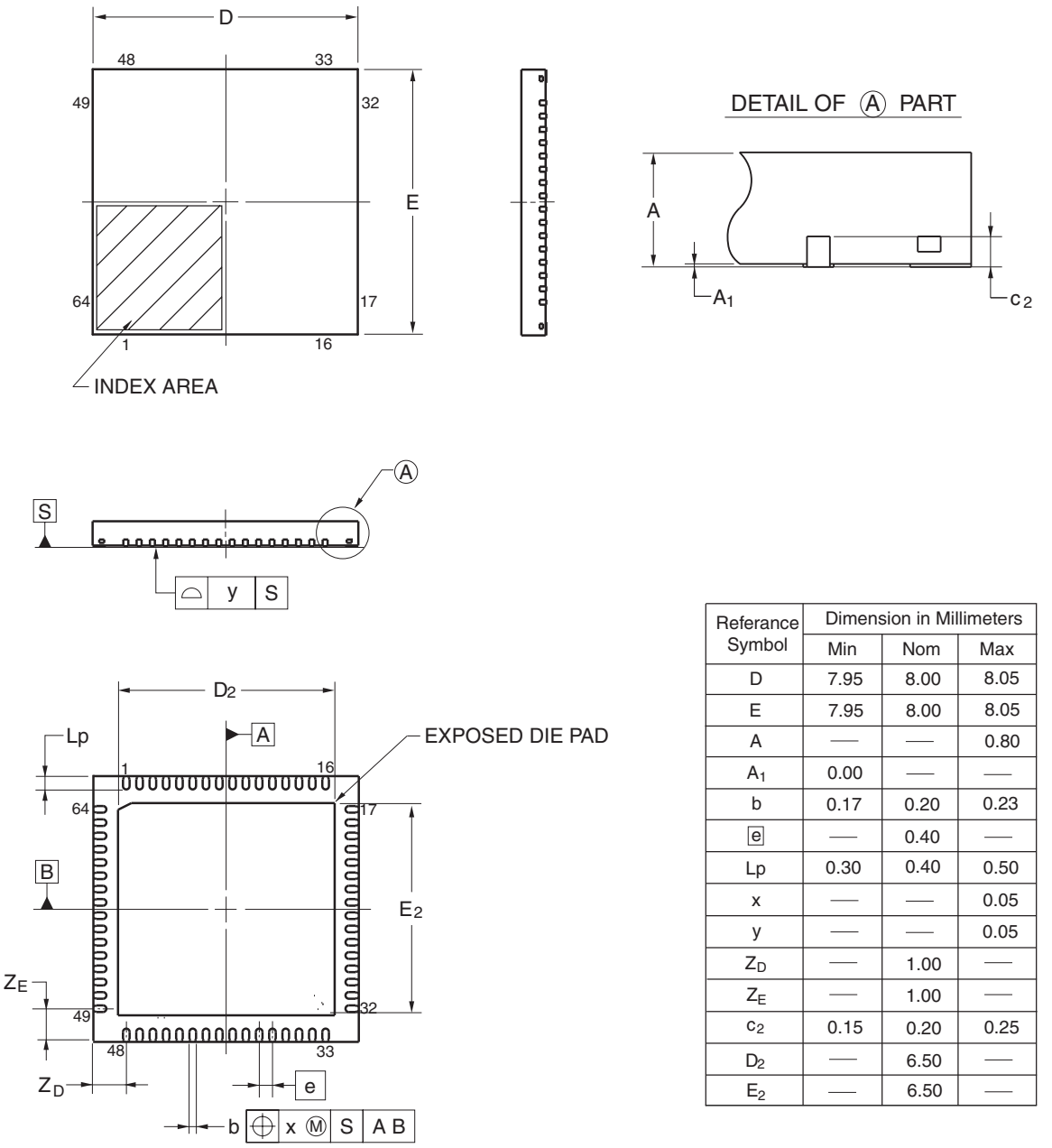

Referance Symbol	Dimension in Millimeters		
	Min	Nom	Max
D	7.95	8.00	8.05
E	7.95	8.00	8.05
A	—	—	0.80
A_1	0.00	—	—
b	0.17	0.20	0.23
e	—	0.40	—
Lp	0.30	0.40	0.50
x	—	—	0.05
y	—	—	0.05
Z_D	—	1.00	—
Z_E	—	1.00	—
c_2	0.15	0.20	0.25
D_2	—	6.50	—
E_2	—	6.50	—

Figure 1.7 QFN 64-pin

Revision History	S3A1 Microcontroller Group Datasheet

Rev.	Date	Summary
1.00	Oct 30, 2017	1st release
1.10	Mar 7, 2018	2nd release
1.20	Oct 29, 2018	3rd release

Website and Support

Visit the following vanity URLs to learn about key elements of the Synergy Platform, download components and related documentation, and get support.

Synergy Software	renesassynergy.com/software
Synergy Software Package	renesassynergy.com/ssp
Software add-ons	renesassynergy.com/addons
Software glossary	renesassynergy.com/softwareglossary
Development tools	renesassynergy.com/tools
Synergy Hardware	renesassynergy.com/hardware
Microcontrollers	renesassynergy.com/mcus
MCU glossary	renesassynergy.com/mcuglossary
Parametric search	renesassynergy.com/parametric
Kits	renesassynergy.com/kits
Synergy Solutions Gallery	renesassynergy.com/solutionsgallery
Partner projects	renesassynergy.com/partnerprojects
Application projects	renesassynergy.com/applicationprojects
Self-service support resources:	
Documentation	renesassynergy.com/docs
Knowledgebase	renesassynergy.com/knowledgebase
Forums	renesassynergy.com/forum
Training	renesassynergy.com/training
Videos	renesassynergy.com/videos
Chat and web ticket	renesassynergy.com/support

Proprietary Notice

All text, graphics, photographs, trademarks, logos, artwork and computer code, collectively known as content, contained in this document is owned, controlled or licensed by or to Renesas, and is protected by trade dress, copyright, patent and trademark laws, and other intellectual property rights and unfair competition laws. Except as expressly provided herein, no part of this document or content may be copied, reproduced, republished, posted, publicly displayed, encoded, translated, transmitted or distributed in any other medium for publication or distribution or for any commercial enterprise, without prior written consent from Renesas.

Arm® and Cortex® are registered trademarks of Arm Limited. CoreSight™ is a trademark of Arm Limited.

CoreMark® is a registered trademark of the Embedded Microprocessor Benchmark Consortium.

Magic Packet™ is a trademark of Advanced Micro Devices, Inc.

SuperFlash® is a registered trademark of Silicon Storage Technology, Inc. in several countries including the United States and Japan.

Other brands and names mentioned in this document may be the trademarks or registered trademarks of their respective holders.

S3A1 Microcontroller Group Datasheet

Publication Date: Rev.1.20 Oct 29, 2018

Published by: Renesas Electronics Corporation

General Precautions

1. Precaution against Electrostatic Discharge (ESD)

   A strong electrical field, when exposed to a CMOS device, can cause destruction of the gate oxide and ultimately degrade the device operation. Steps must be taken to stop the generation of static electricity as much as possible, and quickly dissipate it when it occurs. Environmental control must be adequate. When it is dry, a humidifier should be used. This is recommended to avoid using insulators that can easily build up static electricity. Semiconductor devices must be stored and transported in an anti-static container, static shielding bag or conductive material. All test and measurement tools including work benches and floors must be grounded. The operator must also be grounded using a wrist strap. Semiconductor devices must not be touched with bare hands. Similar precautions must be taken for printed circuit boards with mounted semiconductor devices.

2. Processing at power-on

   The state of the product is undefined at the time when power is supplied. The states of internal circuits in the LSI are indeterminate and the states of register settings and pins are undefined at the time when power is supplied. In a finished product where the reset signal is applied to the external reset pin, the states of pins are not guaranteed from the time when power is supplied until the reset process is completed. In a similar way, the states of pins in a product that is reset by an on-chip power-on reset function are not guaranteed from the time when power is supplied until the power reaches the level at which resetting is specified.

3. Input of signal during power-off state

   Do not input signals or an I/O pull-up power supply while the device is powered off. The current injection that results from input of such a signal or I/O pull-up power supply may cause malfunction and the abnormal current that passes in the device at this time may cause degradation of internal elements. Follow the guideline for input signal during power-off state as described in your product documentation.

4. Handling of unused pins

   Handle unused pins in accordance with the directions given under handling of unused pins in the manual. The input pins of CMOS products are generally in the high-impedance state. In operation with an unused pin in the open-circuit state, extra electromagnetic noise is induced in the vicinity of the LSI, an associated shoot-through current flows internally, and malfunctions occur due to the false recognition of the pin state as an input signal become possible.

5. Clock signals

   After applying a reset, only release the reset line after the operating clock signal becomes stable. When switching the clock signal during program execution, wait until the target clock signal is stabilized. When the clock signal is generated with an external resonator or from an external oscillator during a reset, ensure that the reset line is only released after full stabilization of the clock signal. Additionally, when switching to a clock signal produced with an external resonator or by an external oscillator while program execution is in progress, wait until the target clock signal is stable.

6. Voltage application waveform at input pin

   Waveform distortion due to input noise or a reflected wave may cause malfunction. If the input of the CMOS device stays in the area between V_{IL} (Max.) and V_{IH} (Min.) due to noise, for example, the device may malfunction. Take care to prevent chattering noise from entering the device when the input level is fixed, and also in the transition period when the input level passes through the area between V_{IL} (Max.) and V_{IH} (Min.).

7. Prohibition of access to reserved addresses

   Access to reserved addresses is prohibited. The reserved addresses are provided for possible future expansion of functions. Do not access these addresses as the correct operation of the LSI is not guaranteed.

8. Differences between products

   Before changing from one product to another, for example to a product with a different part number, confirm that the change will not lead to problems. The characteristics of a microprocessing unit or microcontroller unit products in the same group but having a different part number might differ in terms of internal memory capacity, layout pattern, and other factors, which can affect the ranges of electrical characteristics, such as characteristic values, operating margins, immunity to noise, and amount of radiated noise. When changing to a product with a different part number, implement a system-evaluation test for the given product.

Notice

1. Descriptions of circuits, software and other related information in this document are provided only to illustrate the operation of semiconductor products and application examples. You are fully responsible for the incorporation or any other use of the circuits, software, and information in the design of your product or system. Renesas Electronics disclaims any and all liability for any losses and damages incurred by you or third parties arising from the use of these circuits, software, or information.
2. Renesas Electronics hereby expressly disclaims any warranties against and liability for infringement or any other claims involving patents, copyrights, or other intellectual property rights of third parties, by or arising from the use of Renesas Electronics products or technical information described in this document, including but not limited to, the product data, drawings, charts, programs, algorithms, and application examples.
3. No license, express, implied or otherwise, is granted hereby under any patents, copyrights or other intellectual property rights of Renesas Electronics or others.
4. You shall not alter, modify, copy, or reverse engineer any Renesas Electronics product, whether in whole or in part. Renesas Electronics disclaims any and all liability for any losses or damages incurred by you or third parties arising from such alteration, modification, copying or reverse engineering.
5. Renesas Electronics products are classified according to the following two quality grades: “Standard” and “High Quality”. The intended applications for each Renesas Electronics product depends on the product’s quality grade, as indicated below.
   "Standard": Computers; office equipment; communications equipment; test and measurement equipment; audio and visual equipment; home electronic appliances; machine tools; personal electronic equipment; industrial robots; etc.
   "High Quality": Transportation equipment (automobiles, trains, ships, etc.); traffic control (traffic lights); large-scale communication equipment; key financial terminal systems; safety control equipment; etc.
   Unless expressly designated as a high reliability product or a product for harsh environments in a Renesas Electronics data sheet or other Renesas Electronics document, Renesas Electronics products are not intended or authorized for use in products or systems that may pose a direct threat to human life or bodily injury (artificial life support devices or systems; surgical implantations; etc.), or may cause serious property damage (space system; undersea repeaters; nuclear power control systems; aircraft control systems; key plant systems; military equipment; etc.). Renesas Electronics disclaims any and all liability for any damages or losses incurred by you or any third parties arising from the use of any Renesas Electronics product that is inconsistent with any Renesas Electronics data sheet, user’s manual or other Renesas Electronics document.
6. When using Renesas Electronics products, refer to the latest product information (data sheets, user’s manuals, application notes, “General Notes for Handling and Using Semiconductor Devices” in the reliability handbook, etc.), and ensure that usage conditions are within the ranges specified by Renesas Electronics with respect to maximum ratings, operating power supply voltage range, heat dissipation characteristics, installation, etc. Renesas Electronics disclaims any and all liability for any malfunctions, failure or accident arising out of the use of Renesas Electronics products outside of such specified ranges.
7. Although Renesas Electronics endeavors to improve the quality and reliability of Renesas Electronics products, semiconductor products have specific characteristics, such as the occurrence of failure at a certain rate and malfunctions under certain use conditions. Unless designated as a high reliability product or a product for harsh environments in a Renesas Electronics data sheet or other Renesas Electronics document, Renesas Electronics products are not subject to radiation resistance design. You are responsible for implementing safety measures to guard against the possibility of bodily injury, injury or damage caused by fire, and/or danger to the public in the event of a failure or malfunction of Renesas Electronics products, such as safety design for hardware and software, including but not limited to redundancy, fire control and malfunction prevention, appropriate treatment for aging degradation or any other appropriate measures. Because the evaluation of microcomputer software alone is very difficult and impractical, you are responsible for evaluating the safety of the final products or systems manufactured by you.
8. Please contact a Renesas Electronics sales office for details as to environmental matters such as the environmental compatibility of each Renesas Electronics product. You are responsible for carefully and sufficiently investigating applicable laws and regulations that regulate the inclusion or use of controlled substances, including without limitation, the EU RoHS Directive, and using Renesas Electronics products in compliance with all these applicable laws and regulations. Renesas Electronics disclaims any and all liability for damages or losses occurring as a result of your noncompliance with applicable laws and regulations.
9. Renesas Electronics products and technologies shall not be used for or incorporated into any products or systems whose manufacture, use, or sale is prohibited under any applicable domestic or foreign laws or regulations. You shall comply with any applicable export control laws and regulations promulgated and administered by the governments of any countries asserting jurisdiction over the parties or transactions.
10. It is the responsibility of the buyer or distributor of Renesas Electronics products, or any other party who distributes, disposes of, or otherwise sells or transfers the product to a third party, to notify such third party in advance of the contents and conditions set forth in this document.
11. This document shall not be reprinted, reproduced or duplicated in any form, in whole or in part, without prior written consent of Renesas Electronics.
12. Please contact a Renesas Electronics sales office if you have any questions regarding the information contained in this document or Renesas Electronics products.

(Note 1) “Renesas Electronics” as used in this document means Renesas Electronics Corporation and also includes its directly or indirectly controlled subsidiaries.

(Note 2) “Renesas Electronics product(s)” means any product developed or manufactured by or for Renesas Electronics.

(Rev.4.0-1 November 2017)

SALES OFFICES Renesas Electronics Corporation http://www.renesas.com

Refer to "http://www.renesas.com/" for the latest and detailed information.

Renesas Electronics Corporation
TOYOSU FORESIA, 3-2-24 Toyosu, Koto-ku, Tokyo 135-0061, Japan

Renesas Electronics America Inc.
1001 Murphy Ranch Road, Milpitas, CA 95035, U.S.A.
Tel: +1-408-432-8888, Fax: +1-408-434-5351

Renesas Electronics Canada Limited
9251 Yonge Street, Suite 8309 Richmond Hill, Ontario Canada L4C 9T3
Tel: +1-905-237-2004

Renesas Electronics Europe Limited
Dukes Meadow, Millboard Road, Bourne End, Buckinghamshire, SL8 5FH, U.K
Tel: +44-1628-651-700

Renesas Electronics Europe GmbH
Arcadiastrasse 10, 40472 Düsseldorf, Germany
Tel: +49-211-6503-0, Fax: +49-211-6503-1327

Renesas Electronics (China) Co., Ltd.
Room 1709 Quantum Plaza, No.27 ZhichunLu, Haidian District, Beijing, 100191 P. R. China
Tel: +86-10-8235-1155, Fax: +86-10-8235-7679

Renesas Electronics (Shanghai) Co., Ltd.
Unit 301, Tower A, Central Towers, 555 Langao Road, Putuo District, Shanghai, 200333 P. R. China
Tel: +86-21-2226-0888, Fax: +86-21-2226-0999

Renesas Electronics Hong Kong Limited
Unit 1601-1611, 16/F., Tower 2, Grand Century Place, 193 Prince Edward Road West, Mongkok, Kowloon, Hong Kong
Tel: +852-2265-6688, Fax: +852 2886-9022

Renesas Electronics Taiwan Co., Ltd.
13F, No. 363, Fu Shing North Road, Taipei 10543, Taiwan
Tel: +886-2-8175-9600, Fax: +886 2-8175-9670

Renesas Electronics Singapore Pte. Ltd.
80 Bendemeer Road, Unit #06-02 Hyflux Innovation Centre, Singapore 339949
Tel: +65-6213-0200, Fax: +65-6213-0300

Renesas Electronics Malaysia Sdn.Bhd.
Unit 1207, Block B, Menara Amcorp, Amcorp Trade Centre, No. 18, Jln Persiaran Barat, 46050 Petaling Jaya, Selangor Darul Ehsan, Malaysia
Tel: +60-3-7955-9390, Fax: +60-3-7955-9510

Renesas Electronics India Pvt. Ltd.
No.777C, 100 Feet Road, HAL 2nd Stage, Indiranagar, Bangalore 560 038, India
Tel: +91-80-67208700, Fax: +91-80-67208777

Renesas Electronics Korea Co., Ltd.
17F, KAMCO Yangjae Tower, 262, Gangnam-daero, Gangnam-gu, Seoul, 06265 Korea
Tel: +82-2-558-3737, Fax: +82-2-558-5338

© 2018 Renesas Electronics Corporation. All rights reserved.
Colophon 7.2

Renesas Synergy™ Platform
S3A1 Microcontroller Group

Renesas Electronics Corporation

R01DS0324EU0120

Mouser Electronics

Authorized Distributor

Click to View Pricing, Inventory, Delivery & Lifecycle Information:

Renesas Electronics:

R7FS3A17C2A01CLJ#AC0 R7FS3A17C2A01CLK#AC0 R7FS3A17C3A01CFB#AA0 R7FS3A17C3A01CNB#AC0 R7FS3A17C2A01CBJ#AC0 R7FS3A17C3A01CFM#AA0 R7FS3A17C3A01CFP#AA0 R7FS3A17C2A01CLK#BC0 R7FS3A17C3A01CFB#BA0 R7FS3A17C3A01CFM#BA0 R7FS3A17C3A01CFP#BA0 R7FS3A17C2A01CLJ#BC0 R7FS3A17C3A01CNB#BA0 R7FS3A17C3A01CNB#AA0