DC/DC Converter

TZL Series, 60 to 300 Watt

Features

- Compact metal case with screw terminal block
- Wide 2:1 input range
- I/O isolation 1500VDC
- Input reverse polarity protection
- No minimum load required
- Soft start, low inrush current
- Overload and short circuit protection
- EMC compliance with EN 61000-6-1 and EN 50082-1
- Adjustable output voltage
- 3-year product warranty

This range of boxed DC/DC converter are designed for all applications, where high reliability and long lifetime are important. They provide excellent electric specifications and full compliance to the European EMC and low voltage directive. With their low profile case and screw terminal block they are easy to install in any equipment.

Models

Order code	Output power	Input voltage	Output voltage nom.	Output current max.
TZL 060-2412	60 Watt	18 - 36 VDC	12 VDC	5.0 A
TZL 060-2424			24 VDC	2.5 A
TZL 060-4812		36 - 72 VDC	12 VDC	5.0 A
TZL 060-4824			24 VDC	2.5 A
TZL 100-2412	100 Watt	19 - 36 VDC	12 VDC	8.5 A
TZL 100-2424			24 VDC	4.2 A
TZL 100-4812		36 - 72 VDC	12 VDC	8.5 A
TZL 100-4824			24 VDC	4.2 A
TZL 150-2412 *	150 Watt	19 - 32 VDC	12 VDC	12.5 A
TZL 150-2424 *			24 VDC	6.3 A
TZL 150-4812 *		36 - 72 VDC	12 VDC	12.5 A
TZL 150-4824 *			24 VDC	6.3 A
TZL 300-4812	300 Watt	36 - 72 VDC	12 VDC	26.7 A
TZL 300-4824			24 VDC	13.4 A

Note * End of life

Input Specifications

Input current (at full load)		19 Vin	36 Vin
	TZL 060 models	4.6 A typ.	2.4 A typ.
	TZL 100 models	8.0 A typ.	4.0 A typ.
	TZL 150 models	12 A typ.	6.3 A typ.
	TZL 300 models	--	30 A typ.
Recommended circuit breaker (characteristic C) or slow blow fuse	TZL 060 models	5 A	
	TZL 100 models	10 A	
	TZL 150 models	15 A	
	TZL 300 models	20 A	

Output Specifications

Output voltage adjustment range		±10 %
Regulation	– Input variation	1 % max.
	– Load variation (10–100%)	1 % max.
Minimum Load		not required
Ripple and noise (20 MHz bandwidth)	12 VDC output	<100mVpk-pk
	24 VDC output	<150mVpk-pk
Output current limitation		105 % – 150 % of Iout max.
Overload protection mode		Fold back, automatic recovery
Over voltage protection (only output 1)		115 % – 140 % of Vout nom.
Short circuit protection		foldback, automatic recovery
Capacitive load, max.	TZL 060: 12 VDC / 24 VDC output models	11'000 µF / 2'000 µF
	TZL 100: 12 VDC / 24 VDC output models	14'200 µF / 1'000 µF
	TZL 150: 12 VDC / 24 VDC output models	8'600 µF / 470 µF
	TZL 300: 12 VDC / 24VDC output models	2'700 µF / 1'000 µF

General Specifications

Temperature ranges	– Operating	–10°C to +60°C
	– Load derating above 50°C	2.5 %/K
	– Storage (non operating)	–10°C to +75°C
Temperature coefficient		0.03 %/°C
Efficiency		~80 % (depending on model and load)
Humidity (non condensing)		85 % rel max. (non condensing)
Switching frequency		50 kHz typ. (pulse width modulation)
Hold-up time		20 ms min.
Isolation voltage (60sec.)	– Input/Output	1'500 VAC
	– Input/Case	1'500 VAC
	– Output/Case	500 VAC
Reliability /calculated MTBF (MIL-HDBK-217F, at+25°C, ground benign)		>250'000 h
Electromagnetic compatibility (EMC)		EN 61000-6-1
Electromagnetic compatibility (EMC), radiated emission		EN 55022, class B
Casing material	cover:	nickel plated steel
	chassis:	natural aluminium
Environmental compliance	– Reach	www.tracopower.com/overview/tzl
	– RoHS	RoHS directive 2011/65/EU

All specifications valid at nominal input voltage, full load and +25°C after warm-up time unless otherwise stated.

Case Dimensions

TZL 060 Series

Connection	
1	+Vin
2	–Vin
3	NC
4	–Vout
5	–Vout
6	+Vout
7	+Vout

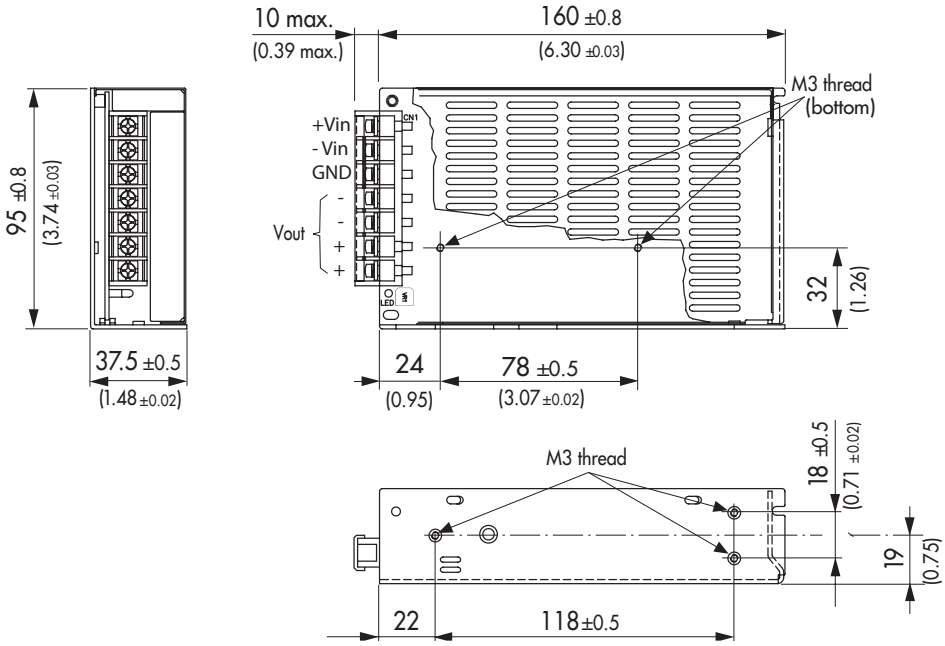

Weight: 0.7 kg (25 oz)

TZL 100 Series

Connection	
1	+Vin
2	–Vin
3	NC
4	–Vout
5	–Vout
6	+Vout
7	+Vout

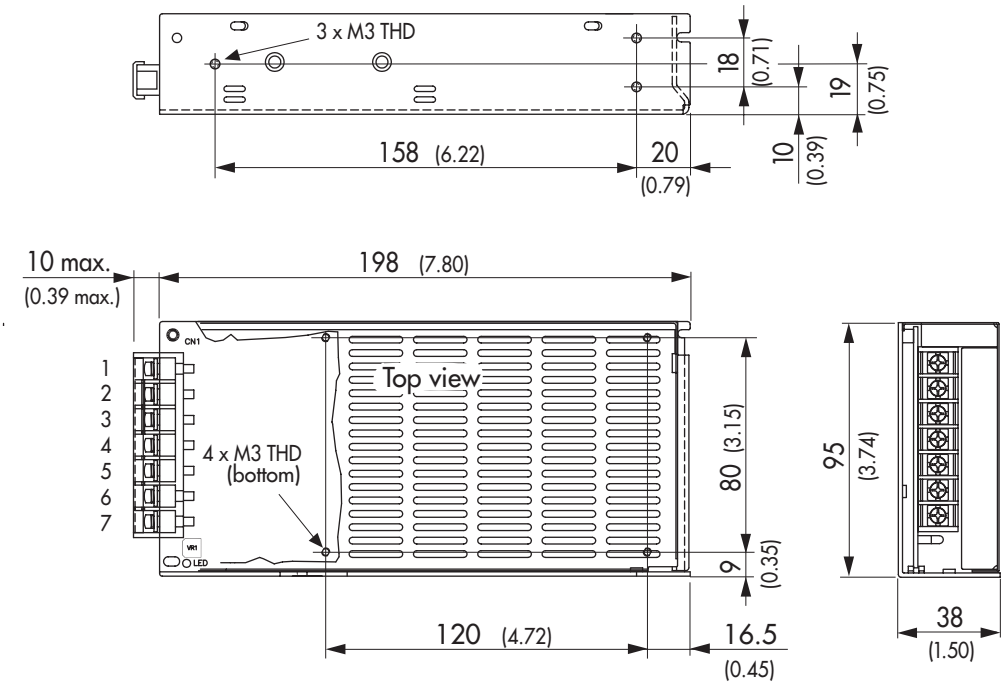

Caution! Max mounting screw penetration: 3.0 mm (0.12)

Weight: 0.8 kg (28 oz)

Dimensions in [mm], () = Inch
Tolerances ±0.8 (0.03)
Monting hole pich tolerances ±0.5 (0.02)

Case Dimensions

TZL 150 Series (End of life)

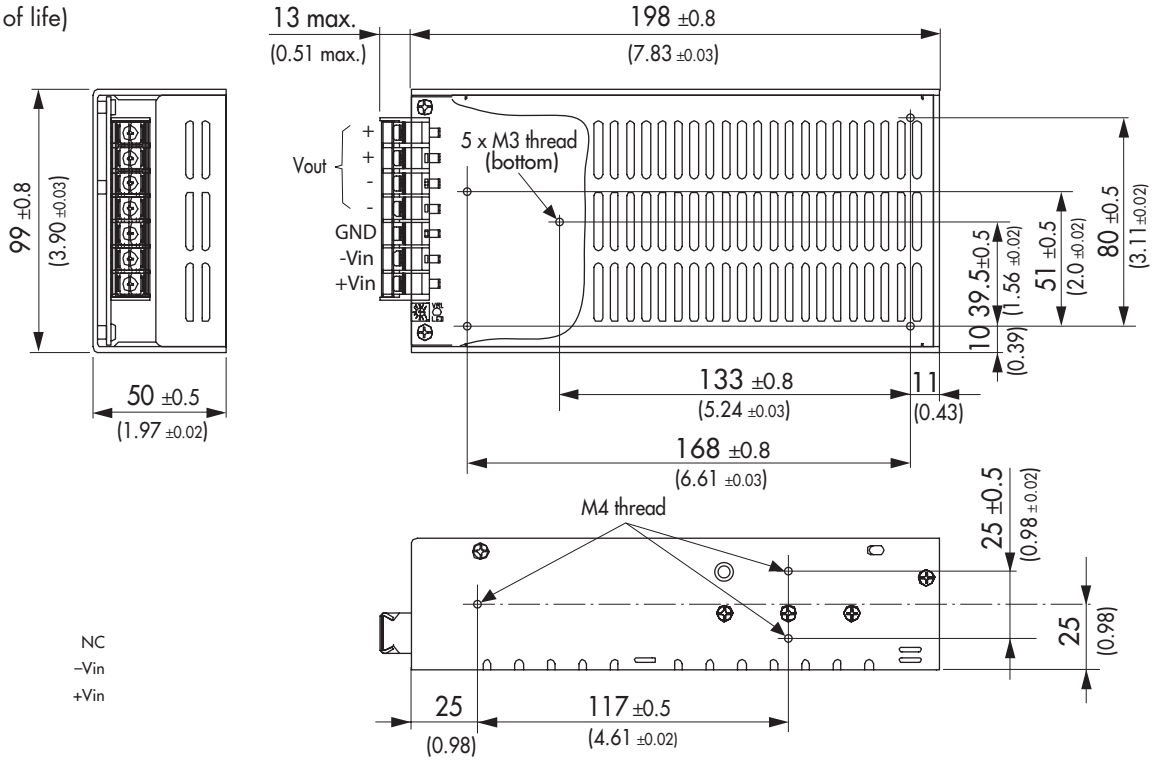

Caution! Max mounting screw penetration: 3.0 mm (0.12)

Weight: 0.89 kg (31 oz)

Dimensions in [mm], () = Inch
Tolerances ±0.8 (0.03)
Monting hole pich tolerances ±0.5 (0.02)

Outline Dimensions

TZL 300 Series

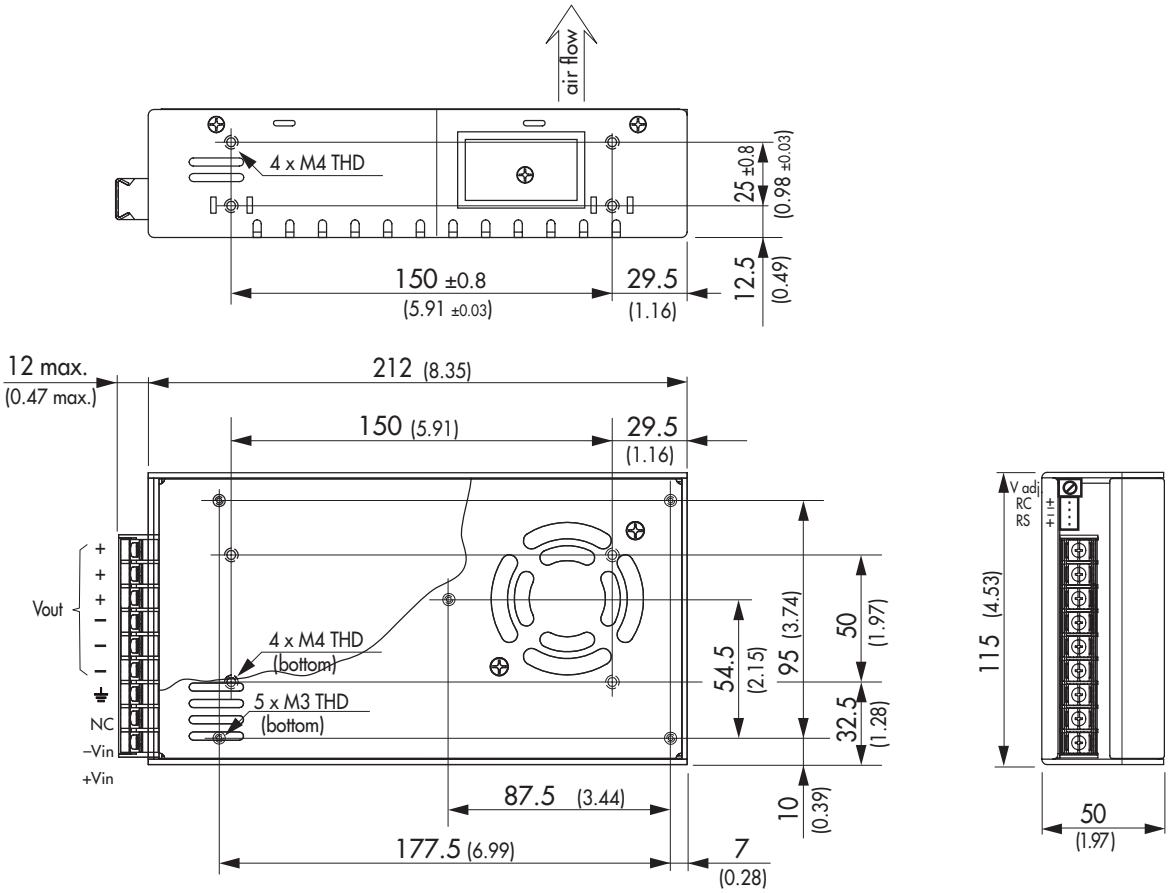

Weight: 1.05 kg (37 oz)

Caution! Max mounting screw penetration: 3.0 mm (0.12)

Dimensions in [mm], () = Inch
Tolerances ±0.8 (0.03)
Monting hole pich tolerances ±0.5 (0.02)

Mouser Electronics

Authorized Distributor

Click to View Pricing, Inventory, Delivery & Lifecycle Information:

TRACO Power:

TZL 100-2412 TZL 100-2424 TZL 060-2424 TZL 300-4824 TZL 150-4824 TZL 100-4812 TZL 060-4812 TZL 100-4824 TZL 300-4812 TZL 150-2412 TZL 060-4824 TZL 060-2412 TZL 150-2424 TZL 150-4812