CUI INC
a bel group

SERIES: PQA50-T | DESCRIPTION: DC-DC CONVERTER

DISCONTINUED

FEATURES

- up to 50 W isolated output
- 2:1 input range (18~36 Vdc, 36~75 Vdc)
- single, regulated output
- 1,500 Vdc isolation
- short circuit, over current, input under voltage protection
- inverse polarity protection
- remote on/off
- operating temperature range (-40~85°C)
- six sided metal shielding
- efficiency up to 91%

MODEL

MODEL	input voltage typ (Vdc)	input voltage range (Vdc)	output voltage (Vdc)	output current min (mA)	output current max (A)	output power max (W)	ripple and noise[1] max (mVp-p)	efficiency typ (%)
PQA50-D24-S3-T[2,*]	24	18~36	3.3	500	10	33	150	89
PQA50-D24-S5-T[2,*]	24	18~36	5	500	10	50	150	91
PQA50-D24-S12-T[2]	24	18~36	12	208	4.167	50	150	91
PQA50-D24-S15-T[2]	24	18~36	15	167	3.333	50	150	91
PQA50-D24-S24-T[2,*]	24	18~36	24	104	2.083	50	150	91
PQA50-D48-S3-T*	48	36~75	3.3	500	10	33	150	89
PQA50-D48-S5-T*	48	36~75	5	500	10	50	150	91
PQA50-D48-S12-T*	48	36~75	12	208	4.167	50	150	91
PQA50-D48-S15-T*	48	36~75	15	167	3.333	50	150	91
PQA50-D48-S24-T*	48	36~75	24	104	2.083	50	150	91

Notes:
1. Ripple and noise are measured at 20 MHz BW by "parallel cable" method with 1 µF ceramic and 10 µF electrolytic capacitors on the output.
2. Model is not CE certified.
3. * Discontinued model.

PART NUMBER KEY

PQA50 - DXX - SXX - TX

- PQA50 — Base Number
- DXX — Input Voltage
- SXX — Output Voltage
- T — Mounting Type: T = Chassis Mount
- X — Heatsink*: "blank" = no heatsink; H = with heatsink

Notes: *Discontinued heatsink versions.

DISCONTINUED

INPUT

parameter	conditions/description	min	typ	max	units
operating input voltage	24 Vdc input models 48 Vdc input models	18 36	24 48	36 75	Vdc Vdc
start-up voltage	input under voltage protection 24 Vdc input models 48 Vdc input models	 18 36			 Vdc Vdc
	input over voltage protection 24 Vdc input models 48 Vdc input models			 36 75	 Vdc Vdc
under/over voltage shutdown	input under voltage protection 24 Vdc input models 48 Vdc input models			 16 32	 Vdc Vdc
	input over voltage protection 24 Vdc input models 48 Vdc input models	 40 81			 Vdc Vdc
surge voltage	for maximum of 1 second 24 Vdc input models 48 Vdc input models	 -0.7 -0.7		 50 100	 Vdc Vdc
start-up time	nominal input, constant load		10		ms
CTRL[1]	models ON (CTRL open or connect TTL high level, 3~12 Vdc)				
	models OFF (CTRL connect GND or low level, 0~1.2 Vdc)				
	input current (models OFF)		6		mA
filter	pi filter				

Note 1. CTRL pin voltage is referenced to GND.

OUTPUT

parameter	conditions/description	min	typ	max	units
line regulation	full load, input voltage from low to high		±0.2	±0.5	%
load regulation	10% to 100% load		±0.5	±1	%
voltage accuracy			±1	±3	%
adjustability			±10		%
switching frequency	PWM mode		320		kHz
transient recovery time	25% load step change		300	500	µs
transient response deviation	25% load step change		±3	±5	%
temperature coefficient	100% load		±0.02		%/°C

PROTECTIONS

parameter	conditions/description	min	typ	max	units
over voltage protection[2]	3.3 Vdc output models 5 Vdc output models 12 Vdc output models 15 Vdc output models 24 Vdc output models		3.9 6.2 15 18 30		Vdc Vdc Vdc Vdc Vdc
over current protection			135		%
short circuit protection	continuous, automatic recovery, hiccup				
over temperature protection			110		°C

Note 2. Module needs to be re-started after over voltage protection.

SAFETY AND COMPLIANCE

parameter	conditions/description	min	typ	max	units
isolation voltage	input to output at 1 mA for 1 minute	1,500			Vdc
isolation resistance	input to output at 500 Vdc	1,000			MΩ
isolation capacitance	input to output at 100 kHz, 0.1 Vdc		2,000		pF
safety approvals	certified to 60950: EN				
conducted emissions	CISPR22/EN55022 class B (external circuit required, see figure 1)				
radiated emissions	CISPR22/EN55022 class B (external circuit required, see figure 1)				
ESD	IEC/EN61000-4-2 class B, contact ± 4kV				
radiated immunity	IEC/EN61000-4-3 class A, 10V/m				
EFT/burst	IEC/EN61000-4-4 class B, ± 2kV (external circuit required, see figure 1)				
surge	IEC/EN61000-4-5 class B, ± 2kV (external circuit required, see figure 1)				
conducted immunity	IEC/EN61000-4-6 class A, 3 Vr.m.s				
voltage dips & interruptions	IEC/EN61000-4-29 class B, 0%-70%				
MTBF	as per MIL-HDBK-217F @ 25°C	1,000,000			hours
RoHS	2011/65/EU				

ENVIRONMENTAL

parameter	conditions/description	min	typ	max	units
operating temperature	see derating curve	-40		85	°C
storage temperature		-55		125	°C
storage humidity	non-condensing	5		95	%
case temperature	at full load, operating temperature curve range			105	°C
vibration	10~55 Hz, 30 min. along x, y, and z			10	G

MECHANICAL

parameter	conditions/description	min	typ	max	units
dimensions	chassis mount: 76.0 x 31.5 x 21.2 chassis mount with heatsink: 76.0 x 31.5 x 25.1				mm mm
case material	aluminum alloy				
weight	chassis mount chassis mount with heatsink		57 65		g g

DISCONTINUED

MECHANICAL DRAWING

CHASSIS MOUNT

units: mm[inch]
tolerance: ±0.50[±0.020]

wire range: 24~12 AWG

PIN CONNECTIONS	
PIN	Function
1	CTRL
2	GND
3	Vin
4	Trim
5	0V
6	+Vo

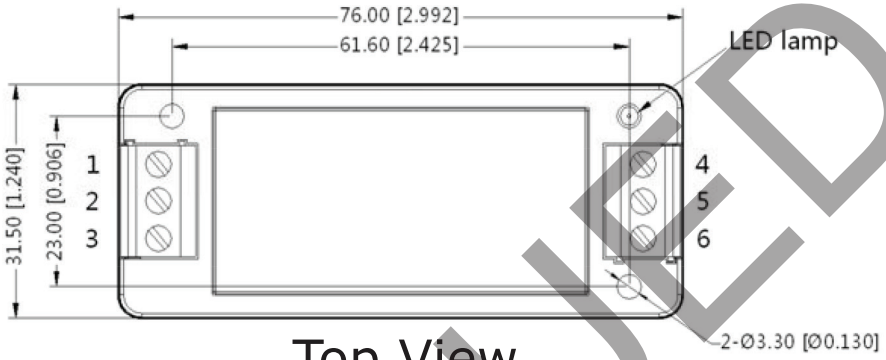

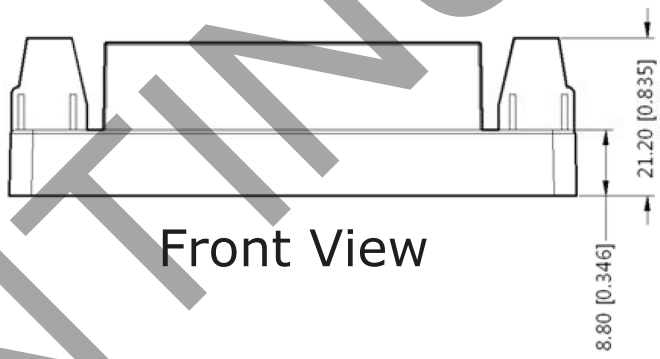

CHASSIS MOUNT WITH HEATSINK

units: mm[inch]
tolerance: ±0.50[±0.020]

wire range: 24~12 AWG

PIN CONNECTIONS	
PIN	Function
1	CTRL
2	GND
3	Vin
4	Trim
5	0V
6	+Vo

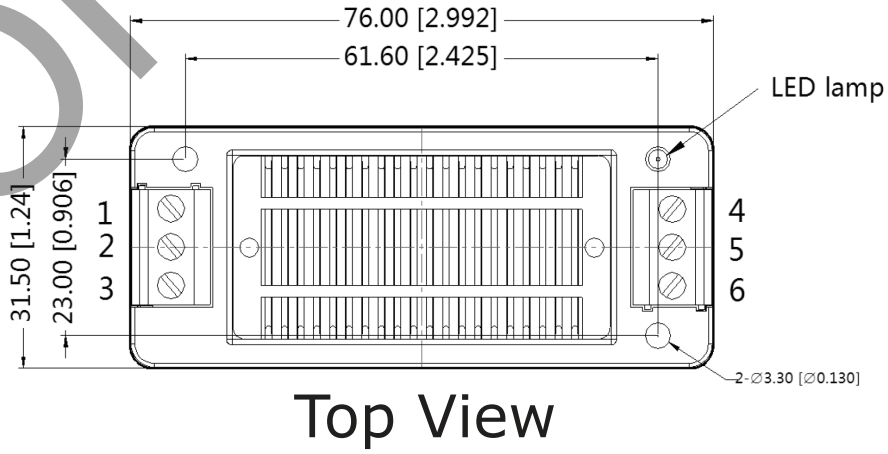

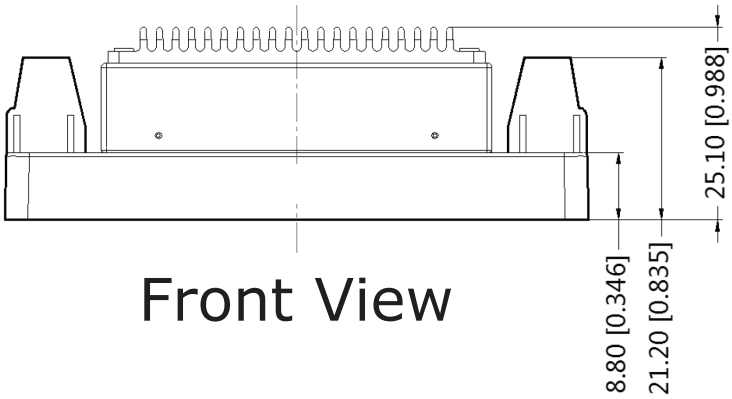

DISCONTINUED

DERATING CURVES

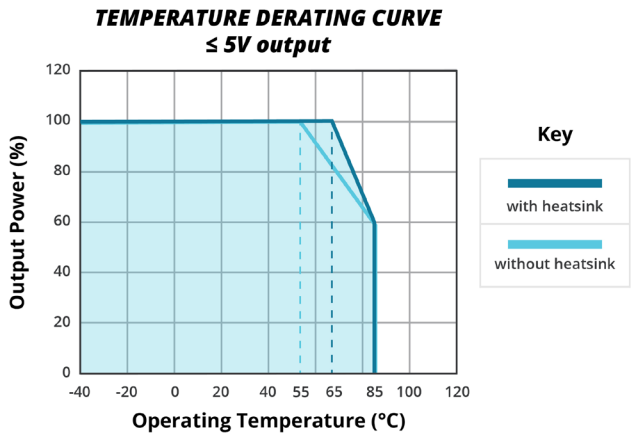

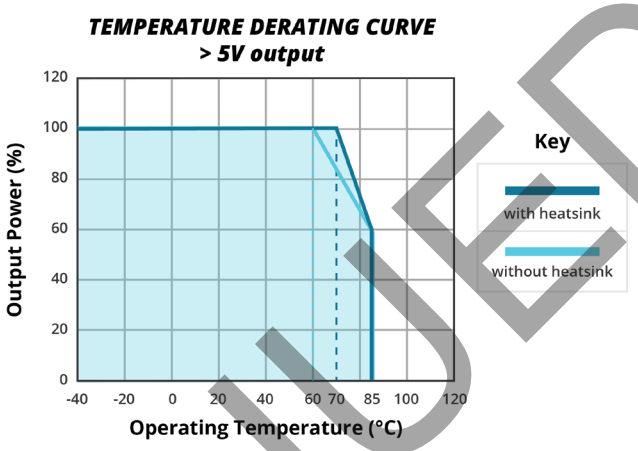

EMC RECOMMENDED CIRCUIT

Figure 1

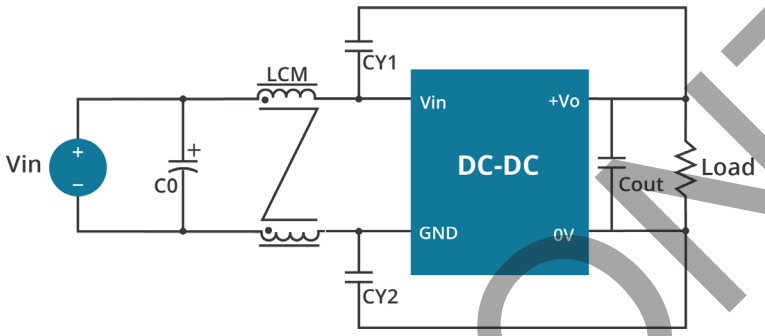

Table 1

Recommended external circuit components		
Vin (Vdc)	24	48
C0	330µF/50V	330µF/100V
CY1, CY2	1nF/2kV	1nF/2kV
LCM	2.2mH	2.2mH

Note: 1. See Table 3 for Cout values.

TEST CONFIGURATION

Figure 2

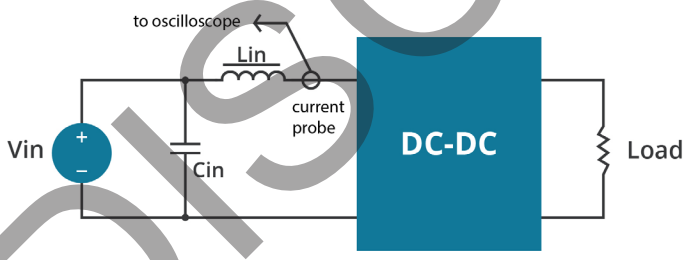

Table 2

External components	
Lin	4.7µH
Cin	220µF, ESR < 1.0Ω at 100 kHz

Note: 1. Input reflected-ripple current is measured with an inductor Lin and Capacitor Cin to simulate source impedance.

DISCONTINUED

APPLICATION NOTES

1. **Requirement on output load**
   To ensure this module can operate efficiently and reliably, the minimum output load cannot be less than 5% of the full load during operation. If the actual output power is small, please connect a resistor at the output end in parallel to increase the load.

2. **Recommended circuit**
   This series has been tested according to the following recommended testing circuit before leaving the factory. This series should be tested under load (see Figure 3). If you want to further decrease the input/output ripple, you can increase capacitance properly or choose capacitors with low ESR (see table 3). However, the capacitance must not exceed the maximum capacitive load or a start-up problem might arise (see table 4).

Figure 3

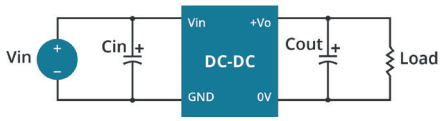

Table 3

Vout (Vdc)	Cin (μF)	Cout (μF)
3.3	100	220
5	100	220
12	100	100
15	100	100
24	100	47

Table 4

Vout (Vdc)	Max. Capacitive Load (μF)
3.3	27000
5	18900
12	3700
15	2000
24	1000

DISCONTINUED

APPLICATION NOTES (CONTINUED)

1. **Output Voltage Trimming**
   Leave open if not used.

Figure 4

Trim up

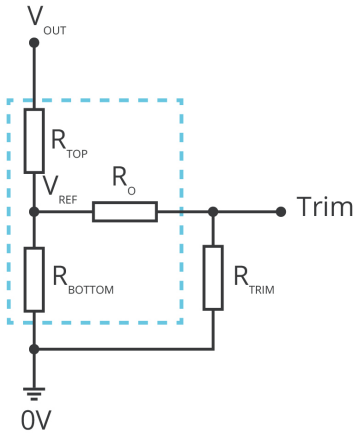

Trim down

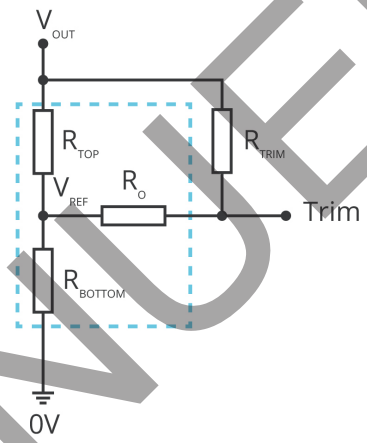

$$R_{TRIM} = \frac{a \cdot R_{BOTTOM}}{R_{BOTTOM} - a} - R_O \qquad a = \frac{V_{REF}}{V_{OUT} - V_{REF}} \cdot R_{TOP}$$

Formula for Trim up

$$R_{TRIM} = \frac{a \cdot R_{TOP}}{R_{TOP} - a} - R_O \qquad a = \frac{V_{OUT} - V_{REF}}{V_{REF}} \cdot R_{BOTTOM}$$

Formula for Trim down

Table 5

V_{OUT}	R_{TOP}	R_{BOTTOM}	R_O	V_{REF}
(Vdc)	(kΩ)	(kΩ)	(kΩ)	(V)
3.3	4.788	2.87	15	1.24
5	2.87	2.87	12.1	2.5
12	11	2.87	22	2.5
15	15	3	22	2.5
24	20	2.308	15	2.5

Note: Value for R_{TOP}, R_{BOTTOM}, R_O, and V_{REF} refer to Table 3 (fixed internal values).
R_{TRIM}: Trim resistance
a: User-defined parameter, no actual meanings
V_{OUT}: Nominal output voltage

DISCONTINUED

Notes:
1. Minimum load shouldn't be less than 5%, otherwise ripple may increase dramatically. Operation under minimum load will not damage the converter, however, they may not meet all specifications listed.
2. Maximum capacitive load is tested at input voltage range and full load.
3. All specifications are measured at Ta=25°C, humidity<75%, nominal input voltage and rated output load unless otherwise specified.

REVISION HISTORY

rev.	description	date
1.0	initial release	01/21/2014
1.01	updated datasheet	07/15/2015
1.02	discontinued heat sink versions	02/07/2019
1.03	company logo updated	03/30/2021
1.04	derating curves and circuit figures updated	08/31/2021
1.05	CE certification removed for 24V models	11/10/2022
1.06	discontinued model PQA50-D24-S24-T, PQA50-D24-S3-T, PQA50-D24-S5-T, PQA50-D48-S12-T, PQA50-D48-S15-T, PQA50-D48-S24-T, PQA50-D48-S3-T & PQA50-D48-S5-T	11/11/2022

The revision history provided is for informational purposes only and is believed to be accurate.

DISCONTINUED

CUI INC
a bel group

Headquarters
20050 SW 112th Ave.
Tualatin, OR 97062
800.275.4899

Fax 503.612.2383
cui.com
techsupport@cui.com

CUI offers a two (2) year limited warranty. Complete warranty information is listed on our website.

CUI reserves the right to make changes to the product at any time without notice. Information provided by CUI is believed to be accurate and reliable. However, no responsibility is assumed by CUI for its use, nor for any infringements of patents or other rights of third parties which may result from its use.

CUI products are not authorized or warranted for use as critical components in equipment that requires an extremely high level of reliability. A critical component is any component of a life support device or system whose failure to perform can be reasonably expected to cause the failure of the life support device or system, or to affect its safety or effectiveness.

Mouser Electronics

Authorized Distributor

Click to View Pricing, Inventory, Delivery & Lifecycle Information:

CUI Inc.:

PQA50-D24-S3-T PQA50-D24-S5-T PQA50-D48-S24-T PQA50-D48-S15-T PQA50-D48-S5-T PQA50-D24-S12-T PQA50-D48-S3-T PQA50-D24-S15-T PQA50-D24-S24-T PQA50-D48-S12-T